Interchangeable Lens Digital Camera
ILME-FX5/ILME-FX5B

WW789166 / WW679476 / WW199569

Help Guide Recommended Pages

How to Use This Help Guide

Describes how to use this Help Guide.

Switching Screens

Switch the screen to display on the LCD monitor using button operations.

Basic Operation Settings

Before shooting, configure the basic operation of the unit.

Recommended Memory Cards

Provides information about the recommended memory cards.

Clip recording/playback time

Provides recording/playback time information when using Sony CFexpress Type A VPG400 960 GB memory cards.

Search for Functions from the Full Menu List

You can browse the list of menu items of the camera. You can jump to the description page from the menu name.

Support Information

ILME-FX5: Support information

Describes basic information about the camera, information about accessories, and FAQ for troubleshooting.

Read This First

How to Use This Help Guide
Checking the Unit and Supplied Accessories
Safety Precautions
Usage Precautions

Lending, Transferring, or Discarding the Camera or Memory Cards (notes on protecting private information)

Notes on the Battery Pack and Charging the Battery

Notes on Memory Cards

Cleaning the Image Sensor ([Sensor Cleaning])

Cleaning

Name of Parts

System Configuration

Left Side / Front Side

Right Side

Rear Side

Top Side

Bottom Side

XLR handle unit (ILME-FX5 only)

Using the Touch Panel

Switching Screens

Shooting Screen / Playback Screen

Home Screen

User Functions Screen

Menu Screen

Preparation

Preparing a Power Supply

- Inserting/Removing the Battery Pack
- Charging the Battery using the Supplied Charger
- Charging the Battery using a USB PD Compatible Device
- Using the Camera with a USB Power Supply
- Switching the Power On/Off
- Battery Usage Time

Basic Configuration

- Date and Time
- Accessibility Functions
- Configuring Basic Operation

Setting the Auto Power Off Function
Shooting Mode
Recording Format

Attaching Devices

Attaching/Removing a Lens
Attaching the XLR Handle Unit (ILME-FX5 only)
Attaching a Viewfinder (sold separately)
Attaching a Microphone (sold separately)

Adjusting the LCD Monitor/Viewfinder

Adjusting the Angle of the LCD Monitor
Adjusting the Brightness of the LCD Monitor
Magnifying the LCD Monitor Screen Display
Adjusting the Angle of the Viewfinder (sold separately)
Adjusting the Brightness of the Viewfinder (sold separately)

Switching Between the LCD Monitor/Viewfinder Display

Using Memory Cards

Memory Cards
Recommended Memory Cards
Clip Recording/Playback Time
Inserting a Memory Card
Ejecting a Memory Card
Initializing Memory Cards
Checking the Remaining Recording Time
Restoring Memory Cards

Shooting

Basic Shooting Procedure

Adjusting the Zoom

Selecting the Type of Zoom
Setting the Rotation Direction of the Zoom Ring
Zooming using the Zoom Lever
Setting the Zoom Speed of the Bluetooth Remote Control

Adjusting the Focus

- Adjusting the Focus Manually
- Focusing using Touch Operation
- Using Auto Focus Temporarily
- Fast Auto Focus (Single AF (AF-S))
- Focusing using Magnified View
- Adjusting the Focus Automatically
- Setting the Auto Focus Area/Position
- Changing the Focus Area Quickly
- Moving the Focus Area Frame using Touch Operation
- Adjusting the Auto Focus Action (AF Transition Speed, AF Subject Shift Sensitivity)
- Changing the Focus Target Manually
- Using Manual Focus Temporarily
- Detecting and Tracking a Subject
- Tracking a Specified Subject
- Starting Realtime Tracking AF
- Stopping Realtime Tracking AF
- Focus Map
- Notes on Shooting

Adjusting the Brightness

- Selecting the Base Sensitivity
- Adjusting the Iris
- Adjusting the Gain
- Dual Gain
- Adjusting the Shutter

Adjusting the White Balance

- Adjusting the White Balance Automatically
- Adjusting the White Balance Manually

Configuring Image Stabilization

- Using Image Stabilization

Configuring Audio

- Setting the Audio to Record using the XLR Handle Unit (ILME-FX5 only)

- Selecting Audio Input Devices on the XLR Handle Unit (ILME-FX5 only)
- Reducing Noise using the LOW CUT function of the XLR Handle Unit (ILME-FX5 only)
- Adjusting the Audio Recording Level using the XLR Handle Unit (ILME-FX5 only)
- Selecting the Input Audio to Output to Each Channel of the Camera using the XLR Handle Unit (ILME-FX5 only)
- XLR Handle Unit (ILME-FX5 only) Inputs and Multi Interface Shoe Output Channels
- Setting the Audio to Record on the Unit
- Selecting Audio Input Devices on the Unit
- Reducing Noise using Filter Functions
- Adjusting the Audio Recording Level using the Unit
- Saving Separate Audio WAV Files (when XLR handle unit is attached)

Using Shooting Functions

- Direct Menu
- Assignable Buttons
- Assignable Dial
- Multi-Function Dial
- Selecting Fixed/Variable Frame Rate (Slow & Quick Motion)
- Recording Video Intermittently (Interval Rec)
- False Color
- Recording to Both Memory Cards A and B
- Video Signal Monitor
- Gamma Display Assist Function
- Clip Flags
- Breathing Compensation
- Distortion Compensation
- Configuring De-Squeeze Display
- Setting the Clock Automatically
- Recording Location Data

Proxy Recording

- Proxy Recording

Shooting with the Desired Look

- Selecting a Look
- Importing a Desired Base Look

Deleting a Base Look
Customizing a Look
Storing a Look as a Scene File
Renaming a Scene File
Sharing the Look with Another Camera
Saving a Scene File from Internal Memory to a Memory Card
Loading a Scene File Saved on a Memory Card into Internal Memory

Shooting with Look Adjustment in Post-Production

Applying a LUT to the Output Video
Changing the LUT
Changing the Distribution of Dark and Bright Areas in the Recorded Video Information
Recording a 3D LUT File as Metadata

Shooting RAW Video

Recording the HDMI Output Video
Recording Status Indicator

Connecting to a Network

Network Functions

Using “Monitor & Control”

Connecting with “Monitor & Control”

Connecting to the Internet

Connecting to the Internet via Wireless LAN
Connecting to the Internet via USB Tethering
Connecting to the Internet via Wired LAN

Using Creators' App for Enterprise

Transferring Files to “C3 Portal”

Transferring Files

Preparing to Transfer Files

Selecting and Transferring a Clip

Transferring Clips Automatically

Transferring using Secure FTP

Streaming

Playing a Clip

Structure of the Clip List Screen

Playback Operation Screen

Playing a Clip

Clip Operations

Changing Settings

Searching for Functions from the Full Menu List

Full Menu Operations

Entering a Character String

Using the Screen Reader

Magnifying the Screen Display

Configuring Full Menu Functions

- [Shooting] Menu
- [Project] Menu
- [Paint/Look] Menu
- [TC/Media] Menu
- [Monitoring] Menu
- [Audio] Menu
- [Clip Operations] Menu
- [Technical] Menu
- [Network] Menu
- [Maintenance] Menu
- [ISO/Gain] Settings and Default Values
- [AGC Limit] Settings and Default Values
- [Video Format] / [Quality] / [Bit Rate] Settings
- Image Quality Settings Saved for Each Shooting Mode
- Saving Settings to a File

Using External Devices

Using a Monitor and Recording Devices

- Connecting an External Device to the HDMI Output
- Synchronizing Timecode with an External Device

Using a Remote Controller

- Using a Mobile Device
- Using a Bluetooth Remote Control
- Remote Control via USB Connection Mode

Using a Computer

- Managing/Editing Clips using a Computer

Output Formats

HDMI Output Connector Output Formats

Appendix

Troubleshooting

Error/Warning Messages

Items Saved in Files

Block Diagrams

Updating E-Mount Lens Software

Licenses

Specifications

5-076-802-11(2) Copyright 2026 Sony Corporation

Interchangeable Lens Digital Camera
ILME-FX5/ILME-FX5B

How to Use This Help Guide

This Help Guide describes the functions of the unit and how to use the unit. Use the Help Guide to find the information you want about using this unit.
(The images provided in this Help Guide are for reference only. They may vary from the actual unit.)

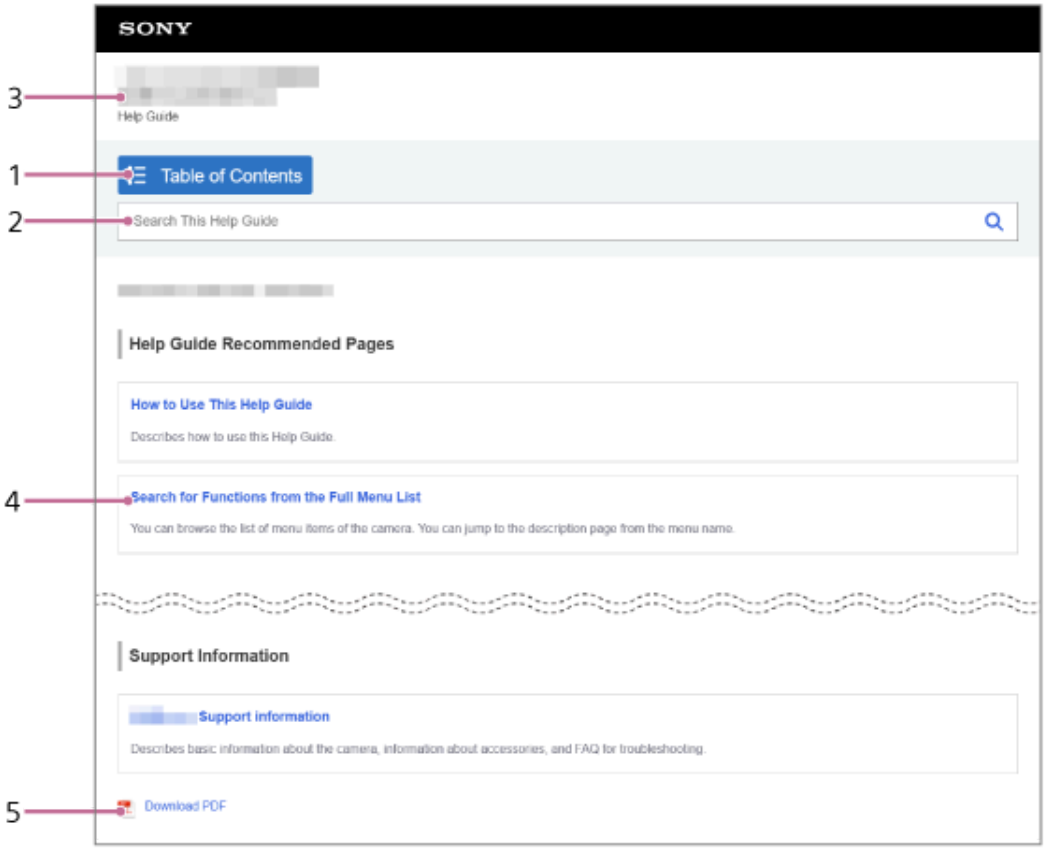

1. **Table of contents**
   Click Table of Contents (Table of Contents) to display the Table of Contents.

2. **Search box**
   Enter keywords to search for corresponding information.

3. **Return to top page**
   Click the model name at the top of the screen to jump to the top page.

4. **Full menu list**
   Jump to the description page for each menu from the "Searching for Functions from the Full Menu List" link on the top page.

5. **Download the Help Guide in PDF format**
   Click "Download PDF" at the bottom left of the top page.

Hint

- The Startup Guide supplied with the unit contains important precautions when using the unit. Read together with this document.

TP1002215239

5-076-802-11(2) Copyright 2026 Sony Corporation

Checking the Unit and Supplied Accessories

This Help Guide describes models with different supplied accessories. The differences in supplied accessories are given below.

Model name	XLR handle unit and handle shoe cap
ILME-FX5	Supplied For details about the XLR handle unit, see “Attaching the XLR Handle Unit (ILME-FX5 only).”
ILME-FX5B	Not supplied

If any item is missing, contact the store where you purchased the unit.
Numbers in parentheses indicate quantity.

- Camera (1)
- BC-SAD1 battery charger (1)
- NP-SA100 rechargeable battery pack (1)
- Body cap (attached to unit) (1)
- Shoe cap (attached to unit) (1)
- VF terminal protect cap (attached to unit) (1)
- XLR-H2 XLR handle unit (ILME-FX5 only) (1)
- Accessory shoe kit (accessory shoe (1), accessory shoe plate (1), screws (4)) (ILME-FX5 only) (1)
- Handle shoe cap (supplied with XLR handle unit) (ILME-FX5 only) (1)
- Startup Guide (1)

Note

- The XLR-H1 XLR handle unit (sold separately) cannot be attached to the unit.
- Supplied accessories may vary depending on the country or region. For details about supplied accessories, refer to the Startup Guide.

TP1002308570

5-076-802-11(2) Copyright 2026 Sony Corporation

Safety Precautions

To prevent injury or electric shock due to improper use, as well as damage to property such as fire, be sure to observe the following.

⚠ Danger

To avoid serious injury, burns, or fire due to leakage, overheating, ignition, or explosion, or accidental ingestion, read the following precautions carefully.

Rechargeable battery pack model

Battery pack

- **If handled improperly, the battery may explode and cause a fire or chemical burns. Observe the following precautions:**
  - Do not disassemble or modify the battery pack.
  - Do not apply shock or force to the battery pack, such as by hitting with a hammer, stepping on, or dropping.
  - Do not short-circuit the battery pack or allow the battery pack to come into contact with any metal objects, such as paperclips.
  - Do not leave the battery pack in locations where the temperature may reach 60 °C (140 °F) or higher, such as in a car parked under direct sunlight.
  - Do not dispose of battery packs in fire or incinerate them.
  - Do not use leaking or damaged lithium-ion batteries.
  - Do not charge the battery pack in any manner other than that specified.
  - Keep the battery pack out of reach of infants and children.
  - Do not get wet.
  - Only use genuine Sony batteries.
  - Recycle used batteries.
  - Do not leave the battery pack in extremely cold environments at −20 °C (−4 °F) or lower, or in extremely low-pressure environments at 11.6 kPa or lower.

Coin battery / button cell

- **Do not swallow coin batteries or button cells. They can cause chemical burns.**
  - The unit has a built-in or supplied coin battery or button cell. If you swallow a coin battery or button cell, death or serious injury may occur. A swallowed coin battery or button cell can cause internal chemical burns in as little as 2 hours.
  - Keep new and used batteries out of reach of children. If the battery cover does not close securely, stop using the camera and keep it out of the reach of children.
  - Seek immediate medical attention if a battery is suspected to have been swallowed or inserted inside any part of the body.
- **Do not charge coin batteries or button cells.**
- **If the battery leaks, observe the following.**
  - Immediately remove the battery away from any sources of fire. There is a risk of fire or explosion due to leaked liquid or gas from the battery igniting.
  - If leaked liquid gets into your eyes, do not rub them. Instead, immediately wash them thoroughly with clean water and seek medical attention.
  - If you get leaked liquid in your mouth or lick it, immediately rinse your mouth with water and seek medical attention.
  - If leaked liquid gets on your body or clothes, rinse it off thoroughly with water.

⚠ Warning

If you do not observe the following precautions, fire, serious injury, or death may occur.

- **Do not disassemble or modify the unit.**
  - Doing so may result in fire or electric shock. For inspection or repair, consult your dealer or local authorized service facility.
- **Do not allow water or any objects (such as metal or flammable objects) to get inside the unit.**
  - Doing so may result in fire or electric shock. If water or other objects get into the unit, immediately turn if off and remove the battery. Unplug the AC adaptor and battery charger from the power outlet, and then consult your dealer or local authorized service facility.
- **Do not use the unit while driving.**
  - Do not shoot or play back images or look at the monitor while driving a car or motorcycle, etc. Doing so may result in a traffic accident.
- **Pay attention to your surroundings while shooting.**
  - Do not shoot images without being aware of your surroundings. Doing so may cause accidents or injuries.
- **Do not touch a powered AC adaptor, powered battery charger, or charging battery for long periods of time.**
  - Even if the unit or its accessories do not feel hot to you while using them, leaving the same part of the skin exposed to them for a long time may cause low-temperature burns, resulting in redness and blisters.
- **Do not damage cables.**
  - Placing cables near a heater, or heating or attempting to modify cables may cause a fire or electric shock. When unplugging cables, always hold the plug to avoid damaging the cord.
- **Do not use the unit with wet hands.**
  - Doing so may cause an electric shock.
- **Attach the battery pack, the shoulder belt, and the strap correctly.**
  - If these are not attached correctly, the unit may fall and cause an injury. Also, make sure that the belt or strap is not damaged before use. Attach a shoulder belt (sold separately) and strap (sold separately) correctly as described in the operating instructions.

⚠ Caution

To prevent injury or damage to property, be sure to observe the following.

- **Do not use the unit in high-humidity locations where water droplets may fall, or in locations exposed to a lot of dust, oily smoke, or steam.**
  - Doing so may cause a fire or electric shock.
- **Do not place the unit in an unstable location.**
  - Placing the unit on an unstable or tilted surface, or using a tripod in an unstable position may cause the unit to fall or tip over and result in injury.
- **Do not cover the air vents.**
  - If the air vents are blocked during use, heat will accumulate inside the unit and may cause a fire or malfunction.
- **Do not cover the unit with a cloth while in use.**
  - Doing so may cause heat to build up inside, resulting in deformation of the case, fire, or electric shock.

- **Do not subject the lens or monitor to impacts.**
  - The lens and monitor are made of glass and may break if subjected to a strong impact, resulting in injury.
- **When using headphones, do not listen at high volume for long periods of time.**
  - Listening at high volume for long periods of time may have a detrimental effect on your hearing.
- **Do not leave the lens under direct sunlight.**
  - Sunlight may focus through the lens and cause a fire.
- **Be careful handling the unit when using it with other accessories attached via brackets, etc.**
  - Not doing so may cause an unexpected accident due to falling, etc.
- **Disconnect the unit from the power source if not intending to use the unit for an extended period.**
  - If you will not use the unit for an extended period of time, unplug the power cord from the power outlet and remove the battery from the unit before storing it.

TP1002274766

5-076-802-11(2) Copyright 2026 Sony Corporation

Usage Precautions

Refer also to “Notes on use” in the Startup Guide (supplied) for the unit.

Use of environmentally-conscious packaging materials

Environmentally-conscious packaging materials were used for the camera and supplied accessories. Due to the characteristics of the packaging materials, note the following points.

- Powder, etc. from the packaging materials may adhere to the camera or supplied accessories. In this case, remove it with a commercially available blower or cleaning paper before use.
- The packaging materials will deteriorate with continuous use. Be careful when carrying the product using the packaging.

Data specifications

- The data on performance and specifications in this Help Guide are based on an ambient temperature of 25 °C (77 °F), except where otherwise indicated.
- For the battery pack, the data are based on a battery pack that was fully charged until the charging lamp turned off.

Notes on operating temperature

- Shooting in extremely cold or hot environments that exceed the operating temperature range is not recommended.
- Under high ambient temperatures, the temperature of the camera rises quickly.
- When the temperature of the camera rises, the image quality may deteriorate. It is recommended that you wait until the temperature of the camera drops before continuing to shoot.
- Depending on the camera and battery temperature, the camera may become unable to record video or the power may turn off automatically to protect the camera. A message will be displayed on the monitor before the power turns off or if you can no longer record video. In this case, leave the power off and wait until the camera and battery temperature goes down. If you turn on the power without letting the camera and battery cool sufficiently, the power may turn off again, or you may still be unable to record video.

Precautions regarding long-duration/high-load shooting

- During use, the camera and battery may become warm. This is not a malfunction.
- The shooting time may be shorter under low temperature conditions, depending on the following shooting settings, recording method, and connected accessories. Warm up the battery pack or replace it with a new battery.
  - Shooting video at high bit rates, such as 4K
  - Using multiple memory cards
  - Using network functions, such as Wi-Fi and LAN
  - Using a mount adaptor with power supplied from the unit or using Multi Interface Shoe compatible audio accessories, etc.

Notes on playing movies on other devices

- XAVC HS, XAVC S, and X-OCN video can only be played back on compatible devices.
- When playing back video files that were recorded on the unit at 96 kHz or in 32-bit float format using a camera, use a camera that supports 96 kHz or 32-bit float recording. Correct playback on an unsupported camera may not be possible.

Notes on recording/playback

- Always make a test recording, and verify that it was recorded successfully. SONY WILL NOT BE LIABLE FOR DAMAGES OF ANY KIND INCLUDING, BUT NOT LIMITED TO, COMPENSATION OR REIMBURSEMENT ON ACCOUNT OF FAILURE OF THIS UNIT OR ITS RECORDING MEDIA, EXTERNAL STORAGE SYSTEMS OR ANY OTHER MEDIA OR STORAGE SYSTEMS TO RECORD CONTENT OF ANY TYPE.
- Always verify that the unit is operating properly before use. SONY WILL NOT BE LIABLE FOR DAMAGES OF ANY KIND INCLUDING, BUT NOT LIMITED TO, COMPENSATION OR REIMBURSEMENT ON ACCOUNT OF THE LOSS OF

PRESENT OR PROSPECTIVE PROFITS DUE TO FAILURE OF THIS UNIT, EITHER DURING THE WARRANTY PERIOD OR AFTER EXPIRATION OF THE WARRANTY, OR FOR ANY OTHER REASON WHATSOEVER.
- SONY WILL NOT BE LIABLE FOR THE LOSS, REPAIR, OR REPRODUCTION OF ANY DATA RECORDED ON THE INTERNAL STORAGE SYSTEM, RECORDING MEDIA, EXTERNAL STORAGE SYSTEMS OR ANY OTHER MEDIA OR STORAGE SYSTEMS.
- SONY WILL NOT BE LIABLE FOR CLAIMS OF ANY KIND MADE BY USERS OF THIS UNIT OR MADE BY THIRD PARTIES.
- SONY WILL NOT BE LIABLE FOR THE TERMINATION OR DISCONTINUATION OF ANY SERVICES RELATED TO THIS UNIT THAT MAY RESULT DUE TO CIRCUMSTANCES OF ANY KIND.
- The image displayed on the shooting standby screen may differ from the actual recorded result.
- Playback of images recorded with the unit on other equipment and playback of images recorded or edited with other equipment on the unit are not guaranteed.
- Sony can provide no guarantees in the event of failure to record, or loss of or damage to recorded images or audio data, due to a malfunction of the camera or recording media, etc. We recommend backing up important data.
- Once you format the memory card, all the data recorded on the memory card will be deleted and cannot be restored. Before formatting, copy the data to a computer or other device.
- Attach the shoulder strap to the camera to prevent it from falling.
- When using the unit with a tripod or grip, be sure to attach the camera securely.
- We cannot guarantee correct operation when accessories from other manufacturers are attached.

Notes on using a tripod

When attaching to a tripod, use a tripod with a screw of length 5.5 mm or shorter. If you use a screw that is longer than 5.5 mm, you will not be able to firmly secure the unit to the tripod, and the unit may be damaged.

Notes on handling memory cards

- The temperature of memory cards may rise after recording stops. This is not a malfunction.
- If [Media Temperature High] is displayed on the monitor, do not remove the memory card from the camera right away. Instead, wait for a while after turning off the unit, and then remove the memory card. If you touch the memory card while it is hot, you may drop it and the memory card may become damaged. Be careful when removing the memory card.

Backing up memory cards

Data may be corrupted in the following cases. Be sure to back up the data for protection.

- When the memory card is removed, the USB cable is disconnected, or the unit is turned off in the middle of a read or write operation
- When the memory card is used in locations subject to static electricity or electrical noise

Database file error

- If you insert a memory card that does not contain an image database file into the unit and turn on the power, the unit automatically creates an image database file using some of the memory card’s capacity. The process may take a long time and you cannot operate the product until the process is completed.
- If a database file error occurs, export all the data to your computer, etc. to save it, and then format the memory card using the unit.

Do not use/store the product in the following places

- In an extremely hot, cold or humid place
  In places, such as in a car parked in the sun, the camera body may become deformed and this may cause a malfunction.
- Storing under direct sunlight or near a heater
  The camera body may become discolored or deformed, and this may cause a malfunction.
- In a location subject to rocking vibration
  It may cause malfunctions and an inability to record data. In addition, the recording media may become unusable, and recorded data may be corrupted.
- Near strong magnetic place
- In sandy or dusty places
  Be careful not to let sand or dust get into the unit. This may cause the unit to malfunction, and in some cases this malfunction cannot be repaired.
- In places with high humidity
  This may cause molding in the lens.

- In areas where strong radio waves or radiation are being emitted
  Recording and playback may not function correctly.

On condensation

- If the product is brought directly from a cold to a warm location, moisture may condense inside or outside the unit. This moisture condensation may cause a malfunction of the product.
- To prevent moisture condensation when you bring the unit directly from a cold to a warm location, first put it in a plastic bag and seal it to prevent air from entering. Wait for about an hour until the temperature of the product has reached the ambient temperature.
- If condensation occurs, turn off the unit and wait until the condensation clears before operating the unit. If moisture condensation occurs, turn off the unit and wait about an hour for the moisture to evaporate. Note that if you attempt to shoot with moisture remaining inside the lens, you will be unable to record clear images.

Notes on carrying

- Do not hold, hit, or apply excessive force to the following parts, if your camera is equipped with them:

  - Lens section
  - Movable monitor

- Do not carry the camera with a tripod attached. This may damage the tripod socket hole.
- Do not sit down in a chair or other place with the camera in the back pocket of your trousers or skirt, as this may cause malfunction or damage the camera.

Notes on handling the unit

- The unit (including accessories) has magnet(s) which may interfere with pacemakers, programmable shunt valves for hydrocephalus treatment, or other medical devices. Do not place the unit close to persons who use such medical devices. Consult your doctor before using the unit if you use any such medical device.
- Do not leave the unit, accessories, memory cards, etc. within reach of small children. They might accidentally swallow it. If swallowed, consult a doctor immediately.
- Increase the volume gradually. A sudden loud noise may occur, potentially damaging your ears. Be especially careful when listening using headphones.
- Even if the unit or its accessories do not feel hot to you when shooting/streaming for an extended period, leaving the same part of the skin exposed to them for a long time may cause low-temperature burns, resulting in redness and blisters. Exercise care in the following cases, and use a tripod or similar equipment.

  - When using high-temperature environments
  - When used by people with poor blood circulation or sensitive skin
  - When using with [Auto Power Off Temp.] set to [High]

- When shooting/streaming for an extended period, do not leave your hands in the areas near the air ventilation holes. It may cause low-temperature burns.
- Although the unit is designed and built to be dustproof and drip-proof, it cannot completely prevent the ingress of dust or water droplets.
- Before you connect the cable to the connector, be sure to check the orientation of the connector. Then, insert the cable straight. Do not insert or remove the cable forcefully. This may cause the connector terminals to break.
- The unit uses magnetic parts that include magnets. Do not bring objects affected by magnetism, including credit cards and floppy disks, close to the camera.

Storage

- Always attach the lens front cap or body cap when you are not using the unit. To prevent dust or debris from getting inside the unit, remove dust from the body cap before attaching it to the unit.
- If the unit is dirty after use, clean it. Water, sand, dust, salt, etc. left in the unit may cause a malfunction.

Notes on lenses

- Do not look at the sun or strong light through a removed lens. It may cause irreversible damage to your eyes.
- When changing lenses, check the monitor screen to make sure everything is operating properly.
- When using a power zoom lens, be careful not to get your fingers or any other objects caught in the lens. (Only for models with a power zoom feature or interchangeable lens cameras)

- Do not leave the lens facing the sun or other strong light source. The light will be focused by the lens and may cause smoke, fire, or other damage to the inside of the body or lens.
- If you must place the unit under a light source such as sunlight, attach the lens cap to the unit.
- If sunlight or a strong light source enters the camera through the lens, it may focus inside the camera and cause smoke or fire. Attach the lens cap to the lens when storing the unit. When shooting with backlighting, keep the sun sufficiently far away from the angle of view. Note that smoke or fire may occur even if the light source is slightly away from the angle of view.
- Do not directly expose the lens to beams, such as laser beams. That may damage the image sensor and cause the camera to malfunction.
- If the subject is too close, the image may show any dust or fingerprints on the lens. Wipe the lens with a soft cloth, etc.

Notes on the Multi Interface Shoe

- When attaching or detaching accessories to or from the Multi Interface Shoe, first turn off both the accessory and the camera. When attaching an accessory, confirm that it is firmly fastened to the unit.

Notes on the monitor

- If the monitor is damaged, stop using it immediately. There is a risk of injury, such as cuts to your hands or face from the damaged areas.
- The monitor is manufactured with high-precision technology, giving a functioning pixel ratio of at least 99.99%. Thus a very small proportion of pixels may be “stuck”, either always off (black), always on (red, green, or blue), or flashing. This is not a malfunction. Note that any such problems have no effect on recorded data.
- Do not press hard against the monitor. This may cause unevenness in the color which may cause a malfunction.
- If the monitor has drops of water or other liquids on it, wipe it with a soft cloth. If the monitor stays wet, the surface of the monitor may change or deteriorate. This may cause a malfunction.
- If you use the unit in a cold location, the image may have a trailing appearance. This is not a malfunction.
- When connecting cables to the connectors on the camera, the rotating range of the monitor may become limited.

Notes on the image sensor

- If you point the camera at an extremely strong light source while shooting images with a low sensitivity setting, highlighted areas in the images may be recorded as black areas.
- If you point the camera at an extremely strong light source while shooting images, highlighted areas in the images may be recorded as black areas.
- The following phenomena that may occur in images are specific to image sensors. They do not indicate a malfunction.
  White flecks
  Although the image sensors are produced with high-precision technologies, fine white flecks may be generated on the screen in rare cases, caused by cosmic rays, etc.
  This is related to the principle of image sensors and is not a malfunction.
  The white flecks especially tend to be seen in the following cases:

  - When operating at a high environmental temperature
  - When you have raised the gain (sensitivity)

  Flicker
  If shooting under lighting produced by fluorescent lights, sodium lamps, mercury-vapor lamps, or LEDs, the screen may flicker or colors may vary.

Notes on the cooling fan

- Do not cover the air vent. The design ensures ventilation even when the monitor is closed.
- The air vent may become hot.
- Do not use the unit in areas where there are dust or sand particles in the air.
- When the cooling fan is operating, be careful that foreign objects are not sucked in by the fan.
- If the cooling fan emits abnormal noises, stop using the unit and contact a service facility.

Notes on the XLR handle unit (only for models supplied with the XLR handle unit)

- Before connecting/disconnecting an external microphone or device to/from the INPUT1 or INPUT2 connector, be sure to set the INPUT1 (LINE/MIC/MIC+48V) or INPUT2 (LINE/MIC/MIC+48V) switch to a position other than “MIC+48V.”
  Plugging/unplugging a cable into/from an external microphone or device while the switch is set to “MIC+48V” may cause loud noise or a malfunction of the device.

- While recording is in progress, operating and handling noises from the camera or lens may be recorded. Touching the handle while recording is in progress will cause noise to be included in the recording.
- While recording is in progress, do not change the INPUT1 or INPUT2 switch settings.
- If the microphone of the handle is in proximity to a speaker, acoustic feedback may occur. In this case, move the handle away from the speaker to allow the maximum distance between the microphone and the speaker, or lower the speaker volume.
- If dust or water droplets are present on the surface of the microphone, successful recording may not be possible. Be sure to clean the microphone surface before using the handle.
- Turn off the camera before attaching or removing the handle.
- When attaching the XLR handle unit, firmly tighten the two handle attachment screws.
  Using the handle without fastening the handle attachment screws may damage the Multi Interface Shoe contacts or cause the camera to fall off.

About smartphone/computer applications

The application specifications are subject to change without notice.

Services and software provided by other companies

Network services, content, and software (including the operating system) of the unit may be subject to individual terms and conditions and changed, interrupted or discontinued at any time and may require fees, registration and credit card information.

Notes on connecting to the Internet

- The unit cannot be connected to an access point that uses only WEP or WPA, which are security methods that have vulnerabilities, using the wireless LAN function.
- The unit is not a network device (for example, a router or switching hub). It is strongly recommended that you connect the unit to a network where you can configure and manage the network settings appropriately to protect against network-based attacks, such as DoS attacks (Denial of Service attacks).
- When connecting the unit to a network, connect it via a router that is configured and managed appropriately, or connect it to a LAN port that has the same functionality. If connected without such protection (for example when using free Wi-Fi), problems may occur. When properly configured, routers provide sufficient protection against DoS attacks or loss of functionality of devices in the network. If you notice anything unusual, immediately disconnect the camera from the network.

Notes on security

- If you set the [Security] wireless LAN setting to [None] and connect to an access point, wireless communication between the camera and the access point will not be encrypted and may be intercepted by a third party within the range of the signal. Use the WPA3 or WPA2 security protocol for enhanced security.
- SONY WILL NOT BE LIABLE FOR DAMAGES OF ANY KIND RESULTING FROM A FAILURE TO IMPLEMENT PROPER SECURITY MEASURES ON TRANSMISSION DEVICES, UNAVOIDABLE DATA LEAKS RESULTING FROM TRANSMISSION SPECIFICATIONS, OR PROBLEMS OF ANY KIND.
- Depending on the operating environment, unauthorized third parties on the network may be able to access the unit. When connecting the unit to the network, be sure to confirm that the network is protected securely.
- When connecting this product to a network, connect via a system that provides a protection function, such as a router or firewall. If connected without such protection, problems may occur.

About optional accessories

- It is recommended that you use genuine Sony accessories.
- Some products may not be available, depending on the country or region.
- When attaching accessories, use screws that are appropriate for the depth of the screw holes. Use of screws that are too long may damage exterior parts.

Available models and kits

Some products may not be available, depending on the country or region.

TP1002215240

5-076-802-11(2) Copyright 2026 Sony Corporation

Lending, Transferring, or Discarding the Camera or Memory Cards (notes on protecting private information)

Important information may be recorded on the camera and/or memory card, depending on the used functions and camera settings.
Before lending, transferring, or discarding the camera and/or memory cards, be sure to read the following and make sure that you have completed the procedures.

Notes on lending, transferring, or discarding the unit

Before lending, transferring, or discarding the unit, be sure to perform the following operations to protect private information.

- [Maintenance] – [All Reset] – [Reset to Factory Defaults] in the full menu

When you initialize the unit, the following information is deleted:

- Root certificate (RTMP)
- Root certificate (FTP)
- Access point information
- Access authentication information
- FTP server settings
- Network streaming connection information
- Certificates for digital signatures
- User base looks/LUTs
- Scene files

Notes on lending, transferring, or discarding memory cards

Formatting or deleting data on a memory card using the unit or a computer may not completely erase the data on the memory card. Before lending or transferring a memory card, we recommend that you delete any data on it completely using data deletion software on a PC. When discarding a memory card, we recommend that you physically destroy it.

Notes on network functions

When you use network functions, unintended third parties on the network may be able to access the unit, depending on the usage environment. For example, unauthorized access to the unit may occur in network environments to which another network device is connected or can connect without permission. Sony bears no responsibility for any loss or damage caused by connecting to such network environments.

Notes on location information

If you publish or share videos shot with the unit on the Internet while location data is linked using the “Creators’ App for Enterprise” application, the shooting location may be unintentionally made known to third parties. To avoid this issue, set [Technical] – [GPS] – [Location by Mobile App] to [Off] in the full menu of the unit before shooting.

Warning on copyrights

Anything shot using the camera that is prohibited under copyright law, other than for personal enjoyment, may not be used without permission from the copyright holder. Unauthorized recording of such materials may be contrary to the provisions of the copyright laws.

TP1002274767

5-076-802-11(2) Copyright 2026 Sony Corporation

Notes on the Battery Pack and Charging the Battery

Notes on using the battery pack

- Always use genuine Sony batteries.
- The correct remaining battery indication may not be displayed under some operating or environmental conditions.
- Do not expose the battery pack to water. Be careful not to get it wet with water or other liquids.
- Do not leave the battery pack in extremely hot places, such as in a car or under direct sunlight.

Notes on charging the battery pack

- Charge the battery pack (supplied) before using the unit for the first time.
- The charged battery pack will discharge little by little even if you do not use it. Charge the battery pack each time before you use the unit so that you do not miss any opportunities to shoot images.
- Do not charge battery packs, except battery packs specified for the unit. Doing so may result in leaks, overheating, explosion, electric shock, burns, or injuries.
- When you use a completely new battery pack or a battery pack that has not been used for a long time, the charging lamp (CHARGE) may flash quickly when the battery is charged. In this case, remove and reinsert the battery pack and USB cable, and then try charging again.
- We recommend charging the battery pack in an ambient temperature of 10 °C to 30 °C (50 °F to 86 °F). The battery pack may not be correctly charged at temperatures outside this range.
- Operation is not be guaranteed with all external power supplies.
- When charging is finished, if charging using the charger, disconnect the USB AC adaptor from the power outlet. If charging with the battery inserted in the unit, disconnect the USB cable. Not doing so may result in a shorter battery life.
- Do not continuously or repeatedly charge the battery pack without using it if it is already fully charged or close to fully charged. Doing so may cause a deterioration in battery performance.
- If the charging lamp of the unit flashes while charging, remove the battery pack and then insert the same battery pack firmly back into the unit. If the charging lamp flashes again, this may indicate a faulty battery or that a battery pack other than the specified type has been inserted. Check that the battery pack is the specified type.
  If the battery pack is the specified type, remove the battery pack, replace it with a new or different one, and check that the newly inserted battery is charging correctly. If the newly inserted battery is charging correctly, the previously inserted battery may be faulty.
- If the charging lamp flashes while charging the battery pack inside the camera, this indicates that charging has stopped temporarily due to temperature outside the operating temperature range, and is on standby. When the temperature returns to the appropriate range, charging resumes and the charging lamp lights up again.
- If the charging lamp is not lit, remove and re-insert the USB cable and/or battery.

Remaining battery capacity indicator

- The remaining battery indicator is displayed by an icon on the monitor. It takes about one minute to display the correct remaining battery capacity.
- The correct remaining battery indication may not be displayed under some operating or environmental conditions.

Effective use of the battery pack

- Battery performance decreases in low temperature environments. So in cold places, the operational time of the battery pack is shorter. To ensure longer battery pack use, we recommend putting the battery pack in your pocket close to your body to warm it up, and insert it in the unit immediately before you start shooting. If there are any metal objects, such as keys in your pocket, be careful of causing a short-circuit.
- The battery pack will run down quickly with continuous shooting, turning the power on/off frequently, or setting the monitor brightness high.
- We recommend preparing spare battery packs and taking trial shots before shooting.
- If the battery terminals are dirty, you may not be able to turn on the unit or the battery pack may not become properly charged. In that case, clean the battery terminals by lightly wiping off any dust using a soft cloth or a cotton swab.

Storing the battery pack

- To extend the life of the battery pack, charge the battery pack and then fully discharge it in the unit at least once a year. Store the battery pack in a cool, dry place after removing it from the unit.
- To ensure long-term, safe battery use, the battery may automatically discharge gradually during storage. If you have not used a battery for a while, we recommend charging it before use.

Battery information

You can check the information, such as the model number and degradation status, of the battery inserted in the unit on the [Battery] page of the [Info] category in the menu.

- The battery will gradually deteriorate with repeated use over time. The battery status is displayed as one of three levels on the [Battery] page: [Good] / [Slightly deter.] / [Deter.(replace)]. If [Deter.(replace)] is displayed, we recommend that you purchase a new battery.
- To ensure long-term, safe battery use, the battery may automatically discharge gradually during storage. If you have not used a battery for a while, we recommend charging it before use.

About battery life

- The battery life is limited. If you use the same battery repeatedly or use the same battery for a long period, the battery capacity decreases gradually. If the available time of the battery is shortened significantly, it is probably time to replace the battery pack with a new one.
- The battery life varies according to how the battery pack is stored and the operating conditions and environment in which each battery pack is used.

About the built-in rechargeable battery

The unit has a built-in rechargeable battery for storing the date, time, and other settings even when the unit is turned off. The built-in rechargeable battery will become charged after 24 hours have elapsed if the unit is connected to a power outlet using the AC adaptor or if a fully charged battery pack is attached, regardless of whether the unit is turned on/off. The rechargeable battery will be fully discharged in about 2 months if the AC adaptor is not connected or the unit is used without the battery pack attached. Use your unit after charging the battery.

TP1002274768

5-076-802-11(2) Copyright 2026 Sony Corporation

Notes on Memory Cards

- If [Media Temperature High] is displayed on the monitor, do not remove the memory card from the camera right away. Instead, wait for a while after turning off the unit, and then remove the memory card. If you touch the memory card while it is hot, you may drop it and the memory card may become damaged. Be careful when removing the memory card.
- If you repeatedly shoot and delete images over an extended period, fragmentation of files in the memory card may occur, and video recording may be interrupted in the middle of shooting. If this happens, save your images to a computer or other storage location, then execute [TC/Media] – [Format Media] – [Full Format] or [Quick Format] in the menu on the unit.
- Do not remove the memory card, disconnect the USB cable, remove the battery pack, or turn the unit off while the access lamp is lit. This may cause the data on the memory card to become damaged.
- Be sure to back up the data for protection.
- Not all memory cards are guaranteed to operate correctly.
- Images recorded on an SDXC memory card or CFexpress Type A memory card cannot be imported to or played on computers or AV devices not compatible with exFAT when connected using a USB cable. Make sure that the device is compatible with exFAT before connecting it to the unit.
  If you connect the unit to an incompatible device, you may be prompted to format the card. Never format the card in response to this prompt, as doing so will erase all data on the card.
  (exFAT is the file system used on SDXC memory cards and CFexpress Type A memory cards.)
- Do not expose the memory card to water.
- Do not strike, bend or drop the memory card.
- Do not use or store the memory card under the following conditions:
  - High temperature locations, such as in a car parked under the sun
  - Locations exposed to direct sunlight
  - Humid locations or locations with corrosive substances present
- If the memory card is used near areas with strong magnetization, or used in locations subject to static electricity or electrical noise, the data on the memory card may become damaged.
- Do not touch the electrical contacts of the memory card with your hand or a metal object.
- Do not leave the memory card within the reach of small children. They might accidentally swallow it.
- Do not disassemble or modify the memory card.
- The memory card may be hot just after it has been used for an extended period. Be careful when you handle it.
- A memory card formatted with a computer is not guaranteed to operate with the unit. Be sure to format the memory card using the unit.
- Data read/write speeds will vary depending on the combination of the memory card and the device used.
- Do not press down hard when writing in the memo space on the memory card.
- Do not attach a label on the memory card itself nor on a memory card adaptor. You may not be able to remove the memory card.
- If the write-protection switch of an SD card is set to the LOCK position, you cannot record or delete images. In this case, set the switch to the record position.

TP1002274769

5-076-802-11(2) Copyright 2026 Sony Corporation

Interchangeable Lens Digital Camera
ILME-FX5/ILME-FX5B

Cleaning the Image Sensor ([Sensor Cleaning])

If dust or debris gets inside the unit and adheres to the surface of the image sensor (the part that converts light to an electrical signal), the dust or debris may appear in the image, depending on the shooting environment. If this happens, clean the image sensor immediately using the following procedure.

1. **Check that the battery is sufficiently charged.**

2. **Select [Technical] – [Sensor Cleaning] – [Sensor Cleaning] – [Execute] in the full menu.**

   The image sensor vibrates for a short interval to shake off the dust.

3. **Turn the unit off.**

4. **Remove the lens.**

5. **Use a commercially available blower to blow dust from the surface of the image sensor and the surrounding area.**

   - Hold the camera slightly face downward so that the dust falls out.

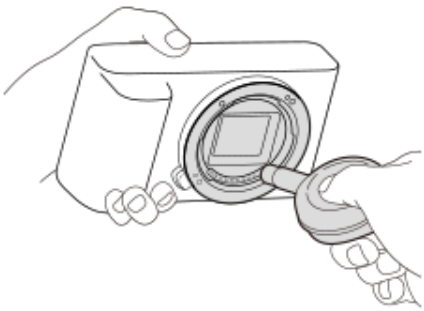

6. **Attach the lens.**

Hint

- For details about how to check and clean the image sensor, visit the following URL.
  https://support.d-imaging.sony.co.jp/www/support/ilc/sensor/index.php

Note

- When executing the cleaning mode, remove the lens with the camera turned on.
- Sensor cleaning cannot be executed if the remaining battery capacity is too low.
- Do not use a spray type blower as it may scatter water droplets inside the camera body.
- Do not put the tip of a blower into the cavity beyond the lens mount area, so that the tip of the blower does not touch the image sensor.
- When cleaning, do not blow too strongly. If the airflow is too strong, the inside of the unit may become damaged.
- If the dust or debris is not removed after cleaning using the procedure, contact your service representative.
- During cleaning, the image sensor emits a vibration noise. This is not a malfunction.

- Cleaning may be performed automatically when the unit is turned off.

Related Topic

- Attaching/Removing a Lens

TP1002274770

5-076-802-11(2) Copyright 2026 Sony Corporation

Cleaning

Cleaning the lens

- Do not use a cleaning solution containing organic solvents, such as thinner or benzine.
- When cleaning the lens surface, remove dust with a commercially available blower. In case of dust that sticks to the surface, wipe it off with a soft cloth or lens tissue paper slightly moistened with lens cleaning solution. Wipe in a spiral pattern from the center to the outside. Do not spray lens cleaning solution directly onto the lens surface.

Cleaning inside the camera body

Do not touch the parts of the unit inside the lens mount, such as the lens signal contacts. To clean inside the lens mount, use a commercially available blower* to blow any dust off.

* Do not use a spray-type blower as doing so may cause a malfunction.

Cleaning the surface of the unit

Clean with a soft cloth slightly moistened with water or warm water, then wipe with a dry cloth. Do not do any of the following, as this may cause the surface of the unit to deteriorate or the exterior coating to peel off.

- Do not expose the unit to chemical products, such as thinner, benzine, alcohol, chemically-treated cloths, insect repellent, sunscreen, or insecticide.
- Do not touch the unit with any of the above on your hands.
- Do not leave the unit in contact with rubber or vinyl for extended intervals.

Cleaning the monitor

- If you wipe the monitor firmly using tissue paper or other material, the monitor may become scratched.
- If the monitor becomes dirty with fingerprints or dust, gently remove the dust from the surface, and then clean the monitor using a soft cloth or similar.

TP1002274771

5-076-802-11(2) Copyright 2026 Sony Corporation

Interchangeable Lens Digital Camera
ILME-FX5/ILME-FX5B

System Configuration

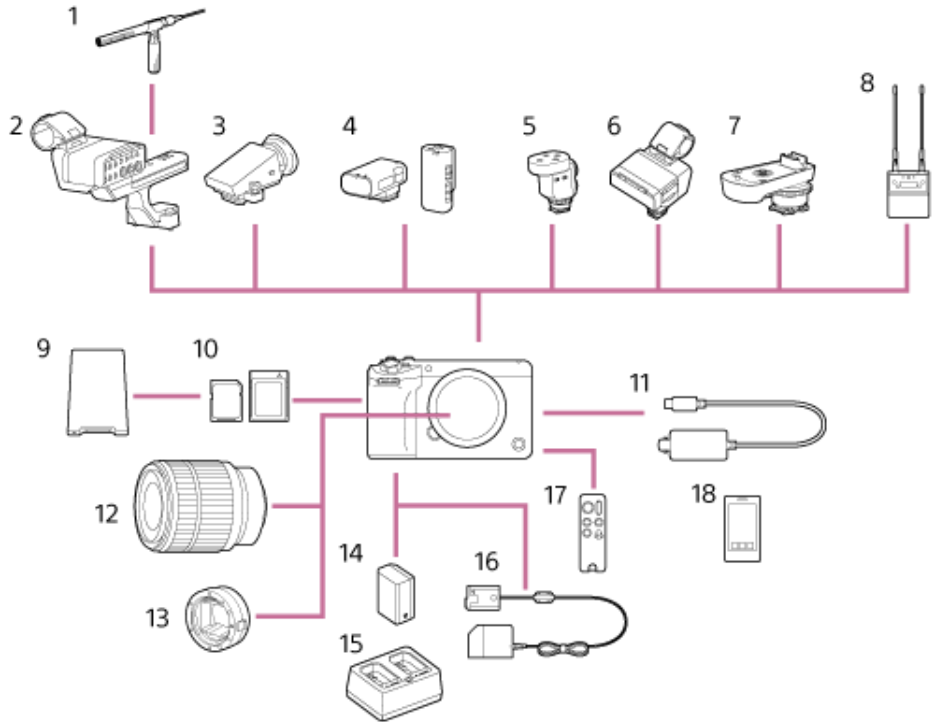

1. **ECM-778 Shotgun Microphone**
2. **XLR-H2 XLR Handle Unit (supplied with ILME-FX5 only)**
3. **DVF-EL1 OLED Viewfinder**
4. **ECM-W3/ECM-W3S Wireless Microphone**
5. **ECM-M1 Shotgun Microphone**
6. **XLR-A4 XLR Adaptor**
7. **SMAD-P5 Multi Interface Shoe Adaptor**
8. **URX-P41D Wireless Audio Receiver**
9. **CFexpress Type A card reader/SDXC card reader**
10. **CFexpress Type A memory cards/SDXC memory cards**
11. **VMC-BNCU1 Timecode Adaptor Cable**
12. **E-mount lens**
13. **LA-EA5 Mount Adaptor**
14. **NP-SA100 Rechargeable Battery Pack (supplied)**
15. **BC-SAD1 Battery Charger (supplied)**
16. **DC-C2 DC Coupler**
17. **RMT-VP2 Remote Commander**
18. **Smartphone**

TP1002215241

5-076-802-11(2) Copyright 2026 Sony Corporation

Interchangeable Lens Digital Camera
ILME-FX5/ILME-FX5B

Left Side / Front Side

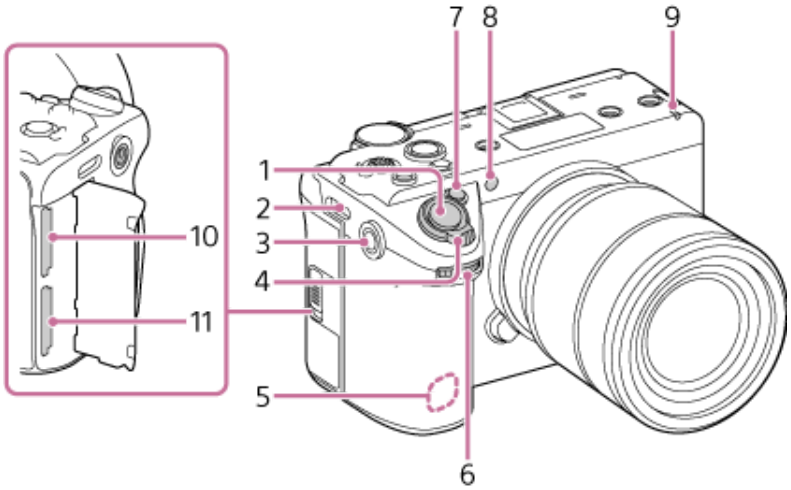

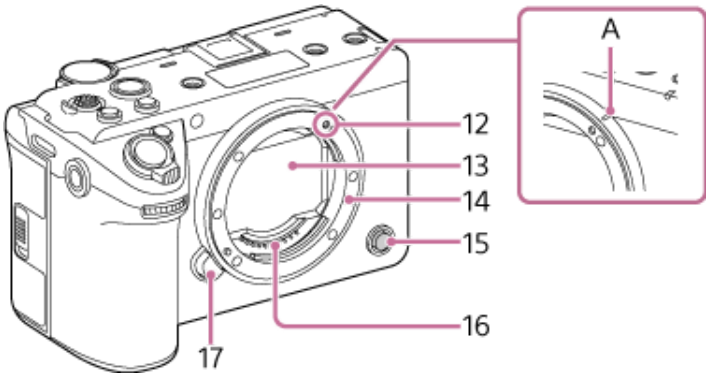

1. **Grab button**
   You can assign specific functions to it.

2. **Shoulder strap (sold separately) attachment**
3. **Accessory screw hole**
   Compatible with 1/4-20 UNC screws
   When attaching an accessory, use a screw of length 5.5 mm or shorter. If you use a screw that is longer than 5.5 mm, you will not be able to firmly secure the accessory to the unit, and the unit may be damaged.

4. **Zoom lever**
5. **Wireless LAN antenna (built-in)**
   Covering this area with your hand or other objects may interrupt the Wi-Fi communication.

6. **Assignable Dial**
   Adjusts the iris, gain value, and other settings.

7. **Assignable button 1**
8. **Visible light + IR sensor**

Note

- Do not obscure with your hands while shooting.

9. **Recording/tally lamp (front)**
   Lights up when recording starts. Flashes when the remaining capacity on the memory card is low.

10. **CFexpress Type A/SD card slot (SLOT A)**
11. **CFexpress Type A/SD card slot (SLOT B)**
12. **Mounting index**
    The lens mount has a bar-shaped protrusion (A) on its side. Use this as a guide when attaching a lens.
    You can attach an A-mount lens (sold separately) using an LA-EA3/LA-EA4/LA-EA5 mount adaptor (sold separately).

Note

- Manual focus only is supported.
- In-body image stabilization is available.

13. **Image sensor**

Note

- Do not touch directly with your hands.

14. **Mount**
15. **Assignable button 6**
16. **Lens signal contacts**

Note

- Do not touch directly with your hands.

17. **Lens release button**

Related Topic

- Adjusting the Angle of the Viewfinder (sold separately)
- Synchronizing Timecode with an External Device
- Using a Mobile Device
- Setting the Audio to Record using the XLR Handle Unit (ILME-FX5 only)
- Basic Shooting Procedure

TP1002215242

5-076-802-11(2) Copyright 2026 Sony Corporation

Right Side

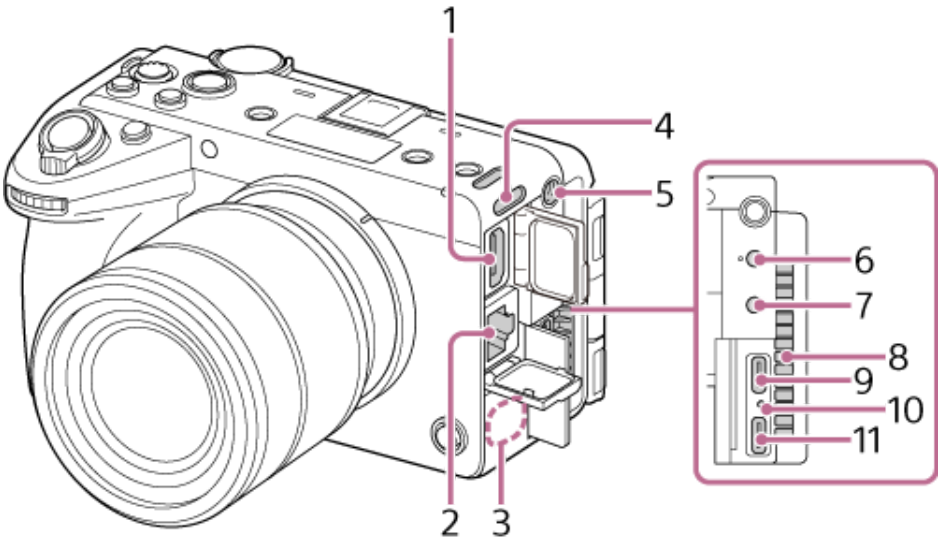

1. **HDMI connector**
   Outputs an HDMI signal.

2. **LAN connector**
   Wired LAN connector.

3. **Wireless LAN antenna (built-in)**
   Covering this area with your hand or other objects may interrupt the Wi-Fi communication.

4. **Shoulder strap (sold separately) attachment**

5. **Accessory screw hole**
   Compatible with 1/4-20 UNC screws
   When attaching an accessory, use a screw of length 5.5 mm or shorter. If you use a screw that is longer than 5.5 mm, you will not be able to firmly secure the accessory to the unit, and the unit may be damaged.

6. **Microphone connector**
   Connect to a Ø3.5 mm stereo mini jack (3-pole) microphone.
   There is a small protrusion next to the microphone connector. Use the protrusion to distinguish the connector from the headphone connector.

7. **Headphone connector**
8. **Air outlet**

Note

- Do not cover the air outlet.
- Exercise caution as the area near the air outlet will be hot.

9. **USB Type-C® connector (USB PORT 1)**
   Use for mass storage, USB tethering, remote control operation.

10. **Charging lamp**
11. **USB Type-C connector (USB PORT 2)**
    Use to connect the timecode adaptor cable or for remote control operation.

About the USB connectors

- Only the USB Type-C connector of USB PORT 1 supports SuperSpeed USB 10 Gbps (USB 3.2). We recommend using USB PORT 1 when connecting the camera to a computer or other device.
- The USB PORT 2 connector can also be used to connect the camera to a computer or other device, but the USB communication will be limited to Hi-Speed USB 480 Mbps (USB 2.0).
- You can supply power and charge the battery using the USB Type-C connector of either USB PORT 1 or USB PORT 2. The charging time is the same regardless of which connector you use.
- You can supply power and support USB communication by using two USB Type-C connectors. In that case, use USB PORT 1 for USB communication and USB PORT 2 to supply power.
- The VMC-BNCU1 timecode adaptor cable (sold separately) is supported on USB PORT 2 only. When using the timecode adaptor cable, use USB PORT 1 for USB communication or power supply, and connect the timecode adaptor cable to USB PORT 2.

Related Topic

- Assignable Buttons
- Using Auto Focus Temporarily
- Adjusting the Focus Manually
- Adjusting the Focus Automatically
- Basic Shooting Procedure
- Switching Between the LCD Monitor/Viewfinder Display
- Adjusting the Iris
- Adjusting the Gain
- Adjusting the White Balance Manually
- Adjusting the Shutter
- Inserting a Memory Card
- Selecting Fixed/Variable Frame Rate (Slow & Quick Motion)
- Network Functions
- Connecting to the Internet via Wireless LAN
- Connecting to the Internet via Wired LAN
- Setting the Audio to Record using the XLR Handle Unit (ILME-FX5 only)
- Shooting Screen / Playback Screen
- Searching for Functions from the Full Menu List
- Direct Menu
- Switching the Power On/Off

TP1002215243

5-076-802-11(2) Copyright 2026 Sony Corporation

Interchangeable Lens Digital Camera
ILME-FX5/ILME-FX5B

Rear Side

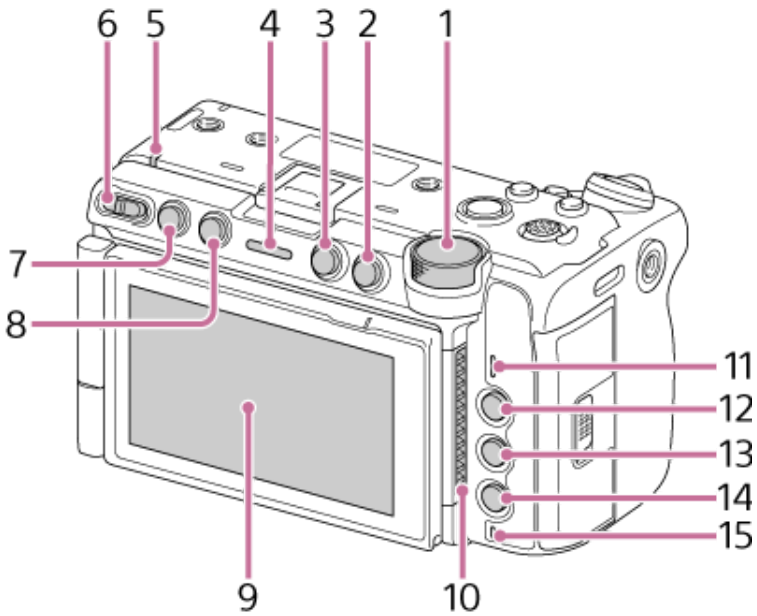

1. **Multi-function dial**
   Press when viewing the image on the LCD monitor to display the direct menu.
   Turn the dial when a menu is displayed on the LCD monitor to move the cursor up/down to select menu items or settings.
   Press to apply the selected item.
   When the menu is not being displayed, the dial functions as an assignable dial.

2. **BACK button**
   Press to return to the previous menu. Any unconfirmed changes are canceled.

3. **MENU button**
   Press and release to display the menu screen. Press and hold to display the full menu screen.

4. **Recording/tally lamp (rear)**
   Lights up when recording starts.

5. **Power lamp**
6. **Power switch**
7. **CLIPS button**
   Press to display the clip list screen showing the clips on the active playback media and enable playback operations. Press this button while the clip list screen is displayed to return to the shooting screen.

8. **Assignable button 4**
9. **LCD monitor/Touch panel**
10. **Air inlet**

Note

- Do not cover the air inlet.

11. **Speaker**
12. **Assignable button 5**
13. **HOME button**
    Press to display the Home screen on the LCD monitor. It is not displayed in the HDMI output video.

14. **USER button**
Press to show/hide the user functions screen.

15. **Access lamp**

Related Topic

- Switching the Power On/Off
- Adjusting the Angle of the LCD Monitor
- Using the Touch Panel
- Adjusting the Angle of the Viewfinder (sold separately)
- Adjusting the Brightness of the Viewfinder (sold separately)
- Switching Between the LCD Monitor/Viewfinder Display
- Shooting Screen / Playback Screen
- Direct Menu
- Transferring Files to “C3 Portal”
- Managing/Editing Clips using a Computer
- Connecting an External Device to the HDMI Output
- HDMI Output Connector Output Formats
- Synchronizing Timecode with an External Device
- Connecting to the Internet via Wired LAN
- Basic Shooting Procedure
- Recording to Both Memory Cards A and B
- Inserting a Memory Card

TP1002215244

5-076-802-11(2) Copyright 2026 Sony Corporation

Top Side

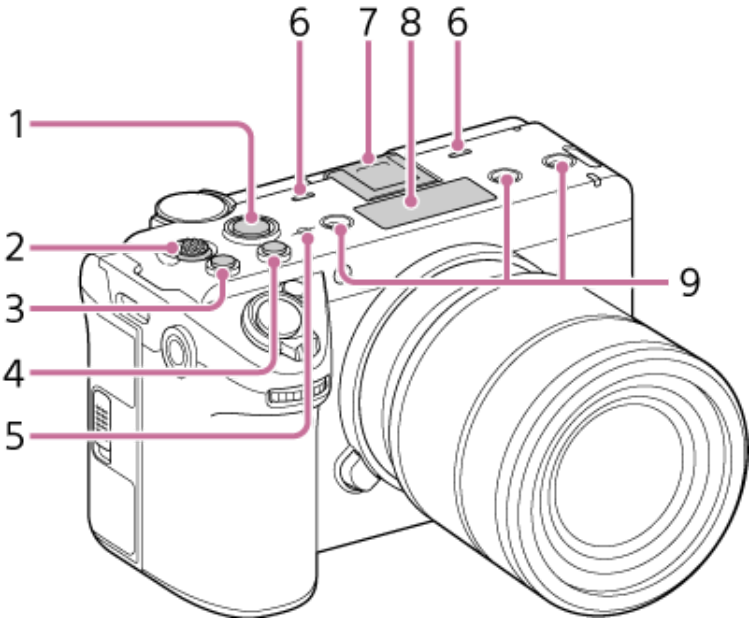

1. **Record START/STOP button**
   Press the record START/STOP button, turning the light on, to start recording. Press again, turning the light off, to stop recording.

2. **Multi selector**
   Used for auto focus operation and menu operation. Moves the cursor in 8 directions and selects/applies values when pressed.

3. **Assignable button 3**
4. **Assignable button 2**
5. **Image sensor position indicator**
   The image sensor converts light into electrical signals. The position of the sensor surface is indicated by (image sensor position indicator). To accurately measure the distance to a subject, measure the distance relative to this line.

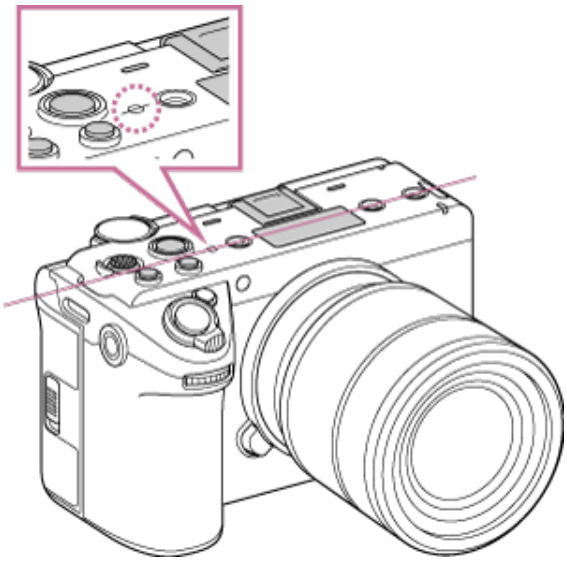

6. **Internal microphone**
   Microphone for recording ambient sound.

7. **Multi Interface Shoe**

Use to attach the XLR handle unit and other accessories (sold separately).

Multi Interface Shoe

For details about accessories supported by the Multi Interface Shoe, contact your sales representative.

8. **VF connector**
   Connect to DVF-EL1 viewfinder (sold separately).

9. **Accessory screw hole**
   Compatible with 1/4-20 UNC screws
   When attaching an accessory, use a screw of length 5.5 mm or shorter. If you use a screw that is longer than 5.5 mm, you will not be able to firmly secure the accessory to the unit, and the unit may be damaged.

Related Topic

- Setting the Audio to Record using the XLR Handle Unit (ILME-FX5 only)
- Selecting Audio Input Devices on the XLR Handle Unit (ILME-FX5 only)
- Basic Shooting Procedure
- Left Side / Front Side
- Zooming using the Zoom Lever
- Assignable Buttons
- Rear Side
- Focusing using Magnified View
- Playing a Clip

TP1002215245

5-076-802-11(2) Copyright 2026 Sony Corporation

Bottom Side

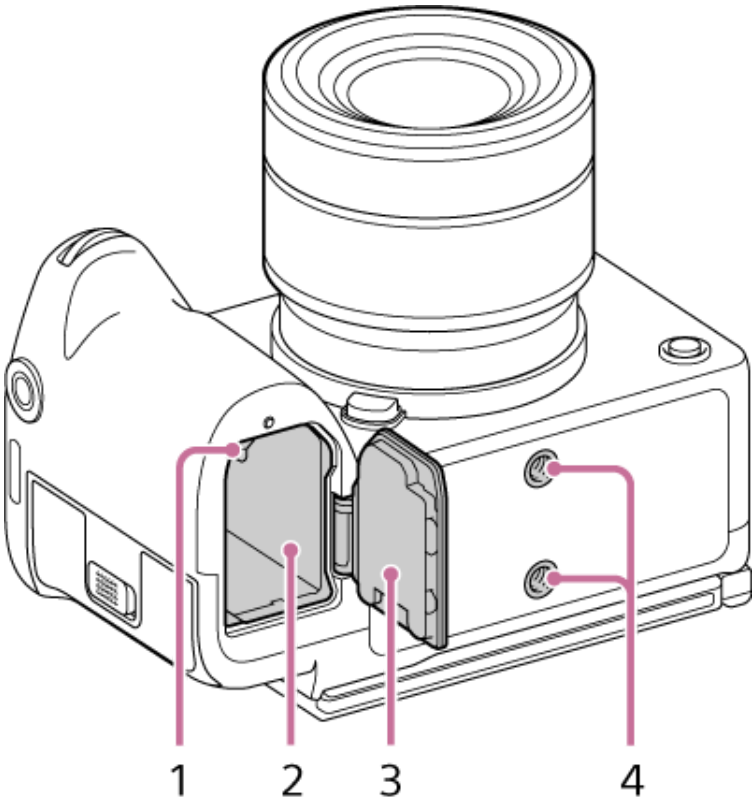

1. **Lock lever**
2. **Battery compartment**
3. **Battery cover**
4. **Tripod screw holes**
   Compatible with 1/4-20 UNC screws
   When attaching to a tripod, use a tripod with a screw of length 5.5 mm or shorter. If you use a screw that is longer than 5.5 mm, you will not be able to firmly secure the unit to the tripod, and the unit may be damaged.

Hint

- **Battery cover option component**
  There is a battery cover, available from your Sony support representative, that allows you to use a DC coupler (sold separately) with the battery cover closed.

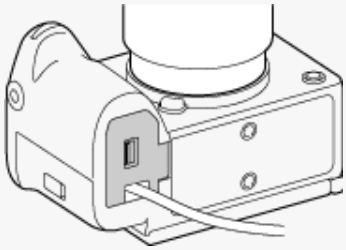

For inquiries about availability or purchases, contact your Sony support representative. When purchasing, provide the product name and number.
Availability may vary depending on the country or region.
Sony support
https://www.sony.net/support-contact

Product name: BT cover for DC coupler (sold separately)
Number: X-5005-359-1

Using this battery cover outdoors in rainy weather may allow water droplets or moisture to enter the camera body.

Removal

Move the battery cover removal lever (A) in the direction of the arrow and remove the battery cover.

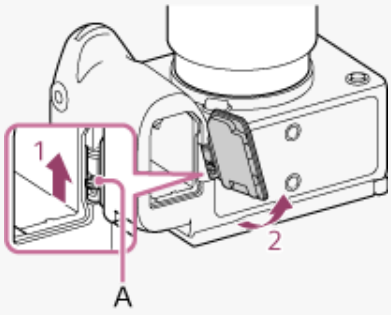

Attachment

Insert one pin of the battery cover into the hole in the mounting bracket, then push the battery cover into place to attach the other pin.

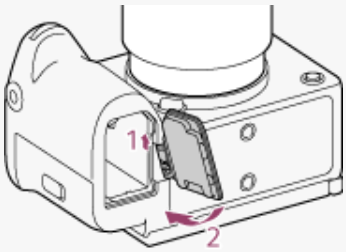

TP1002215246

5-076-802-11(2) Copyright 2026 Sony Corporation

XLR handle unit (ILME-FX5 only)

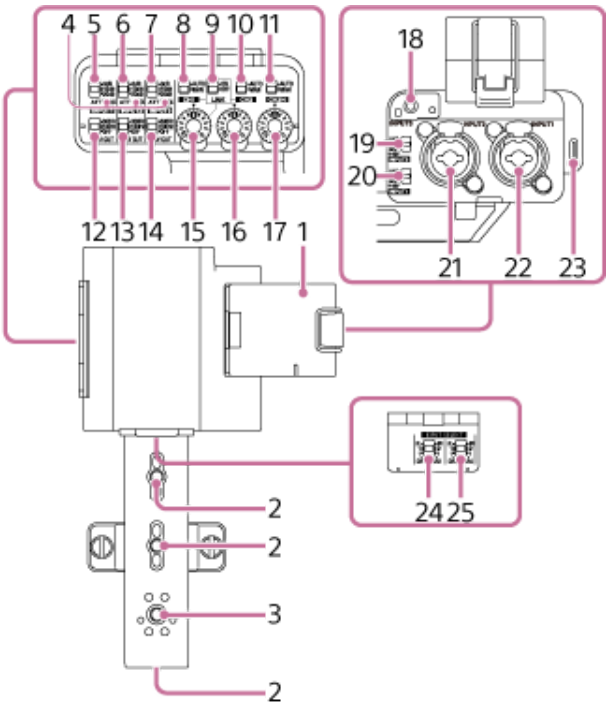

1. **Microphone holder**

2. **Accessory attachment screw holes**
   Compatible with 1/4-20 UNC screws (length of 8.0 mm or shorter).

3. **Accessory shoe mount/Accessory attachment screw hole**
   Compatible with 1/4-20 UNC screws (length of 7.5 mm or shorter).

4. **OL (overload) lamp**
   Lights up when there is loud input audio that would cause analog clipping. Adjust the input level using the ATT switch on the connected device or the handle unit, so that the audio level is within the range where the lamp does not turn on.

5. **ATT (INPUT1) switch**
   Sets the reference input level for the INPUT1 connector. Enabled when the INPUT1 (LINE/MIC/MIC+48V) switch is set to the “MIC” position or “MIC+48V” position.

6. **ATT (INPUT2) switch**
   Sets the reference input level for the INPUT2 connector. Enabled when the INPUT2 (LINE/MIC/MIC+48V) switch is set to the “MIC” position or “MIC+48V” position.

7. **ATT (INPUT3) switch**
   Sets the reference input level for the INPUT3 connector.

8. **AUTO/MAN (CH1) switch**
   Selects the adjustment method (auto/manual) for the audio level output to CH1.

9. **LINK switch**
   When both the LINK switch is set to the “ON” position and the AUTO/MAN (CH1) switch is set to the “MAN” position, you can adjust the audio recording level for both CH1 and CH2 using the AUDIO LEVEL (CH1) dial.
   When the AUTO/MAN (CH1) switch is set to the “AUTO” position, CH2 is also set to “AUTO,” but this operation alone does not link the audio recording level for both CH1 and CH2. To link the channels, set [Audio] – [Audio Input] – [CH1&2 AGC Mode] or [CH3&4 AGC Mode] to [Stereo] in the full menu.

10. **AUTO/MAN (CH2) switch**
Selects the adjustment method (auto/manual) for the audio level output to CH2.

11. **AUTO/MAN (CH3/4) switch**
Selects the adjustment method (auto/manual) for the audio level output to CH3 and CH4.

12. **LOW CUT (INPUT1) switch**
Attenuates the low-frequency components of the audio input from the INPUT1 connector, reducing unnecessary noise.
Enabled when the INPUT1 (LINE/MIC/MIC+48V) switch is set to the “MIC” position or “MIC+48V” position.

13. **LOW CUT (INPUT2) switch**
Attenuates the low-frequency components of the audio input from the INPUT2 connector, reducing unnecessary noise.
Enabled when the INPUT2 (LINE/MIC/MIC+48V) switch is set to the “MIC” position or “MIC+48V” position.

14. **LOW CUT (INPUT3) switch**
Attenuates the low-frequency components of the audio input from the INPUT3 connector, reducing unnecessary noise.

15. **AUDIO LEVEL (CH1) dial**
Adjusts the audio recording level output to CH1.

16. **AUDIO LEVEL (CH2) dial**
Adjusts the audio recording level output to CH2.

17. **AUDIO LEVEL (CH3/4) dial**
Adjusts the audio recording level output to CH3 and CH4.

18. **INPUT3 connector (Ø3.5 mm stereo mini jack, plug-in power compatible)**

19. **INPUT2 (LINE/MIC/MIC+48V) switch**
Switches the type of device connected to the INPUT2 connector.

20. **INPUT1 (LINE/MIC/MIC+48V) switch**
Switches the type of device connected to the INPUT1 connector.

21. **INPUT2 connector (XLR/TRS* type, 3-pin, female, +48 V phantom power supply compatible)**
    * 3-pole jack (Tip: Hot, Ring: Cold, Sleeve: GND)

22. **INPUT1 connector (XLR/TRS* type, 3-pin, female, +48 V phantom power supply compatible)**
    * 3-pole jack (Tip: Hot, Ring: Cold, Sleeve: GND)

23. **USB Type-C connectors**
Connector used for updating the firmware of the XLR handle unit.

Note

- USB audio output is not supported. USB power supply (including USB PD) is not supported.

24. **INPUT SELECT (CH1/CH2) switch**
Sets the input channels (CH1/CH2) to the MI shoe.

25. **INPUT SELECT (CH3/CH4) switch**
Sets the input channels (CH3/CH4) to the MI shoe.

TP1002274772

5-076-802-11(2) Copyright 2026 Sony Corporation

Interchangeable Lens Digital Camera
ILME-FX5/ILME-FX5B

Using the Touch Panel

Touch panel usage precautions

The LCD monitor of the unit is a touch panel, which you operate directly by touch using your finger.
The touch panel is designed to be touched lightly with your finger. Do not press the panel with force or touch it using sharp-edged or pointed objects (nail, ballpoint pen, pin, etc.).
The touch panel may not respond when touched in the following circumstances. Also note that these may cause a malfunction.

- Operation using the tips of finger nails
- Operation while other objects are touching the screen surface
- Operation with a protective sheet or sticker attached
- Operation with water droplets or condensation on the display
- Operation using wet or sweaty fingers

Touch panel gestures

Tap
Lightly touch an item, such as an icon or menu item, using your finger and then immediately remove your finger.
Drag
Touch the screen and slide your finger to the desired position of the screen, and then remove your finger.

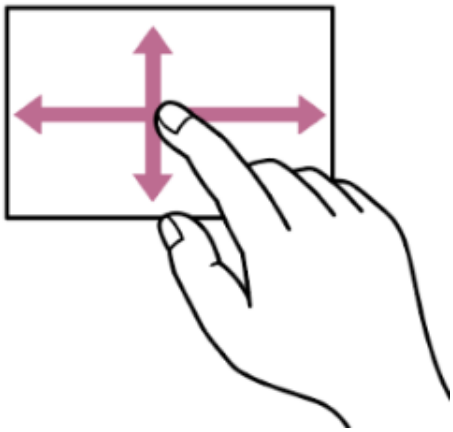

Flick/swipe
Touch the screen and quickly flick/swipe your finger up, down, left, or right.

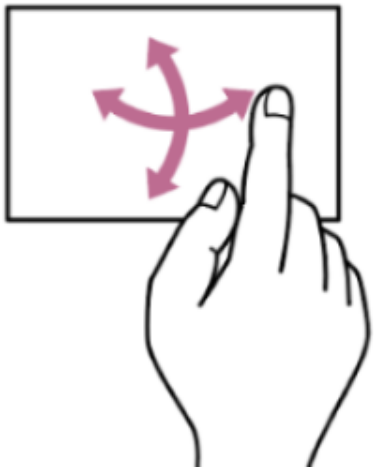

Hint

- If the display content continues beyond the edges of the screen, you can drag or flick the display content to scroll.

Configuring the touch panel

Touch panel operation can be enabled/disabled using [Technical] – [Touch Operation] in the full menu.

Using touch-enabled settings screens

This section describes operation of the menu as an example using touch operation.

Screen layout

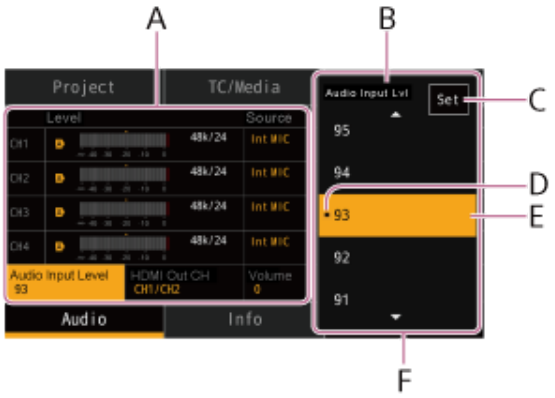

A: Setup item
B: Setup item name
C: [Set] (apply) button
D: Mark indicating the previous value
E: Value selection cursor (orange frame)
F: Value selection options

Operation

1. **Tap a setup item (A).**

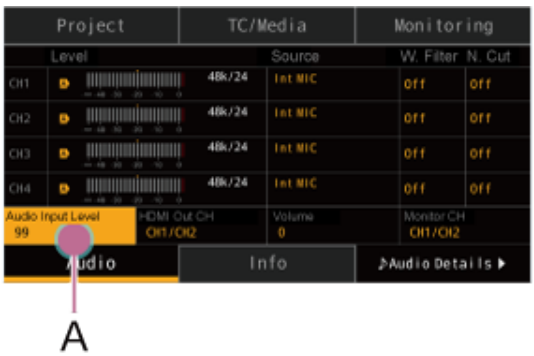

The selection options for the value appear.

2. **Drag or flick a setting to select a value (B).**

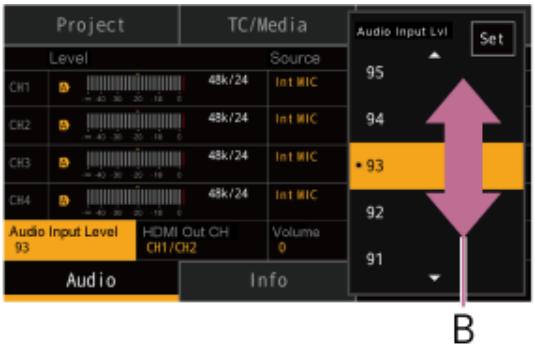

3. **Tap [Set] or the value selection cursor.**
   The value is applied and the display returns to the previous screen.

Hint

- Press the BACK button to return to the previous value.
- You can also use the multi-function dial or multi selector.
- Touch operation can also be disabled.

TP1002215249

5-076-802-11(2) Copyright 2026 Sony Corporation

Switching Screens

The LCD monitor operates in two modes centered around the shooting screen: video monitoring mode where you can check settings while monitoring the video, and information display mode dedicated for checking and changing information and settings. You can switch between modes using the HOME button. The user functions screen, menu screen, full menu screen, playback screen, and clip list screen can be displayed in each mode.
You can switch between the screens to display on the LCD monitor as shown in the following diagram using the HOME button, MENU button, CLIPS button, and USER button.

Video monitoring mode

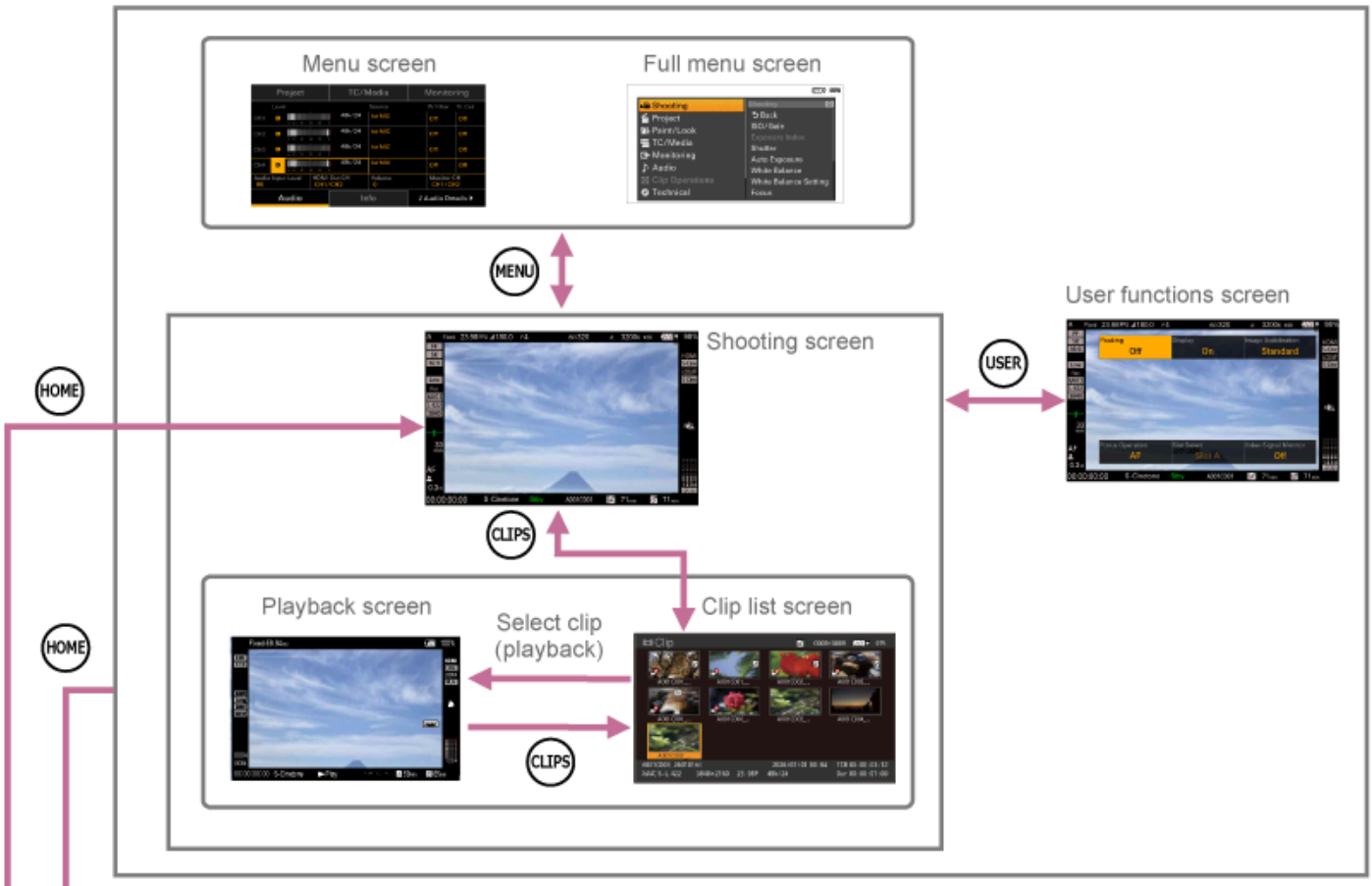

Information display mode

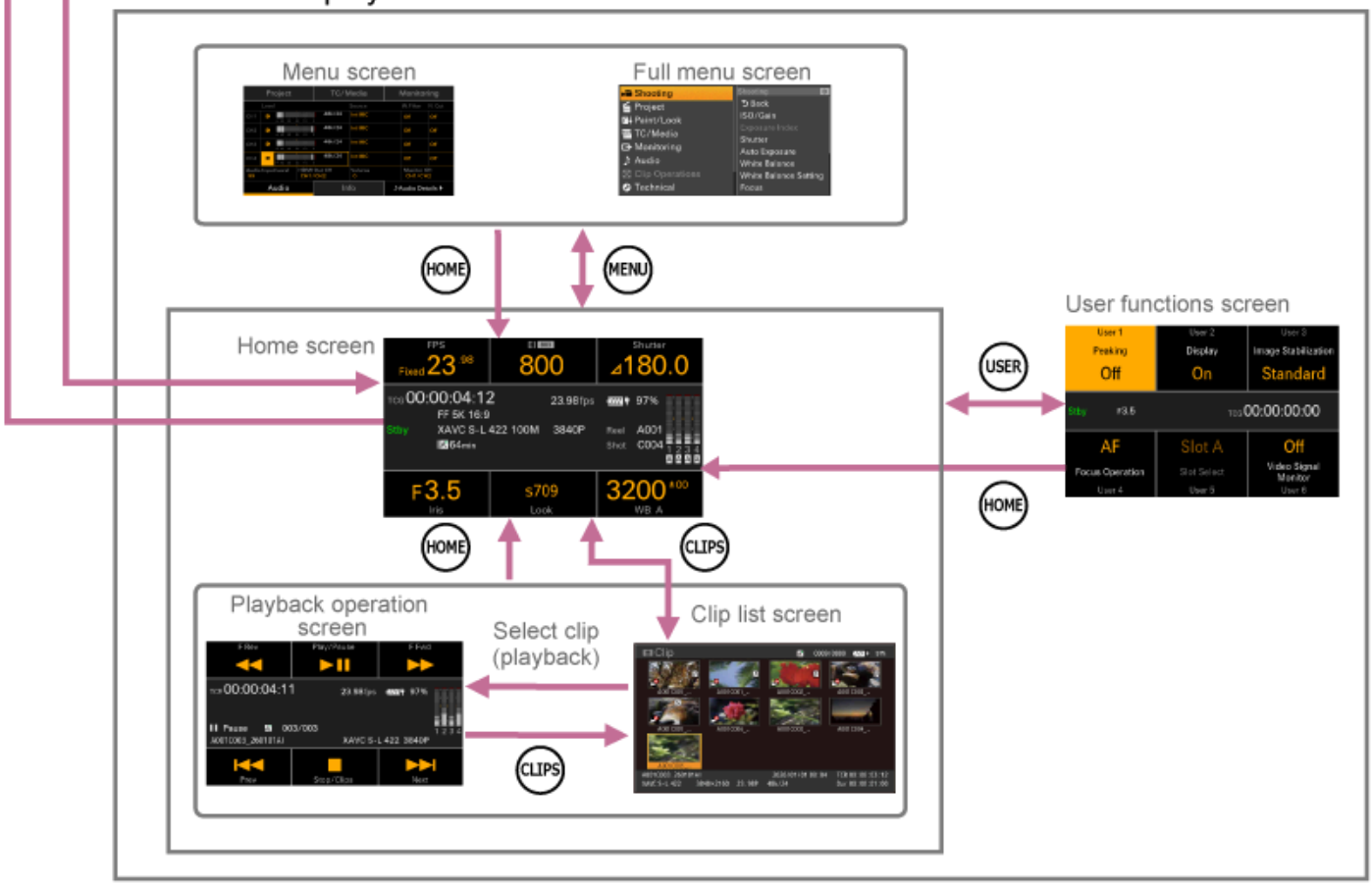

Hint

- In video monitoring mode, you can output the same display screen as the LCD monitor to an external monitor.

- Information display mode is designed for LCD monitor use in combination with a connected external monitor for HDMI output. Place the external monitor on the top side, for example, of the unit for monitoring the video, and use the LCD monitor for configuring settings according to your shooting style.
  - The functions displayed on the LCD monitor are operated using touch operation, but the orange cursor can also be operated using the multi-function dial or multi selector. To use direct menu operation on the shooting screen in the same way as in video monitoring mode, set [Technical] – [Menu Settings] – [Info. Disp. Mode Operation] to [Direct Menu Priority] in the full menu.
  - The Home screen, user functions screen, menu screen, full menu screen, and playback operation screen are not displayed on an external monitor. When the Home screen, user functions screen, menu screen, or full menu screen is displayed on the LCD monitor, the shooting screen will be displayed on the external monitor. When the playback operation screen is displayed on the LCD monitor, the playback screen will be displayed on the external monitor. However, when the user functions screen, menu screen, or full menu screen is displayed on the LCD monitor, some of the information that is displayed on the external monitor shooting screen is not displayed.

Related Topic

- Home Screen
- User Functions Screen
- Menu Screen
- Full Menu Operations
- Structure of the Clip List Screen
- Playback Operation Screen

TP1002295520

5-076-802-11(2) Copyright 2026 Sony Corporation

Interchangeable Lens Digital Camera
ILME-FX5/ILME-FX5B

Shooting Screen / Playback Screen

In video monitoring mode, during shooting (recording or recording standby) and during playback, the shooting screen and playback screen that show the status and settings of the unit are displayed around the image on the LCD monitor and external monitor.
In information display mode, various information and settings are displayed on the LCD monitor, while the shooting screen and playback screen are displayed on the external monitor. To display the settings on the shooting screen and playback screen, set [Monitoring] – [Info. Disp.] to [On] in the menu beforehand.

Note

- You can select to show/hide each item independently. To display the recording mode, slot A/B, operation status, and interval recording interval time at all times, set [Monitoring] – [Display On/Off] – [Rec/Play Status] to [Always On] or [On] in the full menu.
  Items marked with an asterisk* indicate items that cannot be displayed on the external monitor in information display mode.

Information displayed on the screen while shooting

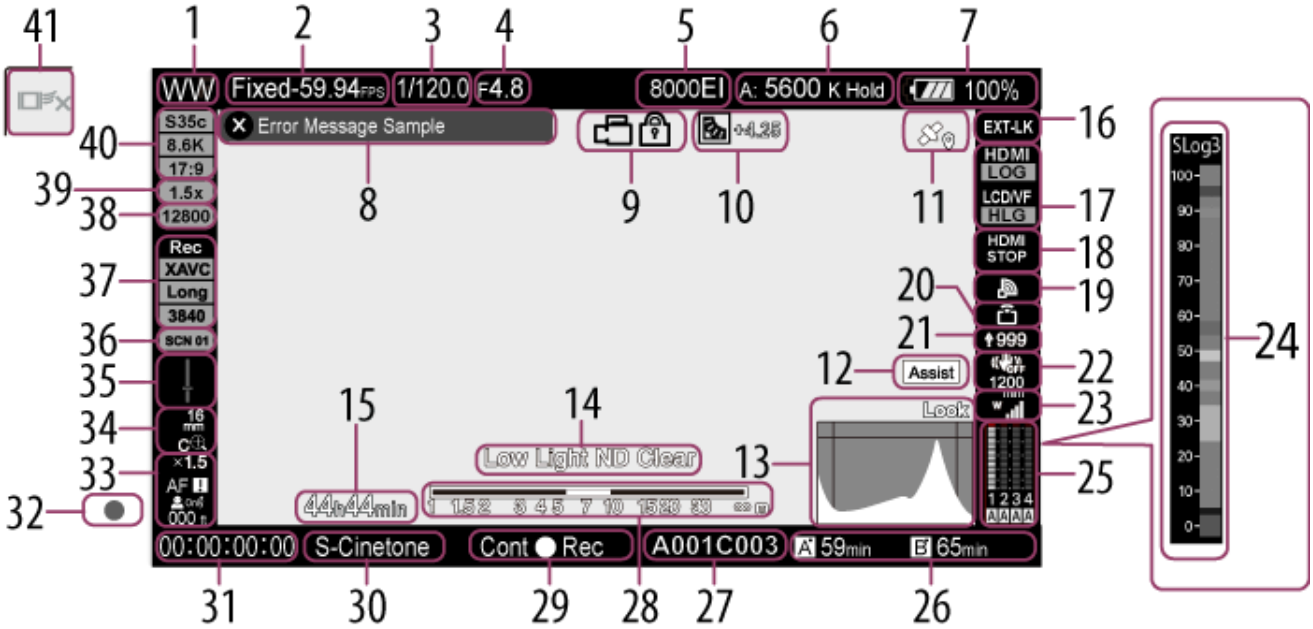

1. **Camera ID indicator**
2. **Recording format indicator (frame rate and project frame rate)**
   [Fixed] is displayed when [Shooting] – [FPS] – [Fixed/Variable Select] is set to [Fixed] in the full menu.

3. **Shutter indicator**
4. **Iris indicator**
   Displays the iris position (F-number).

5. **Gain indicator**
   In custom shooting mode, it displays the gain value or ISO value. In [Flexible ISO] shooting mode, it displays the ISO value. In [Cine EI] / [Cine EI Quick] shooting mode, it displays the EI value.

Display	Meaning
A	Auto mode
✿	Temporary adjustment mode

6. **White balance mode indicator**

Display	Meaning
A	Auto mode
ATW Hold	Auto mode paused
A:	Memory A mode
B:	Memory B mode
C:	Memory C mode
D:	Memory D mode
E:	Memory E mode
F:	Memory F mode
G:	Memory G mode
H:	Memory H mode

7. **Power status indicator**
Displays the remaining battery charge.
An icon ( ) indicating the USB power supply appears next to the battery indicator when using a USB power supply.

Display	Meaning
	81% to 100%
	51% to 80%
	21% to 50%
	1% to 20%
	0%

8. **Warning and error message display**
9. **Key lock status indicator**
10. **Auto exposure adjustment operating mode and level indicator**

Display	Meaning
	Backlight mode
AE	Standard mode
	Spotlight mode

11. **GPS status indicator**

Display	Meaning
	Location data is within the validity period.
	Location data is outside the validity period.
	Location data linking is not possible due to invalid settings.

12. **Gamma display assist indicator***
Displays the gamma display assist status. The gamma display assist function can be shown/hidden using an assignable button assigned with [Gamma Display Assist].

13. **Video signal monitor display**
Displays a waveform, vectorscope, and histogram.
The orange line indicates the set value of the zebra level.
In log shooting mode, the monitor target LUT application status is displayed above the display. When [LUT Off] is selected, the color gamut setting is displayed. When [LUT On] is selected, “Look” is displayed regardless of the applied LUT type.

14. **Video level warning indicator***
15. **Interval recording interval display**
16. **Timecode external lock indicator**
Displays “EXT-LK” when locked to the timecode of an external device.

17. **Output look indicator**
Displays the look destination and look name.

18. **HDMI remote recording mode indicator**
Displays the operating status in HDMI remote recording mode.

19. **Network status indicator**
Displays the network connection status as an icon.

20. **Upload indicator/remaining files indicator**

21. **Streaming status indicator**

Display	Meaning
	Streaming transmitting status
	Switching to streaming transmitting status
	Streaming not transmitting status due to an error

22. **Image stabilization mode indicator**
23. **UWP-D series status indicator**
Displays the RF level signal strength as an icon when a UWP-D series device is connected to the MI shoe configured for digital audio transfer.

24. **Exposure assist color scale indicator**
Displays the exposure assist display color scale.
Set [Technical] – [Exposure Assist] – [Color Scale] to [Enable] in the full menu.

25. **Audio level meter display**
Displays the audio level of CH1 to CH4.

26. **Memory card remaining capacity indicator**

Display	Meaning
A	Mounting/mount status ([Media(A)])
B	Mounting/mount status ([Media(B)])
I	Recording active status indicator
●	Playback active status indicator (“●” displayed on top right of media icon)
Px	Proxy recording indicator

A (Write-protected) icon appears if the memory card is write-protected.

27. **Clip name display**
Displays the name of the clip being recorded or to record next.

28. **Depth-of-field indicator**
29. **Recording mode, slot A/B status, operating status indicator**

Display	Meaning
Stby	Recording standby
● Rec	Recording

30. **Look name display**
Displays the selected look.

31. **Time data display**
32. **Focus indicator**
33. **Focus mode indicator**

Display	Meaning
Focus Hold	[Focus Hold] mode
MF	MF mode
AF	AF mode
Full MF	Full MF mode
	Realtime tracking AF mode
Subject recognition AF (AF / / Only / / / / / /)	
	Human detection icon
Only	Human only detection AF icon
	Human only detection AF icon (Saved tracking face)
	Animal detection icon
	Bird detection icon
	Animal/bird detection icon
	Saved tracking face icon
	AF paused icon[1)]

1) Displayed during auto focus operation when auto focus operation cannot continue and temporarily stops. The icon disappears when the cause for stopping auto focus operation is resolved and then auto focus operation resumes.

34. **Zoom position indicator**
Displays the zoom position in the range 0 (wide angle) to 99 (telephoto) (if a lens that supports zoom setting display is attached).
It can also be changed to a bar display or focal length display.
The following items are added to the display when Clear Image Zoom is enabled.

Display	Meaning
	Clear Image Zoom is enabled
Magnification value	When using Clear Image Zoom

35. **Spirit level indicator**
    Displays the horizontal tilt in ±1° increments up to ±15° in landscape orientation or up to ±10° in portrait orientation.

36. **Look name display**
37. **Recording format (picture size/codec) indicator**
    Displays the name of the format and picture size for recording on the memory cards.

38. **Base sensitivity indicator / Base ISO indicator**
39. **Anamorphic de-squeeze ratio indicator**
40. **Imager mode indicator**
41. **Realtime tracking AF stop button**

Information displayed on the screen during playback

The following information is superimposed on the playback picture.

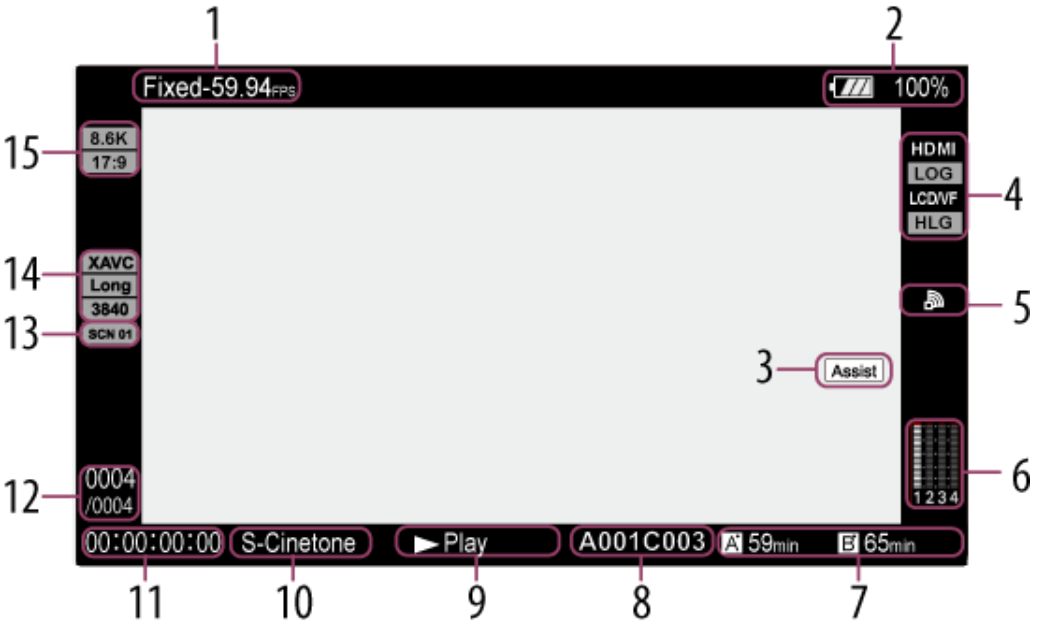

1. **Playback format indicator (frame rate and project frame rate)**
2. **Power status indicator**
3. **Gamma display assist indicator***
4. **Output look indicator**
5. **Network status indicator**
6. **Audio level meter display**
7. **Memory card indicator**
8. **Clip name display**
9. **Playback status indicator**
10. **Look name display**
11. **Time data display**
12. **Clip number / Total number of clips indicator**
13. **Look name display**
14. **Playback format (picture size) indicator**
15. **X-OCN image size indicator**

Icons

Network connection icons

Network mode	Connection status	Icon
Access point mode	Operating as an access point	AP
	Access point operation error	AP (Icon flashing)
Station mode	Wi-Fi connected Wi-Fi signal strength (4 levels)	
	Wi-Fi disconnected (including when establishing connection)	(Icon flashing)
	Wi-Fi connection error	(Icon flashing)
Wired LAN	Wired LAN connected	
	Wired LAN disconnected	(Icon flashing)
	Wired LAN error	(Icon flashing)
USB tethering	USB tethering connected	
	USB tethering disconnected	(Icon flashing)
	USB tethering error	(Icon flashing)
Bluetooth	Bluetooth function on	

UWP-D series icons

Transmitter status	Receive status	Icon
Power off	Not receiving	
Normal transmit status	Receiving	~ (4-level signal strength indicator)
Muting status	Receiving (muted)	
Remaining battery capacity warning status	Receiving	(Icon flashing)
Muting and remaining battery capacity warning status	Receiving	(Icon flashing)

Related Topic

- Connecting with “Monitor & Control”
- Connecting to the Internet via Wireless LAN
- Connecting to the Internet via USB Tethering
- Connecting to the Internet via Wired LAN
- Basic Shooting Procedure
- Adjusting the Gain
- Streaming
- Selecting Fixed/Variable Frame Rate (Slow & Quick Motion)
- Using Image Stabilization
- Checking the Remaining Recording Time
- Adjusting the White Balance Manually
- Synchronizing Timecode with an External Device
- Selecting a Look
- Storing a Look as a Scene File

- Items Saved in Files
- Structure of the Clip List Screen
- Video Signal Monitor
- Gamma Display Assist Function
- Proxy Recording
- Stopping Realtime Tracking AF

TP1002215250

5-076-802-11(2) Copyright 2026 Sony Corporation

Interchangeable Lens Digital Camera
ILME-FX5/ILME-FX5B

Home Screen

Press the HOME button to display the Home screen on the LCD monitor. You can check the status of the unit and set basic items on the Home screen.

A: Item name / Setting value / Function display area
B: Status display area

Hint

- In the factory default setting, pressing the multi-function dial or an assignable button assigned with [Direct Menu] in information display mode displays a cursor on the Home screen, allowing you to change the settings of each item. To perform direct menu operations using an external monitor, set [Technical] – [Menu Settings] – [Info. Disp. Mode Operation] to [Direct Menu Priority] in the full menu.

Item name / Setting value / Function display area

Select items displayed in 1 to 6 to set the corresponding item.

1. **[FPS]**
   Displays and sets the shooting frame rate.

2. **[Exposure Index] / [Base ISO]**
   Displays and sets [Exposure Index] and [Base ISO].

   Hint

   - In [Flexible ISO] mode, displays/sets [ISO] / [Base ISO]. In [Custom] mode, displays/sets [ISO] / [Base Sensitivity] or [Gain] / [Base Sensitivity].

3. **[Shutter]**
   Displays and sets the electronic shutter.

4. **[Iris]**
   Displays and sets the iris.

5. **[Look]**
   Displays and sets the look.

> **Hint**
>
> - In [Custom] mode, this displays and sets scene files.

6. **[WB] ([White Balance])**
   Displays and sets the white balance.

Status display area

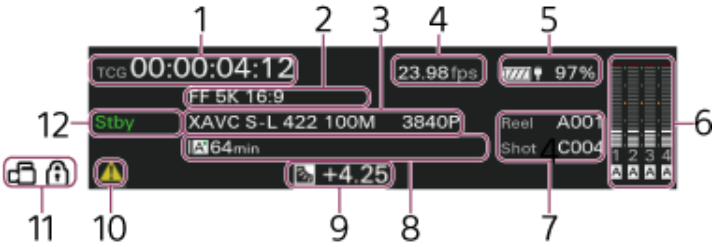

1. **Time data display**
   Displays the duration, user bits, or timecode, depending on the [TC/Media] – [TC Display] setting in the full menu.
   Displays the type of data currently shown in the time data display, as follows.
   TCG: Recorded timecode
   EXT-LK: External sync lock
   UBG: Recorded user bits
   TCR: Playback timecode
   UBR: Playback user bits
   Clk: Clock
   Dur: Duration

2. **Imager mode / Anamorphic lens ratio indicator**
   Displays the [Project] – [Imager Mode] / [Anamo. De-Squeeze] setting in the menu.

3. **Recording format (codec) / Image resolution indicator**
   Displays the name of the format used for recording on a memory card and the image resolution.

4. **Project frame rate indicator**
   Displays the [Project] – [Project Frame Rate] setting in the menu.

5. **Power status indicator**
   Displays the remaining battery charge.

6. **Audio level meter**
   Displays the audio level of CH1 to CH4.

7. **Clip name display**
   When [Auto Naming] is set to [Cam ID + Reel#]:
   Displays “Reel: camera ID + reel number” and “Shot: camera position + shot number.”
   When [Auto Naming] is set to [Title]:
   Displays “Title: character string set using [Title Prefix]” and “No.: clip number.”

8. **Remaining media capacity indicator**
   Displays the status and remaining recording time (when recording in the current recording format) of each recording media.

9. **Auto exposure adjustment operating mode and level indicator**

Display	Meaning
	Backlight mode
AE	Standard mode
	Spotlight mode

10. **Warning/error icon**
    Displayed when a warning or error occurs.
    You can check the content of warnings and errors by displaying the menu. If the screen display is superimposed on an external monitor, you can also check on the external monitor.

11. **Key lock status indicator**

12. **Recording status indicator**
    Displays the following recording operation states of the unit.

Display	Meaning
Stby	Recording standby
● Rec	Recording
Int Stby	Interval standby in Interval Rec mode
● Int Rec	Recording in Interval Rec mode (image capture interval)
● Int Stby	Recording in Interval Rec mode (image not being captured)

Basic operations on the Home screen

1. **Press the HOME button.**
   The Home screen appears on the LCD monitor.

2. **Select the item to set from items 1 to 6.**
   In addition to selecting items using touch operation, you can also use the multi-function dial and multi selector when [Technical] – [Menu Settings] – [Info. Disp. Mode Operation] is set to [Home Screen Priority] in the full menu.
   First, press the multi-function dial or an assignable button assigned with [Direct Menu] to display the cursor, then use the multi-function dial or multi selector to move the cursor. The cursor will disappear if 3 seconds have elapsed without any operation.

Note

- When [Technical] – [Menu Settings] – [Info. Disp. Mode Operation] is set to [Direct Menu Priority] in the full menu, no operation can be performed by pressing the multi-function dial. Touch one of the items.

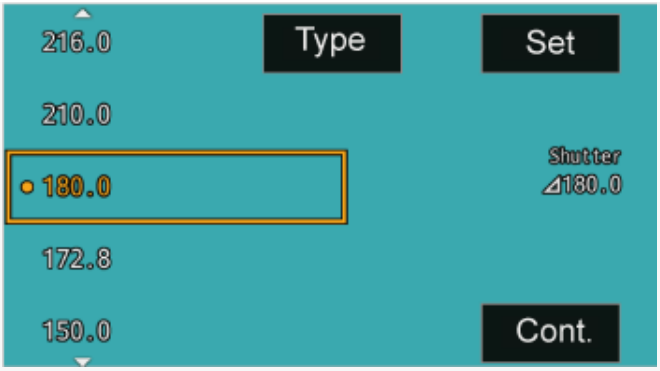

The setting selection screen appears. The diagram above shows an example when item 3 is selected.

3. **Move the cursor to the selection item or setting.**

4. **Select the [Set] button to apply the value.**

Hint

- On the setting selection screen, you can also use the multi-function dial or multi selector to move the cursor. After positioning the cursor and pressing the multi-function dial or multi selector, select the [Set] button to apply the value.

Home screen items

The settings that can be configured for each item are given below. For details about items with the same settings as in the full menu, refer to the full menu description.

Item	Description
[FPS]	Sets whether the shooting frame rate is set to the project frame rate or is different from the project frame rate. ● [Fixed] When [Fixed] is selected on the settings screen, the shooting frame rate matches the project frame rate, and [Fixed] and the project frame rate are displayed. ● [Variable] When [Variable] is selected on the settings screen, you can set a shooting frame rate that is different from the project frame rate. 1 to 60 / 66 / 72 / 75 / 88 / 90 / 96 / 100 / 110 / 120 / 150 / 180 / 200 / 240 FPS **Note** ● The range of settings will vary depending on the selected project frame rate, codec, and video format. **Hint** ● The setting is equivalent to [Shooting] – [FPS] in the full menu.

Item	Description
[ISO/Gain] / [Base Sensitivity] ([Custom] mode)	Sets ISO/Gain. You can press [Base Sensitivity] to set the base sensitivity . You can press [AGC] to set the auto gain control function. **Hint** • [ISO/Gain] is equivalent to [Shooting] – [ISO/Gain] – [ISO/Gain Select] in the full menu. [Base Sensitivity] is equivalent to [Shooting] – [ISO/Gain] – [Base Sensitivity] in the full menu. • [AGC] is equivalent to [Shooting] – [Auto Exposure] – [AGC] in the full menu.
[ISO] / [Base ISO] ([Flexible ISO] mode)	Sets ISO. You can press [Base ISO] to set the base ISO sensitivity. You can press [AGC] to set the auto gain control function. **Hint** • [ISO] is equivalent to [Shooting] – [ISO/Gain] – [ISO/Gain Select] in the full menu. [Base ISO] is equivalent to [Shooting] – [ISO/Gain] – [Base ISO] in the full menu. • [AGC] is equivalent to [Shooting] – [Auto Exposure] – [AGC] in the full menu.
[Exposure Index] / [Base ISO] ([Cine EI] / [Cine EI Quick] mode)	Sets Exposure Index. You can press [Base ISO] to set the base ISO sensitivity. **Hint** • In [Cine EI Quick] mode, only [Exposure Index] is configured. • [Exposure Index] is equivalent to [Shooting] – [Exposure Index] in the full menu. [Base ISO] is equivalent to [Shooting] – [ISO/Gain] – [Base ISO] in the full menu.
[Shutter]	Sets the electronic shutter. • When [Shooting] – [Shutter] – [Mode] is set to [Angle] in the full menu Sets the opening angle of the electronic shutter. Press [Step] or [Cont.] to switch to a preset angle or continuous shutter angle setting, respectively. • When [Shooting] – [Shutter] – [Mode] is set to [Speed] in the full menu Sets the shutter speed of the electronic shutter. Press [Step] or [Cont.] to switch to a preset time or continuous time setting, respectively. You can press [Type] to set the auto shutter control function. **Hint** • [Angle] – [Step] / [Cont.] is equivalent to [Shooting] – [Shutter] – [Angle (Step)] / [Angle (Continuous)] in the full menu. • [Speed] – [Step] / [Cont.] is equivalent to [Shooting] – [Shutter] – [Speed (Step)] / [Speed (Continuous)] in the full menu. • [Auto Shutter] is equivalent to [Shooting] – [Auto Exposure] – [Auto Shutter] in the full menu.
[Iris]	Sets the iris. You can press [Auto] to set the auto iris function.

Item	Description
[Scene File] ([Custom] mode)	Switches to preconfigured image quality settings. In addition to the pre-installed image quality settings, you can save and switch to your preferred image quality settings . **Hint** • The setting is equivalent to [Paint/Look] – [Scene File] – [Recall Internal Memory] in the full menu.
[Look] (Log shooting mode)	Sets the look. Press the [Edit Look] button (item 4) and select a look. You can set the output systems to which to apply a look using items 1 and 6. Depending on the status, there are combinations that cannot be set or settings that are interdependent. **Hint** • This setting is equivalent to [Paint/Look] – [Base Look] – [Select] and items under [Shooting] – [LUT On/Off] in the full menu.
[WB] ([White Balance])	Sets the white balance. Eight white memory positions (A/B/C/D/E/F/G/H) are provided. You can set values using the following methods. • Setting separate color temperature and tint values • Setting using auto white balance • Selecting specific preset values • Setting ATW **Hint** • The setting is equivalent to items under [Shooting] – [White Balance] in the full menu. • You can adjust the white balance settings from the Home screen by selecting the granularity of the color temperature value from [Coarse] / [Fine]. [Coarse]: 100K increments [Fine]: 1K increments

Related Topic

- Multi-Function Dial
- Direct Menu
- Assignable Buttons

TP1002295521

5-076-802-11(2) Copyright 2026 Sony Corporation

Interchangeable Lens Digital Camera
ILME-FX5/ILME-FX5B

User Functions Screen

The user functions screen is a screen for quickly calling functions that you want to execute or set before or during shooting. You can assign frequently used functions or routine functions, and operate them like soft buttons from the Home screen, shooting screen, full menu screen, playback screen, or clip list screen.

Press the USER button to display the user functions screen on the LCD monitor.
You can assign functions to [User 1] to [User 6] on the user functions screen using [Project] – [Assignable Button] – [<User 1>] to [<User 6>] in the full menu.

In video monitoring mode

In information display mode

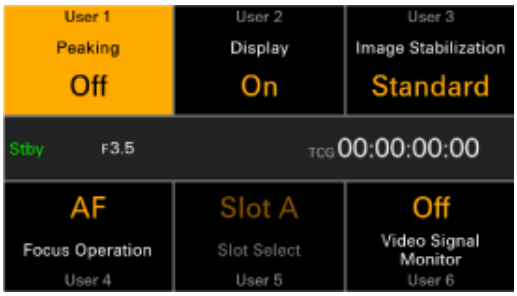

Related Topic

- Assignable Buttons

TP1002295522

5-076-802-11(2) Copyright 2026 Sony Corporation

Interchangeable Lens Digital Camera
ILME-FX5/ILME-FX5B

Menu Screen

You can check the settings and status of the unit on the menu screen.

To display the menu

- Press the MENU button.

To switch the menu screen

Select an item (1 to 6) on the screen to display the corresponding screen.
With an item selected, you can also switch screens by turning the multi selector or multi-function dial left/right.
Pressing item 6 on the selected category screen will display the full menu for the selected category.

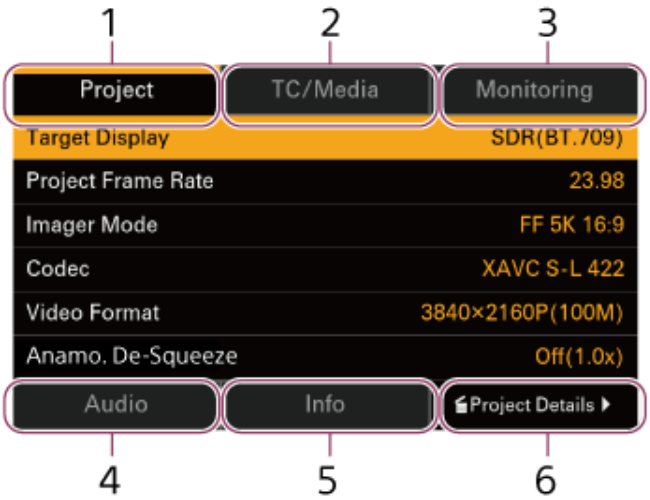

To exit the menu

- Press the MENU button.

To change a setting

With the menu screen displayed, press the multi-function dial or multi selector to enable selection of a setup item on the screen.
You can also select items directly using touch operation.

[Project] category

Use to set and check basic settings and recording format.

Display item	Description	Corresponding full menu item
[Target Display]	Sets the video standard for recording/output in [Custom] shooting mode.	[Base Setting] – [Target Display]
[Input Color Space]	Sets the color gamut.	[Base Setting] – [Cine EI/Flexible ISO Setting] – [Input Color Space]
[Project Frame Rate]	Selects the project frame rate.	[Rec Format] – [Project Frame Rate]
[Imager Mode]	Sets the effective picture size.	[Rec Format] – [Imager Mode]
[Codec]	Sets the codec.	[Rec Format] – [Codec]

Display item	Description	Corresponding full menu item
[Video Format]	Sets the recording format.	[Rec Format] – [Video Format]
[Anamo. De-Squeeze]	Sets the de-squeeze ratio for the image displayed on the specified output system when shooting with an anamorphic lens.	[Anamo. De-Squeeze] – [Ratio]

[TC/Media] category

Use to set and check the timecode value and TC format.

Display item	Description	Corresponding full menu item
[TC Mode/Run]	Sets the timecode running mode.	[Timecode] – [Mode] / [Run]
[TC Display]	Switches the time data display.	[TC Display] – [Time Data Display]
[TC Setting]	Sets the timecode to an arbitrary value. Resets the timecode to 00:00:00:00. Sets the timecode format.	[Timecode] – [Manual Setting] / [Reset] / [TC Format]
[Camera ID]	Sets the camera ID used when generating clip names.	[Clip Name Format] – [Camera ID]
[Reel Number]	Sets the [Reel Number] numeric part used when generating clip names.	[Clip Name Format] – [Reel Number]
[Camera Position]	Sets the shot number prefix used when generating clip names.	[Clip Name Format] – [Camera Position]
[Clip Name]	Displays the title portion of the clip name when [Auto Naming] is set to [Title].	[Clip Name Format] – [Title Name Settings]
[Format Media]	Formats the memory card in card slot A or B.	[Format Media] – [Media(A)] / [Media(B)]

[Monitoring] category

Use to set and check the signal format, on-screen display, and marker overlay status on the HDMI, LCD monitor, and viewfinder external outputs.

Display item		Description	Corresponding full menu item
[LCD/VF]	[Frame Line]	Selects the frame line to display superimposed over the LCD monitor and viewfinder image.	[Frame Line]
[HDMI]	[Output Format]	Sets the HDMI output resolution.	[Output Format]
	[Info. Disp.]	Turns HDMI screen display output on/off.	[Output Display]
	[Frame Line]	Selects the information to display superimposed over the HDMI output.	[Frame Line]
[IP]	[Output Format]	Displays the resolution of streaming.	[Stream] – [RTMP/RTMPS 1] to [RTMP/RTMPS 3] – [Resolution] [Stream] – [SRT-Caller 1] to [SRT-Caller 3] – [Resolution]
	[Info. Disp.]	Displays the status of information displayed superimposed on the streaming output ([Off] (fixed)).	–
	[Frame Line]	Displays the status of frame lines, etc., displayed superimposed in the streaming output ([Off] (fixed)).	–

[Audio] category

Use to set and check audio sources, levels, and other settings.

Display item		Description	Corresponding full menu item
Inputs	[CH1 Level Control] to [CH4 Level Control]	Turns auto adjustment on/off.	[Audio Input] – [CH1 Level Control] to [CH4 Level Control]
	[CH1 Input Level] to [CH4 Input Level]	Adjusts the input level of recording channels.	[Audio Input] – [CH1 Input Level] to [CH4 Input Level]
	[Audio Rec Format] (CH1 to CH4)	Displays the audio recording format.	[Audio Rec Format] – [Audio Rec Format]
	[32bit float WAV Rec] (CH1 to CH4)	Displays the 32-bit float audio data recording status.	[32bit float WAV Rec] – [Setting]
	[CH1 Input Select] to [CH4 Input Select]	Switches the input source.	[Audio Input] – [CH1 Input Select] to [CH4 Input Select]
	[CH1 Wind Filter] to [CH4 Wind Filter]	Sets the microphone wind noise reduction filter.	[Audio Input] – [CH1 Filter] to [CH4 Filter] – [Wind Filter]
	[Noise Cut Filter] (CH1 to CH4)	Sets noise reduction.	[Audio Input] – [CH1 Filter] to [CH4 Filter] – [Noise Cut Filter]
	[Audio Input Level]	Sets the audio input level.	[Audio Input] – [Audio Input Level]
Outputs	[HDMI Out CH]	Sets the combination of audio channels output for HDMI only or for HDMI and streaming.	[Audio Output] – [HDMI Out CH]
	[Volume]	Set the monitoring audio level of the headphones connector and built-in speaker.	[Audio Output] – [Volume]
	[Monitor CH]	Sets the audio channel output to the headphones connector and built-in speaker.	[Audio Output] – [Monitor CH]

[Info] category

Use to check the status of the unit, media, and battery.

No.	Page	Description
1	[Camera Condition]	Displays warning messages and error messages. When there are no messages, “All Systems are OK” is displayed at the top of the display area.
2	[Firmware]	Displays the serial number and firmware version of the unit.
3	[System]	Displays the following system information. • Set date and time • Sensor detection temperature • Hours meter

No.	Page	Description
4	[Battery]	Displays the following battery information. ● Battery type ● Battery remaining capacity ● Battery status ● Battery version ● Date of manufacture ● USB power delivery port ● Power supply type
5	[Media]	Displays the remaining capacity, remaining recording time, and lifespan data of the memory cards.
6	[Lens]	Displays the following information about the attached lens. ● Lens model name ● Lens serial number ● Iris F-number ● Focal length ● Focus distance ● Depth of field **Note** ● The focus distance displayed on the screen is an estimate.

TP1002295523

5-076-802-11(2) Copyright 2026 Sony Corporation

Inserting/Removing the Battery Pack

1. **Slide the switch on the battery cover to open the cover.**

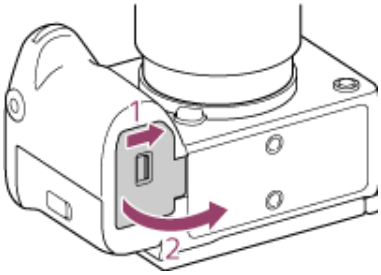

2. **Insert the battery pack while pressing the lock lever (A) with the edge of the battery until the battery locks into place.**

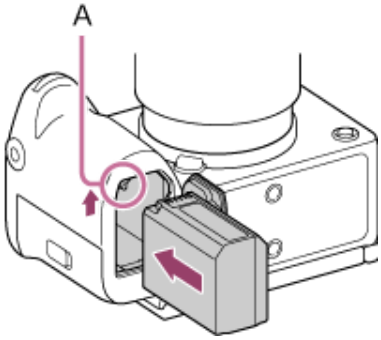

3. **Close cover and slide the switch to the LOCK position.**

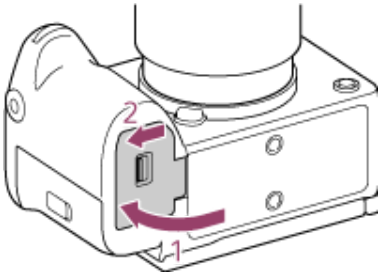

To remove the battery pack

Check that the access lamp is not lit, then turn the unit off and slide the lock lever (A) to remove the battery. Take care not to drop the battery.

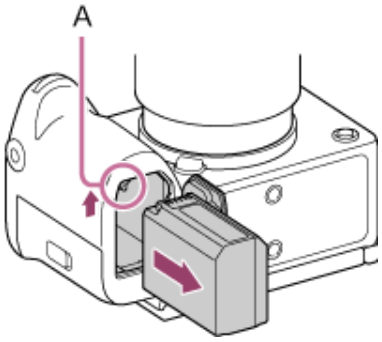

5-076-802-11(2) Copyright 2026 Sony Corporation

Interchangeable Lens Digital Camera
ILME-FX5/ILME-FX5B

Charging the Battery using the Supplied Charger

Prepare the following commercially available products that support USB PD (USB Power Delivery).

- 45 W (min) USB Type-C cable (USB-C® to USB-C)
- External power supply with 45 W (min) output

For details about supported output of USB Type-C cables and external power supplies, visit the following website.
https://www.sony.net/di-power_reqmts/

1. **Insert the battery in the battery charger, connect the battery charger to the external power supply (USB PD compatible) using a commercially available USB Type-C cable (USB PD compatible).**
   - The STATUS lamp (A) lights up before charging begins, and charging starts after it turns off. If the STATUS lamp does not light up and charging does not begin, check that the battery is inserted correctly.
   - When charging two batteries simultaneously, it is possible to charge them using an external power supply with an output rating of 18 W to 45 W, but the charging time may be longer.
   - If you use an external power source or USB Type-C cable other than those specified above, charging may not be performed correctly.
   - When two batteries are inserted, both batteries are charged at the same time.
   - Depending on the external power source you are using, the STATUS lamp may flash repeatedly before charging begins. However, once the STATUS lamp turns off and the charging status indicator lamps (B) turn on or flash, charging will proceed normally.

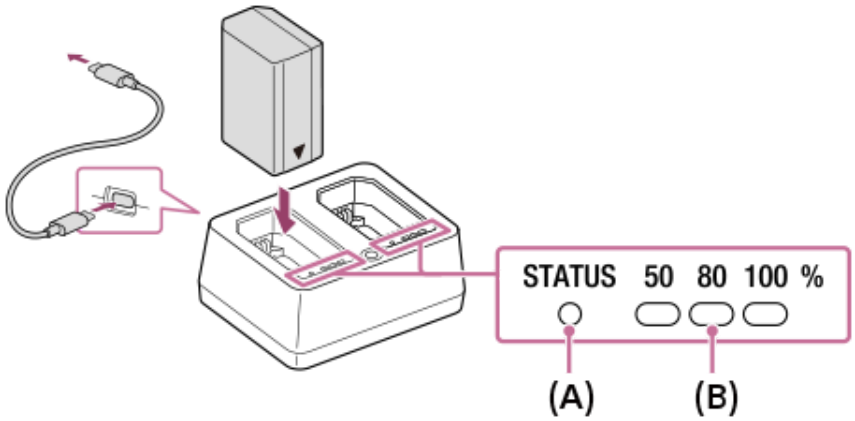

Charging status indicator lamps

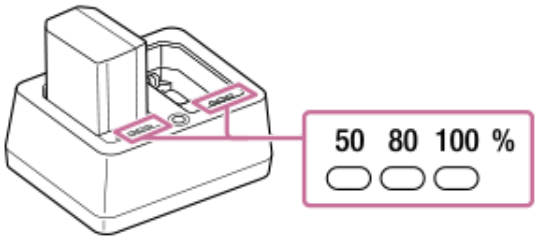

The charging status indicator lamps indicate the approximate charging status as shown in the following table (orange indicates a lit lamp).

Charging status	Charging status indicator lamps
0% to 50%	☀ ▭ ▭

Charging status	Charging status indicator lamps
50% to 80%	
80% to fully charged	
Charging completed	

The charge level shown by the charging status indicator lamps and the percentages in the table above are rough guides.

Estimated charging time (full charge)

Number of batteries to be charged	Full charge time (Output of the cable and power supply used)
1	Approx. 85 minutes (27 W or higher)
2	Approx. 115 minutes (45 W or higher)

- The above charging time applies when charging a fully discharged battery pack at a temperature of 25 °C (77 °F) using the supplied charger.
- The charging time stated above may vary depending on the ambient temperature, the condition of the battery pack, and the USB Type-C cable or external power supply you are using.
- Charging a battery that hasn't been used for a long time may take longer.

Checking the battery status

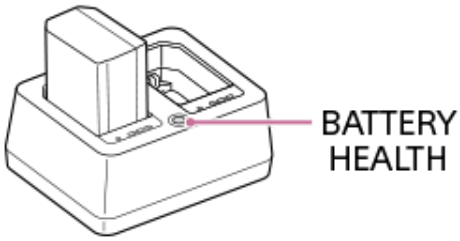

You can check the battery status using the STATUS lamp and charging status indicator lamps while the BATTERY HEALTH button is pressed.

Battery status	Charging status indicator lamps
Good	
Slightly deteriorated	
Poor (replacement is recommended)	

Hint

- You can check the battery status on the [Battery] page of the [Info] category in the menu. Insert the battery pack to check in the camera.

Note

- When using an external power supply, use a nearby power outlet. If a problem occurs during operation, immediately disconnect the plug from the power outlet.
- Before charging, be sure to read "Notes on the Battery Pack and Charging the Battery."

Related Topic

- Menu Screen
- Inserting/Removing the Battery Pack
- Notes on the Battery Pack and Charging the Battery

TP1002274773

5-076-802-11(2) Copyright 2026 Sony Corporation

Charging the Battery using a USB PD Compatible Device

Prepare the following commercially available products that support USB PD (USB Power Delivery).

- 27 W (min) USB Type-C cable (USB-C to USB-C)
- External power supply with 27 W (min) output (9 V, 3 A)

For details about supported output of USB Type-C cables and external power supplies, visit the following website.
https://www.sony.net/di-power_reqmts/

1. **Turn the camera off.**

2. **Connect a USB Type-C connector of the camera to the USB Type-C connector of the external power supply (USB PD compatible) using a commercially available USB Type-C cable (USB PD compatible).**

   You can charge the battery using the USB Type-C connector of either USB PORT 1 or USB PORT 2. The charging time is the same regardless of which connector you use.

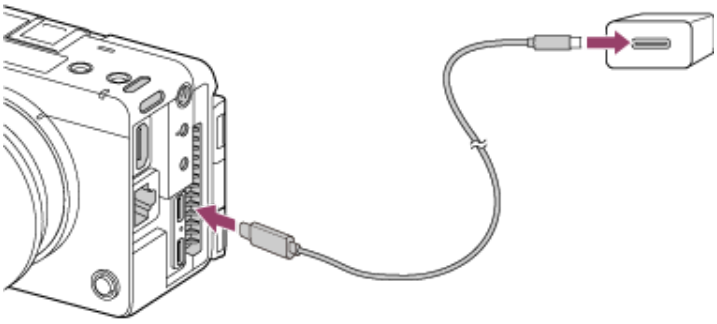

Charging lamp of the camera (orange)
Lit: Charging
Off: Charging finished
Flashing: Charging error or charging paused temporarily because the camera is not within the proper temperature range

- The charging lamp turns off when charging is completed.
- If the charging lamp lights up and then immediately turns off, the battery pack is fully charged.

Hint

- While it is possible to charge the battery from a USB PD-compatible device with an output rating lower than 27 W, the charging time will be longer.
- The battery can also be charged using devices that do not support USB PD. Use a commercially available USB Type-C cable (USB-A to USB-C). To use an AC adaptor, use an AC adaptor with an output current rating of 1.5 A or higher.
  The charging time is longer than with USB PD compatible devices.
- You can check the battery status on the [Battery] page of the [Info] category in the menu. Insert the battery pack to check in the camera.

Note

- To use an AC adaptor, use a nearby power outlet. If a problem occurs during operation, immediately disconnect the plug from the power outlet. On models with a charging lamp, the power supply is not disconnected when the light turns off.
- If you turn the unit on while it is charging, power will be supplied from the power outlet enabling use of the unit, but the battery will stop charging.

- If the unit is connected to a laptop computer that is not connected to a power source, the laptop battery level will decrease. Do not leave it unattended for an extended period of time.
- Do not start, restart, wake from sleep mode, or shut down your computer while the unit is connected via USB. Doing so may cause a malfunction. Before performing these operations, disconnect the unit from the computer.
- Charging cannot be guaranteed with a custom-built computer, modified computer, or a computer connected via a hub.
- The unit may not operate correctly when other USB devices are used at the same time.
- Before charging, be sure to read “Notes on the Battery Pack and Charging the Battery.”

Related Topic

- Menu Screen
- Inserting/Removing the Battery Pack
- Notes on the Battery Pack and Charging the Battery

TP1002274775

5-076-802-11(2) Copyright 2026 Sony Corporation

Using the Camera with a USB Power Supply

You can supply power to the camera via USB from an external power source during shooting and playback, reducing battery consumption and maintaining a consistent power supply to the camera.
Prepare the following commercially available products that support USB PD (USB Power Delivery).

- 27 W (min) USB Type-C cable (USB-C to USB-C)
- External power supply with 27 W (min) output (9 V, 3 A)

For details about supported output of USB Type-C cables and external power supplies, visit the following website.
https://www.sony.net/di-power_reqmts/

1. **Insert a sufficiently charged battery pack into the camera.**

   The unit will not function if there is insufficient remaining battery capacity. Prepare a sufficiently charged battery pack.

2. **Connect a USB Type-C connector of the camera to the external power supply (USB PD compatible) using a commercially available USB Type-C cable (USB PD compatible).**

   You can supply power to the USB Type-C connector of either USB PORT 1 or USB PORT 2. Set [Technical] – [Power Settings] – [USB Power Supply] to [Auto] / [PORT1] / [PORT2] in the full menu.

3. **Turn the camera on.**

   An icon ( ) indicating the USB power supply appears next to the battery indicator on the monitor, and power supply begins.

Hint

- While it is possible to supply power from a USB PD-compatible device with an output rating lower than 27 W, battery consumption may increase when supplying power.
- Power can also be supplied using devices that do not support USB PD. Use a commercially available USB Type-C cable (USB-A to USB-C). To use an AC adaptor, use an AC adaptor with an output current rating of 1.5 A or higher.

Note

- While the unit is turned on and in use, the battery is not being charged, even if connected to an external power supply.
- Under certain conditions, supplementary power may be supplied from the battery pack even if using an external power supply.
- Do not remove the battery pack while power is supplied from an external power supply. The camera will turn off if the battery pack is removed.
- Connect/disconnect the USB cable while the camera is turned off.
- When using a USB power supply, the continuous video recording time may be shortened due to the increase in internal temperature. The area around the connector may become hot.
- When using a mobile charger as an external power supply, confirm that it is fully charged before use. Also, be careful of the remaining capacity of the mobile charger during use.
- Operation is not be guaranteed with all external power supplies.
- USB power delivery cannot be used when [Technical] – [USB] – [USB Cnct Mode (PORT1)] / [USB Cnct Mode (PORT2)] is set to [USB Tethering] or [USB Timecode] in the full menu. Check the setting for the port you want to use for USB power delivery.

Related Topic

- Inserting/Removing the Battery Pack
- [Technical] Menu

TP1002274776

5-076-802-11(2) Copyright 2026 Sony Corporation

Switching the Power On/Off

To switch the power on, set the switch to the ▌(on) position. To switch the power off, set the switch to the ⏻ (off) position.

Note

- Even when the power switch is set to the ⏻ (off) position, the unit continues to draw standby electric power. If not using the unit for an extended period, remove the battery pack.
- Remove the battery pack or disconnect the AC adaptor after the power lamp is extinguished when the power switch is set to the ⏻ (off) position. If the power source is removed while the power switch is in the ▌(on) position, the unit or memory cards may become damaged.

TP1002215255

5-076-802-11(2) Copyright 2026 Sony Corporation

Battery Usage Time

Usage time during normal recording

When using the LCD monitor	Approx. 105 minutes

Usage time during continuous recording

When using the LCD monitor	Approx. 170 minutes

- The usage time is an estimate based on a fully charged battery pack. The time may decrease depending on actual usage.
- The usage time is estimated under the following conditions, using the factory default settings at the time of purchase.
  - Temperature of 25 °C (77 °F)
  - Using Sony CFexpress Type A memory cards (sold separately)
  - Using FE 28-70mm F3.5-5.6 OSS II lens (sold separately)
- The video recording values are based on CIPA standards when shooting under the following conditions.
  - Video quality: XAVC S-L 422 FF 5K 16:9 23.98p
  - Video recording process: Repeated recording, recording standby, and power on/off.
  - Continuous video recording process: No operations other than starting and stopping recording.

TP1002495096

5-076-802-11(2) Copyright 2026 Sony Corporation

Date and Time

The initial setup screen appears on the LCD monitor the first time the unit is turned on or after the backup battery has become completely discharged.
Set the date and time of the internal clock using this screen.

About [Time Zone]

Set the time difference from UTC (Coordinated Universal Time). Change the setting as required.
Use the multi selector or the multi-function dial to select items and settings, then press the multi selector or multi-function dial to apply the settings and start the clock running.
Once the setup screen is closed, you can change the date, time, and [Time Zone] settings using [Maintenance] – [Clock Set] in the full menu.

Note

- If the clock setting is lost because the backup battery becomes fully discharged due to power being disconnected for an extended period (no battery pack and no AC adaptor), the initial setup screen will be displayed when you next turn the unit on.
- While the initial setup screen is displayed, no other operation, except turning the power off, is permitted until you finish the settings on this screen.
- The unit has a built-in rechargeable battery for storing the date, time, and other settings even when the unit is turned off.

TP1002215256

5-076-802-11(2) Copyright 2026 Sony Corporation

Accessibility Functions

The unit is equipped with accessibility functions to assist your vision. It has a screen reader function, which reads aloud the text and other information on the screen, and a screen magnifier function.
You can configure the accessibility functions on the initial setup screen or using [Maintenance] – [Accessibility] in the full menu.

Screen reader function

You can turn the screen reader function on/off and configure settings, such as the read speed, using [Maintenance] – [Accessibility] – [Screen Reader] in the full menu.

Screen magnifier function

You can turn the screen magnifier function on/off and configure settings, such as the magnification factor, using [Maintenance] – [Accessibility] – [Enlarge Screen] in the full menu.

Hint

- Some display elements, in addition to the recorded image and playback image, are not displayed enlarged.

Related Topic

- Using the Screen Reader
- Magnifying the Screen Display

TP1002215257

5-076-802-11(2) Copyright 2026 Sony Corporation

Configuring Basic Operation

Before shooting, configure the basic operation of the unit using [Project] in the menu to suit the usage application.

Imager mode and recording formats

The recording formats (codec, picture size, frame rate) and shooting frame rates available for selection vary as follows depending on the [Project Frame Rate] and [Imager Mode] combination.

XAVC HS-L 422 / XAVC HS-L 420 / XAVC S-L 422

		XAVC HS-L 422	XAVC HS-L 420	XAVC S-L 422	
[Project Frame Rate]	[Imager Mode]	3840×2160P	3840×2160P	3840×2160P	1920×1080P
119.88/100	FF 5K 16:9	Fixed	Fixed	Fixed	–
	FFc 4.5K 16:9	Fixed	Fixed	Fixed	–
59.94/50	FF 5K 16:9	Up to 120fps Up to 60fps[1)]	Up to 120fps Up to 60fps[1)]	Up to 120fps Up to 60fps[1)]	Up to 240fps
	FFc 4.5K 16:9	Up to 120fps	Up to 120fps	Up to 120fps	–
	S35 3.2K 16:9	–	–	–	Up to 240fps
29.97/25	FF 5K 16:9	–	–	Up to 120fps Up to 60fps[1)]	Up to 240fps
	FFc 4.5K 16:9	–	–	Up to 120fps	–
	S35 3.2K 16:9	–	–	–	Up to 240fps
23.98	FF 5K 16:9	Up to 120fps Up to 60fps[1)]	Up to 120fps Up to 60fps[1)]	Up to 120fps Up to 60fps[1)]	Up to 240fps
	FFc 4.5K 16:9	Up to 120fps	Up to 120fps	Up to 120fps	–
	S35 3.2K 16:9	–	–	–	Up to 240fps

1) When dual gain is enabled

XAVC S-L 420 / XAVC S-I

		XAVC S-L 420		XAVC S-I		
[Project Frame Rate]	[Imager Mode]	3840×2160P	1920×1080P	4096×2160P	3840×2160P	1920×1080P
119.88/100	FF 5K 16:9	Fixed	Fixed	–	–	–
	FFc 4.5K 16:9	Fixed	–	–	–	–
	S35 3.2K 16:9	–	Fixed	–	–	–
59.94/50	FF 5K 17:9	–	–	Up to 120fps Up to 60fps[1)]	–	–
	FF 5K 16:9	Up to 120fps Up to 60fps[1)]	Up to 240fps	–	Up to 120fps Up to 60fps[1)]	Up to 240fps
	FFc 4.5K 17:9	–	–	Up to 120fps	–	–
	FFc 4.5K 16:9	Up to 120fps	–	–	Up to 120fps	–
	S35 3.2K 16:9	–	Up to 240fps	–	–	Up to 240fps
29.97/25	FF 5K 17:9	–	–	Up to 120fps Up to 60fps[1)]	–	–
	FF 5K 16:9	Up to 120fps Up to 60fps[1)]	Up to 240fps	–	Up to 120fps Up to 60fps[1)]	Up to 240fps
	FFc 4.5K 17:9	–	–	Up to 120fps	–	–
	FFc 4.5K 16:9	Up to 120fps	–	–	Up to 120fps	–
	S35 3.2K 16:9	–	Up to 240fps	–	–	Up to 240fps
23.98	FF 5K 17:9	–	–	Up to 120fps Up to 60fps[1)]	–	–
	FF 5K 16:9	Up to 120fps Up to 60fps[1)]	Up to 240fps	–	Up to 120fps Up to 60fps[1)]	Up to 240fps
	FFc 4.5K 17:9	–	–	Up to 120fps	–	–
	FFc 4.5K 16:9	Up to 120fps	–	–	Up to 120fps	–
	S35 3.2K 16:9	–	Up to 240fps	–	–	Up to 240fps
24	FF 5K 17:9	–	–	Up to 120fps Up to 60fps[1)]	–	–
	FFc 4.5K 17:9	–	–	Up to 120fps	–	–

1) When dual gain is enabled

X-OCN / HDMI RAW

		X-OCN			HDMI RAW
[Project Frame Rate]	[Imager Mode]	LT	C1	C2	
59.94/50	FF 5K 3:2	Fixed	Fixed	Fixed	–
	FF 5K 17:9	Fixed	Fixed	Fixed	–
	FF 5K 16:9	Fixed	Fixed	Fixed	–
	FFc 4.5K 17:9	–	–	–	Fixed
	FFc 4.5K 16:9	–	–	–	Fixed
	FFc 3.8K 16:9	Fixed	Fixed	Fixed	–
29.97/25	FF 5K 3:2	Fixed	Fixed	Fixed	–
	FF 5K 17:9	Fixed	Fixed	Fixed	–
	FF 5K 16:9	Fixed	Fixed	Fixed	–
	FFc 4.5K 17:9	–	–	–	Fixed
	FFc 4.5K 16:9	–	–	–	Fixed
	FFc 3.8K 16:9	Fixed	Fixed	Fixed	–
23.98	FF 5K 3:2	Fixed	Fixed	Fixed	–
	FF 5K 17:9	Fixed	Fixed	Fixed	–
	FF 5K 16:9	Fixed	Fixed	Fixed	–
	FFc 4.5K 17:9	–	–	–	Fixed
	FFc 4.5K 16:9	–	–	–	Fixed
	FFc 3.8K 16:9	Fixed	Fixed	Fixed	–
24	FF 5K 3:2	Fixed	Fixed	Fixed	–
	FF 5K 17:9	Fixed	Fixed	Fixed	–
	FF 5K 16:9	Fixed	Fixed	Fixed	–
	FFc 4.5K 17:9	–	–	–	Fixed
	FFc 3.8K 16:9	Fixed	Fixed	Fixed	–

Effective picture size

The unit supports shooting at the following effective picture sizes (Units: mm).

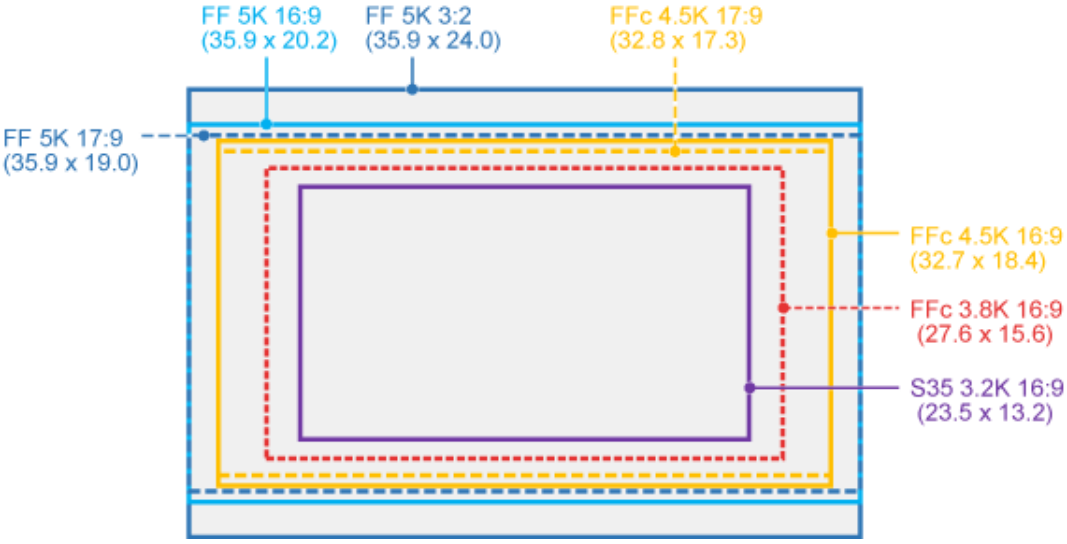

[Imager Mode]	Effective picture elements
FF 5K 3:2	4992×3328
FF 5K 16:9	4992×2808
FF 5K 17:9	4992×2632
FFc 4.5K 16:9	4552×2560
FFc 4.5K 17:9	4552×2400
FFc 3.8K 16:9	3840×2160
S35 3.2K 16:9	3264×1836

TP1002215384

5-076-802-11(2) Copyright 2026 Sony Corporation

Setting the Auto Power Off Function

You can set the time for automatically turning the unit off.
Set using [Technical] – [Power Settings] – [Power Save] in the full menu.

Note

- The auto power off function is not activated in the following cases, even when [Power Save] is not set to [Off].
  - During video recording (including special recording modes)
  - During video playback
  - During streaming
  - During file transfer
  - During function execution (for example, initialization or editing)
  - During firmware version updates (unit or lens)
  - During live video output from HDMI or other connectors
  - During USB communication (host/device)
  - During remote control communication
  - During menu display (for example, full menu or menu)
  - During initial setup
  - During touch operation
  - During memory card access

TP1002295525

5-076-802-11(2) Copyright 2026 Sony Corporation

Shooting Mode

The unit allows you to choose between custom shooting mode for creating images flexibly on-site, or log shooting mode where the unit is operated similarly to a film camera with images being developed in post-production.
Switch using [Project] – [Base Setting] – [Shooting Mode] in the full menu.

Note

- The initial values (such as ISO sensitivity) may vary depending on the shooting mode. When changing the shooting mode, double-check that the settings are as intended.

Custom shooting mode: [Custom]

In [Custom] shooting mode, you can select the video standard.
Switch using [Project] – [Base Setting] – [Target Display] in the full menu.

- [SDR(BT.709)]: Shooting according to HD broadcast standard
- [HDR(HLG)]: Shooting according to 4K broadcast standard

Log shooting mode: [Flexible ISO] / [Cine EI Quick] / [Cine EI]

Record S-Log3 content with exposure settings reflecting the ISO sensitivity matching the scene being shot.
In log shooting mode, you can also select the base color gamut for recorded signals and output signals. The color gamut selected here is the color gamut of the recorded video and the video output when [LUT] is set to [Off].
Switch using [Project] – [Cine EI/Flexible ISO Setting] – [Input Color Space] in the full menu.

- [S-Gamut3.Cine/SLog3]: Easy-to-adjust color gamut for digital cinema (DCI-P3).
- [S-Gamut3/SLog3]: Sony wide color gamut that covers the ITU-R BT.2020 color gamut.

There are three Log shooting modes: [Flexible ISO] / [Cine EI Quick] / [Cine EI].

- [Flexible ISO]: Records S-Log3 content with exposure settings reflecting the ISO sensitivity matching the scene being shot.
- [Cine EI Quick] / [Cine EI]: Records S-Log3 content at the selected base sensitivity (fixed). You can change the distribution between dark and light areas using [Exposure Index]. In [Cine EI Quick] mode, the optimal base sensitivity for the [Exposure Index] setting is selected automatically.

Note

- It is recommended to set a fixed [Exposure Index] setting when recording in [Cine EI Quick] / [Cine EI] mode. If the [Exposure Index] setting is changed, it will be very difficult to correct the brightness in post-production, and you may not be able to reproduce the conditions at the time of shooting.

The functional restrictions for each shooting mode are given below.
✓: Supported
×: Not supported

Item	[Custom]	Log shooting mode		
		[Flexible ISO]	[Cine EI Quick]	[Cine EI]
[ISO/Gain]	✓	✓ (ISO only)	×	×
[AGC]	✓	✓	×	×
[Base Sensitivity]	✓	×	×	×
[Base ISO]	×	✓	✓ (Auto)	✓

Item	[Custom]	Log shooting mode		
		[Flexible ISO]	[Cine EI Quick]	[Cine EI]
[Exposure Index]	×	×	✓	✓
[Auto Shutter]	✓	✓	×	×
[ATW]	✓	✓	×	×
[LUT On/Off]	×	✓	✓	✓
[Paint/Look] (excluding [Base Look])	✓	×	×	×
[Internal Rec / RAW Out] (external RAW output enable setting)	×	✓	✓	✓
Codecs including X-OCN	×	×	×	✓

Related Topic

- Gamma Display Assist Function
- Video Signal Monitor

TP1002215258

5-076-802-11(2) Copyright 2026 Sony Corporation

Recording Format

Project frame rate

You can switch the project frame rate for recording video.
Switch using [Project] – [Project Frame Rate] in the menu. The unit may reboot automatically after switching, depending on the selected value.

Hint

- Can also be configured using [Project] – [Rec Format] – [Project Frame Rate] in the full menu.

Note

- You cannot switch the project frame rate during recording or playback.

Imager mode

You can set the effective picture size and resolution of the image sensor.
Switch using [Project] – [Imager Mode] in the menu.

- FF 5K 3:2, FF 5K 17:9, FF 5K 16:9, FFc 4.5K 17:9, FFc 4.5K 16:9, FFc 3.8K 16:9: Use for full-frame size.
- S35 3.2K 16:9: Use for Super 35mm size.

Hint

- Can also be configured using [Project] – [Rec Format] – [Imager Mode] in the full menu.

Note

- You cannot switch the imager mode during recording or playback.

Internal recording / RAW output

You can set the internal recording and external RAW output combination.
Set using [Project] – [Rec Format] – [Internal Rec / RAW Out] in the full menu.

Note

- The following imager modes are required to configure external RAW output.
  - FFc 4.5K 17:9
  - FFc 4.5K 16:9

Codec

You can switch the codec for recording video.
Switch using [Project] – [Codec] in the menu.

Hint

- Can also be configured using [Project] – [Rec Format] – [Codec] in the full menu.

Note

- You cannot switch the codec during recording/playback.
- Restrictions may apply to the signal from the HDMI output connector, depending on the codec setting.

Video format

You can set the video format for recording video.
Switch using [Project] – [Video Format] in the menu.

Hint

- Can also be configured using [Project] – [Rec Format] – [Video Format] in the full menu.

Note

- You cannot switch the video format during recording or playback.
- Restrictions may apply to the signal from the HDMI output connector, depending on the video format setting.

Image quality

You can set the image quality for recording video.
Set using [Project] – [Rec Format] – [Quality] in the full menu.

Note

- You cannot switch the image quality during recording/playback.

TP1002215259

5-076-802-11(2) Copyright 2026 Sony Corporation

Interchangeable Lens Digital Camera
ILME-FX5/ILME-FX5B

Attaching/Removing a Lens

Turn off the camera before attaching or removing the lens.

1. **Remove the body cap (A) from the camera and the rear lens cap (B) from the rear of the lens.**

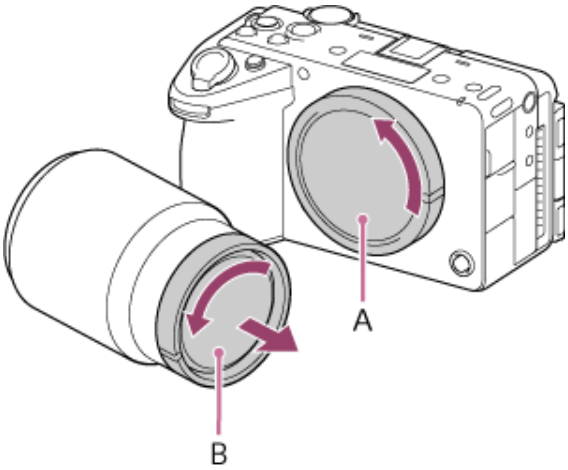

- It is recommended that you attach the front lens cap after you finish shooting.

2. **Mount the lens by aligning the two white marks (mounting indexes) on the lens and camera.**

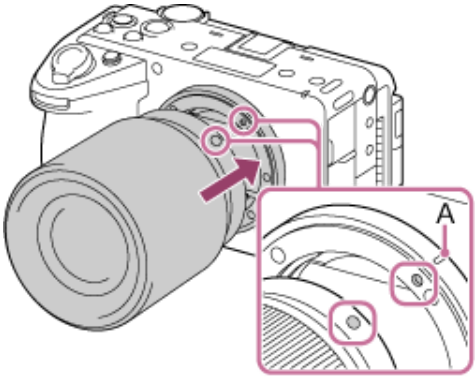

- Hold the camera with the lens mount facing down to prevent dust and debris from entering the camera.
- The lens mount has a bar-shaped protrusion (A) on its side. Use this as a guide when attaching a lens.

3. **While pushing the lens gently against the camera, turn the lens slowly in the direction of the arrow until it clicks into the locked position.**

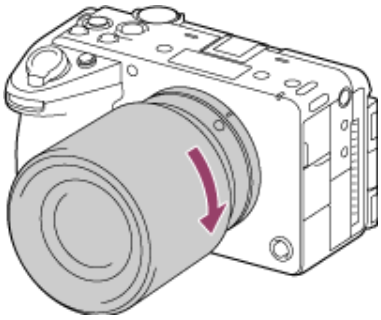

- Be sure to hold the lens straight when attaching it.

To remove the lens

While pressing the lens release button (A), turn the lens in the direction of the arrow until it stops.
After removing the lens, attach the body cap to the camera and the lens caps to the front and rear of the lens to prevent dust and debris from entering the camera and lens.

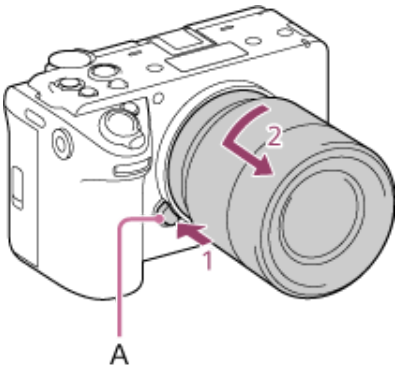

Note

- When attaching/removing the lens, work quickly in a dust-free location.
- Do not press the lens release button when attaching a lens.
- Do not apply excessive force to the lens.
- A mount adaptor (sold separately) is required to use an A-mount lens (sold separately). When using the mount adaptor, refer to the operating manual supplied with the mount adaptor. The unit supports the LA-EA3/LA-EA4/LA-EA5 mount adaptor (sold separately).
- To shoot full-frame images, use a full-frame size compatible lens.
- When using a lens with a tripod socket, attach a tripod to the tripod socket of the lens to help balance the weight of the lens.
- When carrying the camera with a lens attached, hold both the camera and the lens firmly.
- Do not hold the part of the lens that is extended for zoom or focus adjustment.

About iris adjustment if the lens has an Auto Iris switch

- Setting the Auto Iris switch of the lens to AUTO enables automatic iris adjustment, or manual adjustment from the unit.
- Setting the Auto Iris switch of the lens to MANUAL enables adjustment using the lens ring only. Iris operations from the unit are no longer accepted.

About focus adjustment if the lens has a focus switch

- Setting the focus switch of the lens to “AF/MF” or “AF” enables automatic focus adjustment, or manual adjustment from the Bluetooth remote control.
- Setting the focus switch of the lens to “MF” enables lens ring adjustment, or manual adjustment from the Bluetooth remote control.

Note

- When using an A-mount lens, manual adjustment from the Bluetooth remote control may not be supported.

- Setting the focus switch of the lens to “Full MF” enables adjustment using the lens ring only. Focus operations from the unit are no longer accepted.

About anamorphic lenses

For details about how to display de-squeezed HDMI output video and how to display de-squeezed video in the viewfinder of the unit when shooting with an anamorphic lens, see “Configuring De-Squeeze Display.”

TP1002274777

5-076-802-11(2) Copyright 2026 Sony Corporation

Interchangeable Lens Digital Camera
ILME-FX5/ILME-FX5B

Attaching the XLR Handle Unit (ILME-FX5 only)

When the XLR handle unit is attached to the unit, you can use the functions of the XLR adaptor.

Note

- The XLR-H1 XLR handle unit (sold separately) cannot be attached to the unit.

1. **Remove the shoe cap (A) and attach the Multi Interface foot (B) of the XLR handle unit to the Multi Interface Shoe.**

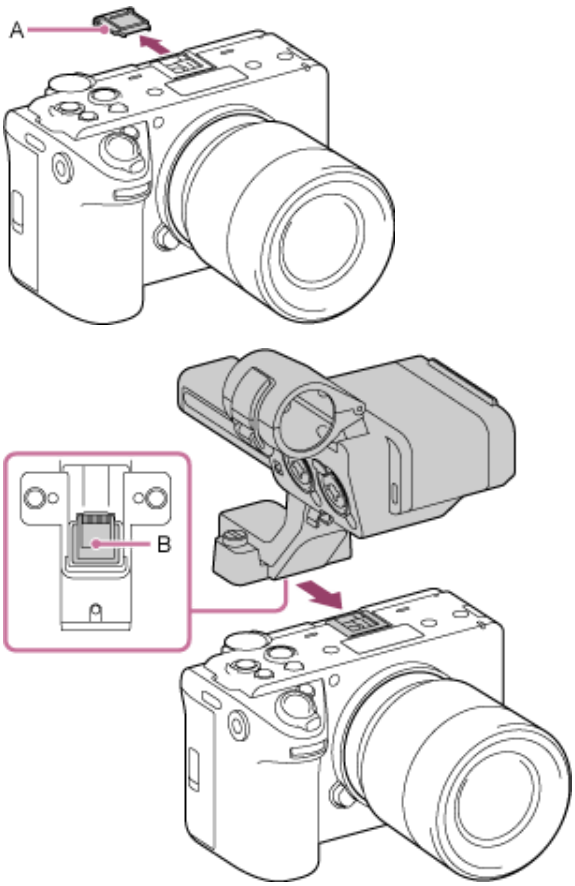

2. **Firmly tighten the two screws using a coin or other object.**

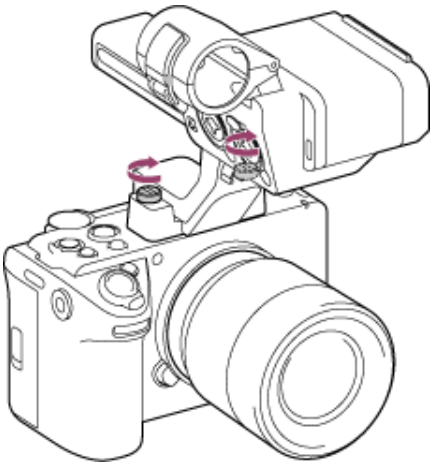

Note

- Turn off the camera before attaching or removing the handle.
- When attaching the XLR handle unit, firmly tighten the two handle attachment screws. Using the handle without fastening the handle attachment screws may damage the Multi Interface Shoe contacts or cause the camera to fall off.

Attaching the accessory shoe

1. **Remove the four screws from the XLR handle unit.**

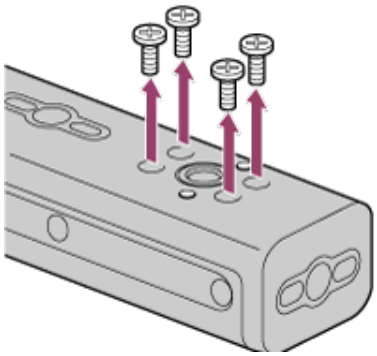

2. **Lift the front edge of the accessory shoe plate (A), and pull the plate in the opposite direction to the arrow engraved on the plate.**

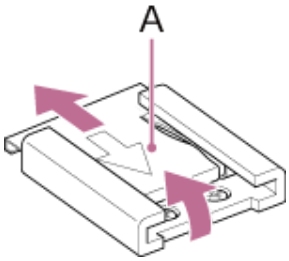

3. **Position the accessory shoe (B) on the accessory shoe mount, aligning the protrusions on the shoe with the corresponding points on the mount, and tighten the four screws.**

   - Use the screws supplied with the accessory shoe kit.

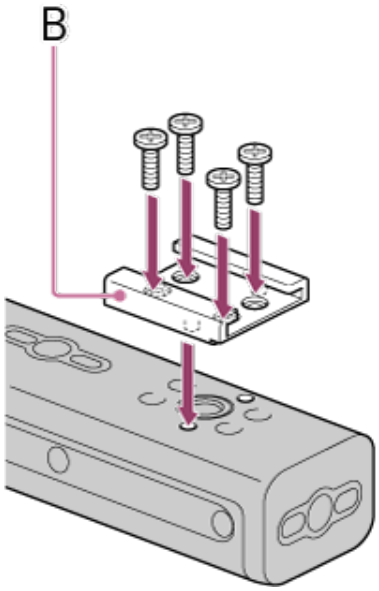

4. **Insert the accessory shoe plate (A) in the direction of the arrow so that the U-shaped portion fits onto the end of the accessory shoe.**

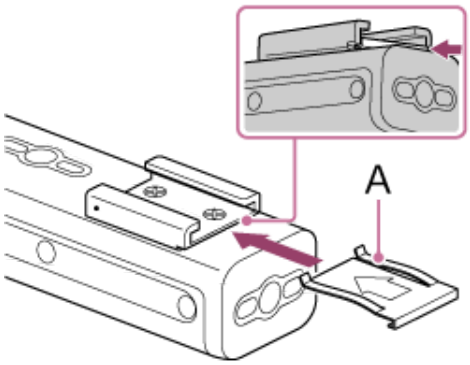

Note

- Forcing it into place in the wrong orientation may cause damage.

Hint

- To remove the accessory shoe, remove the accessory shoe plate as described in step 2, unscrew the four screws, and remove the accessory shoe.

TP1002274778

5-076-802-11(2) Copyright 2026 Sony Corporation

Interchangeable Lens Digital Camera
ILME-FX5/ILME-FX5B

Attaching a Viewfinder (sold separately)

You can attach a viewfinder (sold separately).

1. **Remove the connector protective cap (A) and VF terminal protect cap (B).**

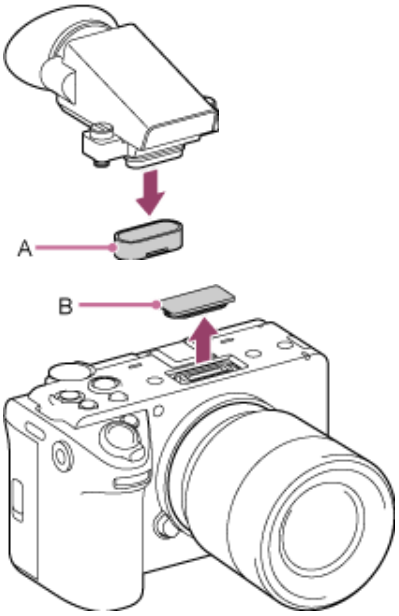

2. **Insert the viewfinder into the VF connector.**

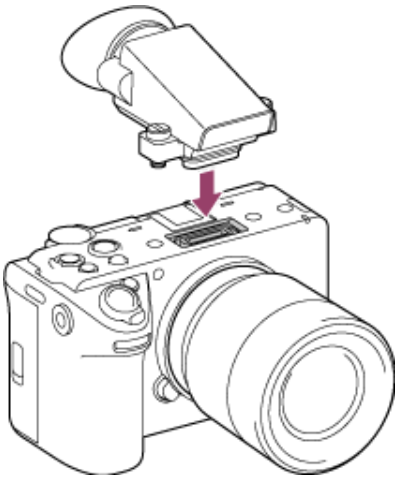

3. **Firmly tighten the two screws using a coin or other object.**

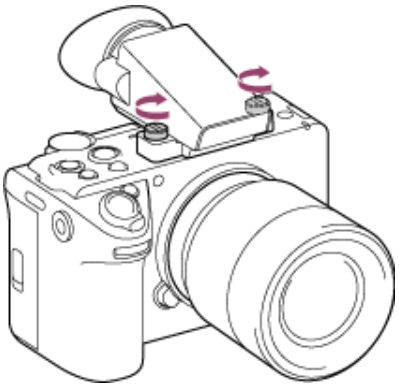

Hint

- The VF terminal protect cap supplied with the unit can be stored in a storage slot (C) of the viewfinder.

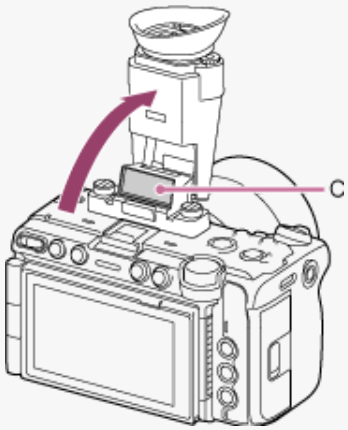

- When the viewfinder is not attached, attach the VF terminal protect cap onto the unit.

TP1002295526

5-076-802-11(2) Copyright 2026 Sony Corporation

Attaching a Microphone (sold separately)

You can attach a microphone (sold separately).

1. **Place the microphone (A) in the microphone holder (B).**

Note

- Before connecting/disconnecting a microphone, be sure to set the INPUT1 (LINE/MIC/MIC+48V) switch to a position other than “MIC+48V.” Plugging/unplugging a cable while the switch is set to “MIC+48V” may cause a loud noise or a malfunction of the microphone.

2. **Connect the microphone cable to the INPUT1 or INPUT2 connector.**

3. **Set the INPUT1/INPUT2 (LINE/MIC/MIC+48V) switches (C/D) according to the type of the microphone.**

MIC: Dynamic microphone, battery-operated microphone
MIC+48V: +48 V phantom power microphone

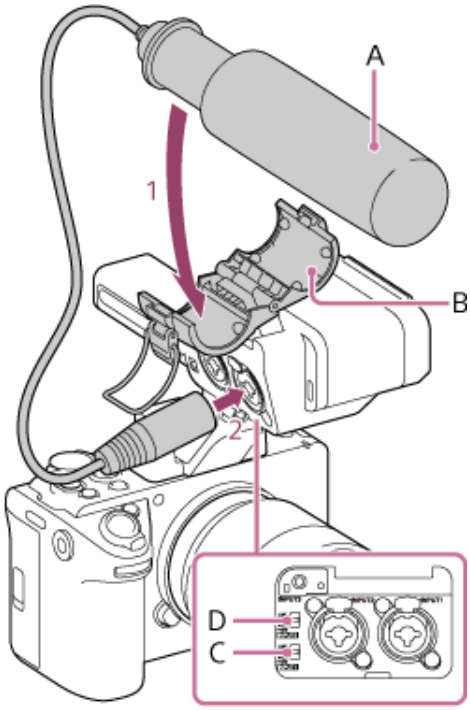

4. **Place the microphone cable into the cable holder (E).**

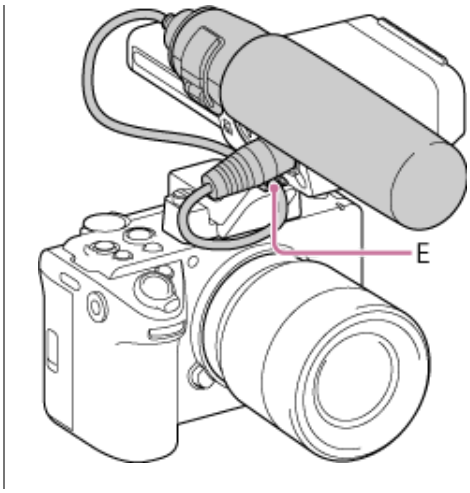

Hint

- If you cannot attach the microphone securely, use the spacer supplied with the microphone.
- Depending on the type of lens attached, the tip of the microphone may be visible in the image. Adjust the position of the microphone.

Related Topic

- Setting the Audio to Record using the XLR Handle Unit (ILME-FX5 only)
- Selecting Audio Input Devices on the XLR Handle Unit (ILME-FX5 only)
- Adjusting the Audio Recording Level using the XLR Handle Unit (ILME-FX5 only)

TP1002215260

5-076-802-11(2) Copyright 2026 Sony Corporation

Adjusting the Angle of the LCD Monitor

You can adjust the angle of the LCD monitor for comfortable viewing when shooting in any position.

- When holding the camera in a high or low position, pull the LCD monitor forward and adjust the angle.

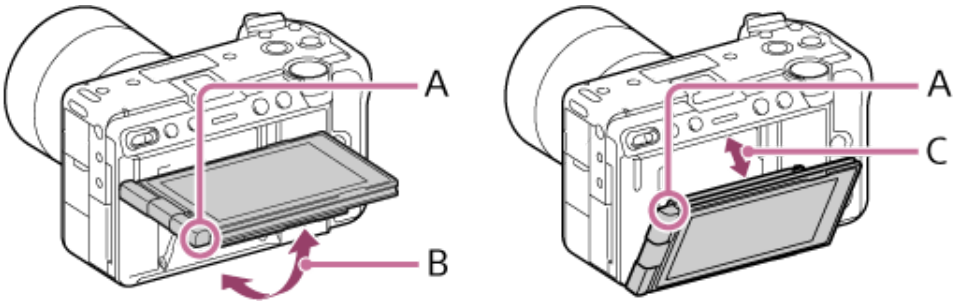

A: Finger pull position
B: Approx. 98 degrees (relative to rear side of camera)
C: Approx. 40 degrees (relative to rear side of camera)

- When the LCD monitor is opened horizontally and the lens is pointing towards you for a selfie, the image on the LCD monitor will be displayed horizontally flipped. Turning the LCD monitor toward the back will cancel the flipped display.

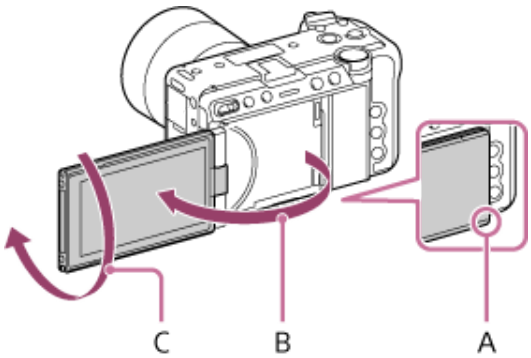

A: Finger pull position
B: Approx. 180 degrees
C: Approx. 270 degrees

- If you want to switch the screen display orientation for a selfie while the LCD monitor is pulled out from the rear of the camera, turn the panel all the way in direction (A). To cancel the screen orientation for selfie shooting, turn the panel completely in direction (B). (When [LCD Monitor H/V Flip] is set to [Auto])

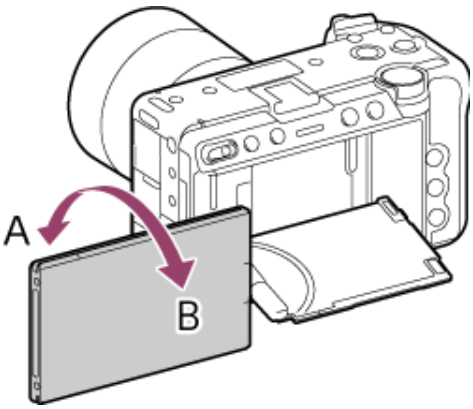

- In the default settings, the image inversion display automatically switches according to the direction the LCD monitor is facing when opened. You can also set a fixed display method using [Monitoring] – [LCD Monitor Setting] – [LCD Monitor H/V Flip] in

the full menu.

Note

- The angle of the LCD monitor may be difficult to adjust when the unit is attached to a tripod. In that case, first loosen the tripod screw and then adjust the angle of the LCD monitor.
- Do not use excessive force when opening, closing, or rotating the LCD monitor. Doing so will cause a malfunction.

TP1002215264

5-076-802-11(2) Copyright 2026 Sony Corporation

Interchangeable Lens Digital Camera
ILME-FX5/ILME-FX5B

Adjusting the Brightness of the LCD Monitor

Adjust using [Monitoring] – [LCD Monitor Setting] – [LCD Monitor Brightness] in the full menu. Adjusting the brightness does not affect the recorded image.

Hint

- You can also make adjustments using an assignable button assigned with [LCD/VF Adjust].

TP1002215265

5-076-802-11(2) Copyright 2026 Sony Corporation

Interchangeable Lens Digital Camera
ILME-FX5/ILME-FX5B

Magnifying the LCD Monitor Screen Display

Set [Maintenance] – [Accessibility] – [Enlarge Screen] – [Setting] to [Enable] in the full menu and press an assignable button assigned with [Enlarge Screen Button] to magnify the screen display. The magnification increases each time the button is pressed until finally the magnification is canceled.
To move the position to be magnified, touch a position on the LCD monitor or use the multi selector. Operate the menu using the multi-function dial.

Hint

- When [Accessibility] – [Enlarge Screen] – [Setting] is set to [Disable], the function of the assignable button assigned with [Enlarge Screen] returns to its factory default assignment.

Note

- You cannot change the screen magnification factor by touch operation.

Related Topic

- Magnifying the Screen Display

TP1002215266

5-076-802-11(2) Copyright 2026 Sony Corporation

Interchangeable Lens Digital Camera
ILME-FX5/ILME-FX5B

Adjusting the Angle of the Viewfinder (sold separately)

When looking through the viewfinder, move your eye so that it is close to the viewfinder.
You can adjust the angle of the viewfinder to suit your shooting style.

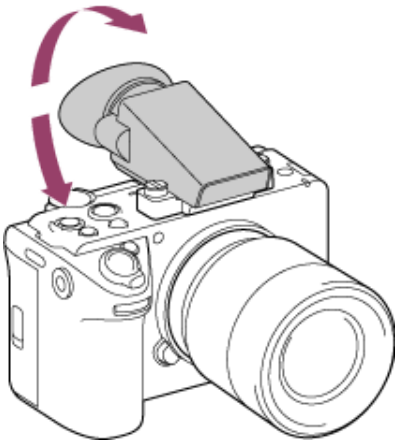

If the viewfinder screen display is blurry, adjust the diopter adjustment dial (A) on the side of the viewfinder. Turn the dial until the image is clear.

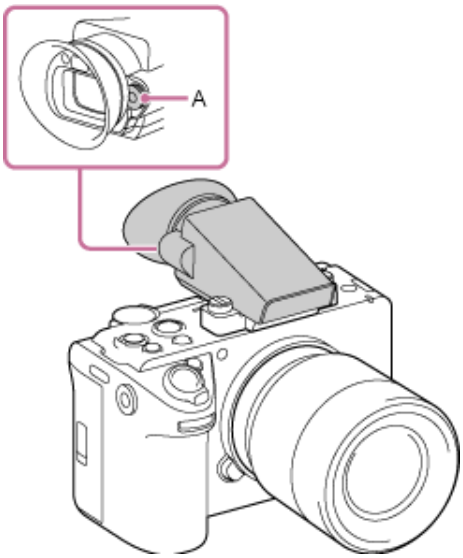

TP1002215267

5-076-802-11(2) Copyright 2026 Sony Corporation

Adjusting the Brightness of the Viewfinder (sold separately)

Adjust using [Monitoring] – [VF Setting] – [VF Brightness] in the full menu. Adjusting the brightness does not affect the recorded image.

Hint

- You can also make adjustments using an assignable button assigned with [LCD/VF Adjust].

TP1002215268

5-076-802-11(2) Copyright 2026 Sony Corporation

Interchangeable Lens Digital Camera
ILME-FX5/ILME-FX5B

Switching Between the LCD Monitor/Viewfinder Display

The viewfinder automatically turns on when the eyepiece sensor detects you looking into the viewfinder.
When the image is displayed in the viewfinder, the LCD monitor image is turned off (images are not displayed in the LCD monitor and viewfinder simultaneously).
If the eyepiece sensor is activated incorrectly due to external factors, such as your posture when holding the camera, the viewfinder may turn on and the LCD monitor may turn off.
If this occurs, you can temporarily turn the viewfinder and LCD monitor on/off by pressing the VF/LCD toggle button on the viewfinder or an assignable button assigned with [VF/LCD].

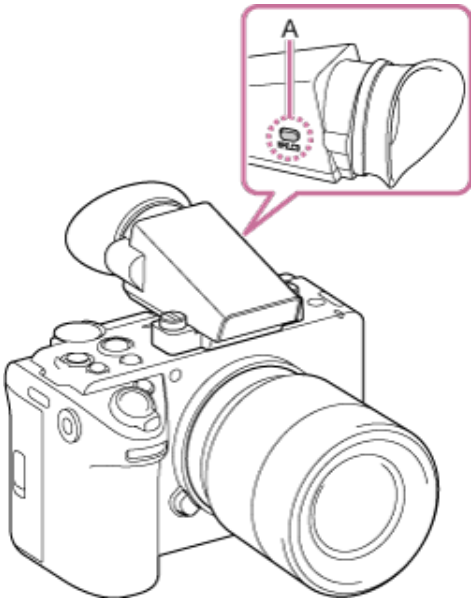

A: VF/LCD toggle button

You can set the method for switching between the viewfinder and LCD monitor display using [Monitoring] – [VF Setting] – [LCD Monitor/VF Select] in the full menu.

[LCD Priority Auto]:

Automatically switches to the viewfinder screen when you look into the viewfinder.
The eyepiece sensor may be disabled, preventing switching to the viewfinder screen depending on the open/closed status or angle of the LCD monitor. However, the eyepiece sensor is always enabled when the viewfinder is raised, and the image automatically switches to the viewfinder screen when you look into the viewfinder.

[VF Priority Auto]:

Automatically switches to the viewfinder screen when you look into the viewfinder.
The eyepiece sensor is always enabled for switching to the viewfinder screen, regardless of the open/closed status or angle of the LCD monitor or status of the viewfinder.

[LCD Monitor]:

Turns the viewfinder off, and the image is always displayed on the LCD monitor.

[VF]:

Turns the LCD monitor off, and the image is always displayed in the viewfinder.

TP1002215269

5-076-802-11(2) Copyright 2026 Sony Corporation

Memory Cards

The unit records audio and video on CFexpress Type A memory cards (available separately) or SDXC memory cards (available separately) inserted in the card slots. The memory cards are also used for proxy recording and storing/loading settings, and when upgrading (software update).

CFexpress Type A memory cards

For details about CFexpress Type A memory cards* supported by the unit, see the following topic.

Recommended Memory Cards

For details about operations with media from other manufacturers, refer to the operating instructions for the media or consult the manufacturer's information.

* Referred to as "CFexpress cards" in this Help Guide.

SDXC memory cards

For details about SDXC memory cards* supported by the unit, see the following topic.

Recommended Memory Cards

* Referred to as "SD cards" in this Help Guide.

TP1002215270

5-076-802-11(2) Copyright 2026 Sony Corporation

Recommended Memory Cards

The guaranteed operating conditions will vary depending on the [Rec Format] and recording settings.

MP4 format

Normal recording

✓: Operation guaranteed
×: Operation not guaranteed

Recording format			[Quality]	SDXC							CFexpress Type A	
[Project Frame Rate]	[Codec]	Resolution		Class 10	U1	U3	VSC V10	VSC V30	VSC V60	VSC V90	VPG200	VPG400
119.88 Hz	XAVC HS Long 422	3840×2160P	[High]	×	×	×	×	×	✓	✓	✓	✓
			[Mid]	×	×	×	×	×	✓	✓	✓	✓
			[Low]	×	×	×	×	×	✓	✓	✓	✓
	XAVC HS Long 420	3840×2160P	[High]	×	×	×	×	×	✓	✓	✓	✓
			[Mid]	×	×	×	×	×	✓	✓	✓	✓
			[Low]	×	×	×	×	×	✓	✓	✓	✓
	XAVC S Long 422	3840×2160P	[High]	×	×	×	×	×	✓	✓	✓	✓
			[Mid]	×	×	×	×	×	✓	✓	✓	✓
			[Low]	×	×	×	×	×	✓	✓	✓	✓
	XAVC S Long 420	3840×2160P	[High]	×	×	×	×	×	✓	✓	✓	✓
			[Mid]	×	×	×	×	×	✓	✓	✓	✓
			[Low]	×	×	×	×	×	✓	✓	✓	✓
		1920×1080P	[High]	×	×	✓	×	✓	✓	✓	✓	✓
			[Mid]	✓	✓	✓	✓	✓	✓	✓	✓	✓
			[Low]	✓	✓	✓	✓	✓	✓	✓	✓	✓

Recording format			[Quality]	SDXC							CFexpress Type A	
[Project Frame Rate]	[Codec]	Resolution		Class 10	U1	U3	VSC V10	VSC V30	VSC V60	VSC V90	VPG200	VPG400
100 Hz	XAVC HS Long 422	3840×2160P	[High]	×	×	×	×	×	✓	✓	✓	✓
			[Mid]	×	×	×	×	×	✓	✓	✓	✓
			[Low]	×	×	×	×	×	✓	✓	✓	✓
	XAVC HS Long 420	3840×2160P	[High]	×	×	×	×	×	✓	✓	✓	✓
			[Mid]	×	×	×	×	×	✓	✓	✓	✓
			[Low]	×	×	×	×	×	✓	✓	✓	✓
	XAVC S Long 422	3840×2160P	[High]	×	×	×	×	×	✓	✓	✓	✓
			[Mid]	×	×	×	×	×	✓	✓	✓	✓
			[Low]	×	×	×	×	×	✓	✓	✓	✓
	XAVC S Long 420	3840×2160P	[High]	×	×	×	×	×	✓	✓	✓	✓
			[Mid]	×	×	×	×	×	✓	✓	✓	✓
			[Low]	×	×	×	×	×	✓	✓	✓	✓
		1920×1080P	[High]	×	×	✓	×	✓	✓	✓	✓	✓
			[Mid]	✓	✓	✓	✓	✓	✓	✓	✓	✓
			[Low]	✓	✓	✓	✓	✓	✓	✓	✓	✓

Recording format			[Quality]	SDXC							CFexpress Type A	
[Project Frame Rate]	[Codec]	Resolution		Class 10	U1	U3	VSC V10	VSC V30	VSC V60	VSC V90	VPG200	VPG400
59.94 Hz	XAVC HS Long 422	3840×2160P	[High]	×	×	✓	×	✓	✓	✓	✓	✓
			[Mid]	×	×	✓	×	✓	✓	✓	✓	✓
			[Low]	×	×	✓	×	✓	✓	✓	✓	✓
	XAVC HS Long 420	3840×2160P	[High]	×	×	✓	×	✓	✓	✓	✓	✓
			[Mid]	×	×	✓	×	✓	✓	✓	✓	✓
			[Low]	✓	✓	✓	✓	✓	✓	✓	✓	✓
	XAVC S Long 422	3840×2160P	[High]	×	×	✓	×	✓	✓	✓	✓	✓
			[Mid]	×	×	✓	×	✓	✓	✓	✓	✓
			[Low]	×	×	✓	×	✓	✓	✓	✓	✓
		1920×1080P	[High]	✓	✓	✓	✓	✓	✓	✓	✓	✓
			[Mid]	✓	✓	✓	✓	✓	✓	✓	✓	✓
			[Low]	✓	✓	✓	✓	✓	✓	✓	✓	✓
	XAVC S Long 420	3840×2160P	[High]	×	×	✓	×	✓	✓	✓	✓	✓
			[Mid]	×	×	✓	×	✓	✓	✓	✓	✓
			[Low]	×	×	✓	×	✓	✓	✓	✓	✓
		1920×1080P	[High]	✓	✓	✓	✓	✓	✓	✓	✓	✓
			[Mid]	✓	✓	✓	✓	✓	✓	✓	✓	✓
			[Low]	✓	✓	✓	✓	✓	✓	✓	✓	✓
	XAVC S Intra 422	4096×2160P	[High]	×	×	×	×	×	×	✓	✓	✓
			[Mid]	×	×	×	×	×	×	✓	✓	✓
			[Low]	×	×	×	×	×	×	✓	✓	✓
		3840×2160P*1	[High]	×	×	×	×	×	×	✓	✓	✓
			[Mid]	×	×	×	×	×	×	✓	✓	✓
			[Low]	×	×	×	×	×	×	✓	✓	✓
		1920×1080P*2	[High]	×	×	×	×	×	×	✓	✓	✓
			[Mid]	×	×	×	×	×	×	✓	✓	✓
			[Low]	×	×	×	×	×	×	✓	✓	✓

Recording format			[Quality]	SDXC							CFexpress Type A	
[Project Frame Rate]	[Codec]	Resolution		Class 10	U1	U3	VSC V10	VSC V30	VSC V60	VSC V90	VPG200	VPG400
50 Hz	XAVC HS Long 422	3840×2160P	[High]	×	×	✓	×	✓	✓	✓	✓	✓
			[Mid]	×	×	✓	×	✓	✓	✓	✓	✓
			[Low]	×	×	✓	×	✓	✓	✓	✓	✓
	XAVC HS Long 420	3840×2160P	[High]	×	×	✓	×	✓	✓	✓	✓	✓
			[Mid]	×	×	✓	×	✓	✓	✓	✓	✓
			[Low]	✓	✓	✓	✓	✓	✓	✓	✓	✓
	XAVC S Long 422	3840×2160P	[High]	×	×	✓	×	✓	✓	✓	✓	✓
			[Mid]	×	×	✓	×	✓	✓	✓	✓	✓
			[Low]	×	×	✓	×	✓	✓	✓	✓	✓
		1920×1080P	[High]	✓	✓	✓	✓	✓	✓	✓	✓	✓
			[Mid]	✓	✓	✓	✓	✓	✓	✓	✓	✓
			[Low]	✓	✓	✓	✓	✓	✓	✓	✓	✓
	XAVC S Long 420	3840×2160P	[High]	×	×	✓	×	✓	✓	✓	✓	✓
			[Mid]	×	×	✓	×	✓	✓	✓	✓	✓
			[Low]	×	×	✓	×	✓	✓	✓	✓	✓
		1920×1080P	[High]	✓	✓	✓	✓	✓	✓	✓	✓	✓
			[Mid]	✓	✓	✓	✓	✓	✓	✓	✓	✓
			[Low]	✓	✓	✓	✓	✓	✓	✓	✓	✓
	XAVC S Intra 422	4096×2160P	[High]	×	×	×	×	×	×	✓	✓	✓
			[Mid]	×	×	×	×	×	×	✓	✓	✓
			[Low]	×	×	×	×	×	×	✓	✓	✓
		3840×2160P*1	[High]	×	×	×	×	×	×	✓	✓	✓
			[Mid]	×	×	×	×	×	×	✓	✓	✓
			[Low]	×	×	×	×	×	×	✓	✓	✓
		1920×1080P*2	[High]	×	×	×	×	×	×	✓	✓	✓
			[Mid]	×	×	×	×	×	×	✓	✓	✓
			[Low]	×	×	×	×	×	×	✓	✓	✓

Recording format			[Quality]	SDXC							CFexpress Type A	
[Project Frame Rate]	[Codec]	Resolution		Class 10	U1	U3	VSC V10	VSC V30	VSC V60	VSC V90	VPG200	VPG400
29.97 Hz	XAVC S Long 422	3840×2160P	[High]	×	×	✓	×	✓	✓	✓	✓	✓
			[Mid]	×	×	✓	×	✓	✓	✓	✓	✓
			[Low]	×	×	✓	×	✓	✓	✓	✓	✓
		1920×1080P	[High]	✓	✓	✓	✓	✓	✓	✓	✓	✓
			[Mid]	✓	✓	✓	✓	✓	✓	✓	✓	✓
			[Low]	✓	✓	✓	✓	✓	✓	✓	✓	✓
	XAVC S Long 420	3840×2160P	[High]	×	×	✓	×	✓	✓	✓	✓	✓
			[Mid]	✓	✓	✓	✓	✓	✓	✓	✓	✓
			[Low]	✓	✓	✓	✓	✓	✓	✓	✓	✓
		1920×1080P	[High]	✓	✓	✓	✓	✓	✓	✓	✓	✓
			[Mid]	✓	✓	✓	✓	✓	✓	✓	✓	✓
			[Low]	✓	✓	✓	✓	✓	✓	✓	✓	✓
	XAVC S Intra 422	4096×2160P	[High]	×	×	×	×	×	×	✓	✓	✓
			[Mid]	×	×	×	×	×	×	✓	✓	✓
			[Low]	×	×	×	×	×	×	✓	✓	✓
		3840×2160P*1	[High]	×	×	×	×	×	×	✓	✓	✓
			[Mid]	×	×	×	×	×	×	✓	✓	✓
			[Low]	×	×	×	×	×	×	✓	✓	✓
		1920×1080P*2	[High]	×	×	×	×	×	×	✓	✓	✓
			[Mid]	×	×	×	×	×	×	✓	✓	✓
			[Low]	×	×	×	×	×	×	✓	✓	✓

Recording format			[Quality]	SDXC							CFexpress Type A	
[Project Frame Rate]	[Codec]	Resolution		Class 10	U1	U3	VSC V10	VSC V30	VSC V60	VSC V90	VPG200	VPG400
25 Hz	XAVC S Long 422	3840×2160P	[High]	×	×	✓	×	✓	✓	✓	✓	✓
			[Mid]	×	×	✓	×	✓	✓	✓	✓	✓
			[Low]	×	×	✓	×	✓	✓	✓	✓	✓
		1920×1080P	[High]	✓	✓	✓	✓	✓	✓	✓	✓	✓
			[Mid]	✓	✓	✓	✓	✓	✓	✓	✓	✓
			[Low]	✓	✓	✓	✓	✓	✓	✓	✓	✓
	XAVC S Long 420	3840×2160P	[High]	×	×	✓	×	✓	✓	✓	✓	✓
			[Mid]	✓	✓	✓	✓	✓	✓	✓	✓	✓
			[Low]	✓	✓	✓	✓	✓	✓	✓	✓	✓
		1920×1080P	[High]	✓	✓	✓	✓	✓	✓	✓	✓	✓
			[Mid]	✓	✓	✓	✓	✓	✓	✓	✓	✓
			[Low]	✓	✓	✓	✓	✓	✓	✓	✓	✓
	XAVC S Intra 422	4096×2160P	[High]	×	×	×	×	×	×	✓	✓	✓
			[Mid]	×	×	×	×	×	×	✓	✓	✓
			[Low]	×	×	×	×	×	×	✓	✓	✓
		3840×2160P*1	[High]	×	×	×	×	×	×	✓	✓	✓
			[Mid]	×	×	×	×	×	×	✓	✓	✓
			[Low]	×	×	×	×	×	×	✓	✓	✓
		1920×1080P*2	[High]	×	×	×	×	×	×	✓	✓	✓
			[Mid]	×	×	×	×	×	×	✓	✓	✓
			[Low]	×	×	×	×	×	×	✓	✓	✓

Recording format			[Quality]	SDXC							CFexpress Type A	
[Project Frame Rate]	[Codec]	Resolution		Class 10	U1	U3	VSC V10	VSC V30	VSC V60	VSC V90	VPG200	VPG400
23.98 Hz	XAVC HS Long 422	3840×2160P	[High]	×	×	✓	×	✓	✓	✓	✓	✓
			[Mid]	✓	✓	✓	✓	✓	✓	✓	✓	✓
			[Low]	✓	✓	✓	✓	✓	✓	✓	✓	✓
	XAVC HS Long 420	3840×2160P	[High]	×	×	✓	×	✓	✓	✓	✓	✓
			[Mid]	✓	✓	✓	✓	✓	✓	✓	✓	✓
			[Low]	✓	✓	✓	✓	✓	✓	✓	✓	✓
	XAVC S Long 422	3840×2160P	[High]	×	×	✓	×	✓	✓	✓	✓	✓
			[Mid]	×	×	✓	×	✓	✓	✓	✓	✓
			[Low]	×	×	✓	×	✓	✓	✓	✓	✓
		1920×1080P	[High]	✓	✓	✓	✓	✓	✓	✓	✓	✓
			[Mid]	✓	✓	✓	✓	✓	✓	✓	✓	✓
			[Low]	✓	✓	✓	✓	✓	✓	✓	✓	✓
	XAVC S Long 420	3840×2160P	[High]	×	×	✓	×	✓	✓	✓	✓	✓
			[Mid]	✓	✓	✓	✓	✓	✓	✓	✓	✓
			[Low]	✓	✓	✓	✓	✓	✓	✓	✓	✓
		1920×1080P	[High]	✓	✓	✓	✓	✓	✓	✓	✓	✓
			[Mid]	✓	✓	✓	✓	✓	✓	✓	✓	✓
			[Low]	✓	✓	✓	✓	✓	✓	✓	✓	✓
	XAVC S Intra 422	4096×2160P	[High]	×	×	×	×	×	×	✓	✓	✓
			[Mid]	×	×	×	×	×	×	✓	✓	✓
			[Low]	×	×	×	×	×	×	✓	✓	✓
		3840×2160P*1	[High]	×	×	×	×	×	×	✓	✓	✓
			[Mid]	×	×	×	×	×	×	✓	✓	✓
			[Low]	×	×	×	×	×	×	✓	✓	✓
		1920×1080P*2	[High]	×	×	×	×	×	×	✓	✓	✓
			[Mid]	×	×	×	×	×	×	✓	✓	✓
			[Low]	×	×	×	×	×	×	✓	✓	✓
24 Hz	XAVC S Intra 422	4096×2160P	[High]	×	×	×	×	×	×	✓	✓	✓
			[Mid]	×	×	×	×	×	×	✓	✓	✓
			[Low]	×	×	×	×	×	×	✓	✓	✓

*1 Class 300
*2 Class 100

FPS operation

✓: Operation guaranteed
×: Operation not guaranteed

Recording format			S&Q shooting frame rate	[Quality]	SDXC							CFexpress Type A	
[Project Frame Rate]	[Codec]	Resolution			Class 10	U1	U3	VSC V10	VSC V30	VSC V60	VSC V90	VPG200	VPG400
59.94 Hz	XAVC HS Long 422	3840×2160P	1–60	[High]	×	×	×	×	×	✓	✓	✓	✓
				[Mid], [Low]	×	×	×	×	×	✓	✓	✓	✓
			66, 72, 75, 88, 90, 96, 100, 110, 120	[High]	×	×	×	×	×	×	✓	✓	✓
				[Mid], [Low]	×	×	×	×	×	✓	✓	✓	✓
	XAVC HS Long 420	3840×2160P	1–60	[High]	×	×	×	×	×	✓	✓	✓	✓
				[Mid]	×	×	×	×	×	✓	✓	✓	✓
				[Low]	×	×	×	×	×	✓	✓	✓	✓
			66, 72, 75, 88, 90, 96, 100, 110, 120	[High]	×	×	×	×	×	✓	✓	✓	✓
				[Mid]	×	×	×	×	×	✓	✓	✓	✓
				[Low]	×	×	×	×	×	✓	✓	✓	✓
	XAVC S Long 422	3840×2160P	1–60	[High], [Mid], [Low]	×	×	×	×	×	✓	✓	✓	✓
			66, 72, 75, 88, 90, 96, 100, 110, 120	[High], [Mid], [Low]	×	×	×	×	×	×	✓	✓	✓
		1920×1080P	1–60	[High], [Mid], [Low]	×	×	✓	×	✓	✓	✓	✓	✓
			66, 72, 75, 88, 90, 96, 100, 110, 120	[High], [Mid], [Low]	×	×	✓	×	✓	✓	✓	✓	✓
			150, 180, 200, 240	[High], [Mid], [Low]	×	×	×	×	×	✓	✓	✓	✓

Recording format			S&Q shooting frame rate	[Quality]	SDXC							CFexpress Type A	
[Project Frame Rate]	[Codec]	Resolution			Class 10	U1	U3	VSC V10	VSC V30	VSC V60	VSC V90	VPG200	VPG400
	XAVC S Long 420	3840×2160P	1–60	[High], [Mid], [Low]	×	×	×	×	×	✓	✓	✓	✓
			66, 72, 75, 88, 90, 96, 100, 110, 120	[High], [Mid], [Low]	×	×	×	×	×	✓	✓	✓	✓
		1920×1080P	1–60	[High]	×	×	✓	×	✓	✓	✓	✓	✓
				[Mid], [Low]	×	×	✓	×	✓	✓	✓	✓	✓
			66, 72, 75, 88, 90, 96, 100, 110, 120	[High]	×	×	✓	×	✓	✓	✓	✓	✓
				[Mid], [Low]	×	×	✓	×	✓	✓	✓	✓	✓
			150, 180, 200, 240	[High]	×	×	×	×	×	✓	✓	✓	✓
				[Mid], [Low]	×	×	✓	×	✓	✓	✓	✓	✓
	XAVC S Intra 422	4096×2160P	1–60	[High], [Mid], [Low]	×	×	×	×	×	×	✓	✓	✓
			66, 72, 75, 88, 90, 96, 100, 110, 120	[High], [Mid], [Low]	×	×	×	×	×	×	×	✓	✓
		3840×2160P*1	1–60	[High], [Mid], [Low]	×	×	×	×	×	×	✓	✓	✓
			66, 72, 75, 88, 90, 96, 100, 110, 120	[High], [Mid], [Low]	×	×	×	×	×	×	×	✓	✓
		1920×1080P*2	1–60	[High], [Mid], [Low]	×	×	×	×	×	×	✓	✓	✓
			66, 72, 75, 88, 90, 96, 100, 110, 120	[High], [Mid], [Low]	×	×	×	×	×	×	✓	✓	✓
			150, 180, 200, 240	[High], [Mid], [Low]	×	×	×	×	×	×	×	✓	✓

Recording format			S&Q shooting frame rate	[Quality]	SDXC							CFexpress Type A	
[Project Frame Rate]	[Codec]	Resolution			Class 10	U1	U3	VSC V10	VSC V30	VSC V60	VSC V90	VPG200	VPG400
50 Hz	XAVC HS Long 422	3840×2160P	1–60	[High]	×	×	×	×	×	✓	✓	✓	✓
				[Mid], [Low]	×	×	×	×	×	✓	✓	✓	✓
			66, 72, 75, 88, 90, 96, 100, 110, 120	[High]	×	×	×	×	×	×	✓	✓	✓
				[Mid], [Low]	×	×	×	×	×	✓	✓	✓	✓
	XAVC HS Long 420	3840×2160P	1–60	[High]	×	×	×	×	×	✓	✓	✓	✓
				[Mid]	×	×	×	×	×	✓	✓	✓	✓
				[Low]	×	×	×	×	×	✓	✓	✓	✓
			66, 72, 75, 88, 90, 96, 100, 110, 120	[High]	×	×	×	×	×	✓	✓	✓	✓
				[Mid]	×	×	×	×	×	✓	✓	✓	✓
				[Low]	×	×	×	×	×	✓	✓	✓	✓
	XAVC S Long 422	3840×2160P	1–60	[High], [Mid], [Low]	×	×	×	×	×	✓	✓	✓	✓
			66, 72, 75, 88, 90, 96, 100, 110, 120	[High], [Mid], [Low]	×	×	×	×	×	×	✓	✓	✓
		1920×1080P	1–60	[High], [Mid], [Low]	×	×	✓	×	✓	✓	✓	✓	✓
			66, 72, 75, 88, 90, 96, 100, 110, 120	[High], [Mid], [Low]	×	×	✓	×	✓	✓	✓	✓	✓
			150, 180, 200, 240	[High], [Mid], [Low]	×	×	×	×	×	✓	✓	✓	✓

Recording format			S&Q shooting frame rate	[Quality]	SDXC							CFexpress Type A	
[Project Frame Rate]	[Codec]	Resolution			Class 10	U1	U3	VSC V10	VSC V30	VSC V60	VSC V90	VPG200	VPG400
	XAVC S Long 420	3840×2160P	1–60	[High], [Mid], [Low]	×	×	×	×	×	✓	✓	✓	✓
			66, 72, 75, 88, 90, 96, 100, 110, 120	[High], [Mid], [Low]	×	×	×	×	×	✓	✓	✓	✓
		1920×1080P	1–60	[High]	×	×	✓	×	✓	✓	✓	✓	✓
				[Mid], [Low]	×	×	✓	×	✓	✓	✓	✓	✓
			66, 72, 75, 88, 90, 96, 100, 110, 120	[High]	×	×	✓	×	✓	✓	✓	✓	✓
				[Mid], [Low]	×	×	✓	×	✓	✓	✓	✓	✓
			150, 180, 200, 240	[High]	×	×	×	×	×	✓	✓	✓	✓
				[Mid], [Low]	×	×	✓	×	✓	✓	✓	✓	✓
	XAVC S Intra 422	4096×2160P	1–60	[High], [Mid], [Low]	×	×	×	×	×	×	✓	✓	✓
			66, 72, 75, 88, 90, 96, 100, 110, 120	[High], [Mid], [Low]	×	×	×	×	×	×	×	✓	✓
		3840×2160P*1	1–60	[High], [Mid], [Low]	×	×	×	×	×	×	✓	✓	✓
			66, 72, 75, 88, 90, 96, 100, 110, 120	[High], [Mid], [Low]	×	×	×	×	×	×	×	✓	✓
		1920×1080P*2	1–60	[High], [Mid], [Low]	×	×	×	×	×	×	✓	✓	✓
			66, 72, 75, 88, 90, 96, 100, 110, 120	[High], [Mid], [Low]	×	×	×	×	×	×	✓	✓	✓
			150, 180, 200, 240	[High], [Mid], [Low]	×	×	×	×	×	×	×	✓	✓

Recording format			S&Q shooting frame rate	[Quality]	SDXC							CFexpress Type A	
[Project Frame Rate]	[Codec]	Resolution			Class 10	U1	U3	VSC V10	VSC V30	VSC V60	VSC V90	VPG200	VPG400
29.97 Hz	XAVC S Long 422	3840×2160P	1–60	[High], [Mid], [Low]	×	×	×	×	×	✓	✓	✓	✓
			66, 72, 75, 88, 90, 96, 100, 110, 120	[High], [Mid], [Low]	×	×	×	×	×	×	✓	✓	✓
		1920×1080P	1–60	[High], [Mid], [Low]	×	×	✓	×	✓	✓	✓	✓	✓
			66, 72, 75, 88, 90, 96, 100, 110, 120	[High], [Mid], [Low]	×	×	×	×	×	✓	✓	✓	✓
			150, 180, 200, 240	[High], [Mid], [Low]	×	×	×	×	×	×	✓	✓	✓
	XAVC S Long 420	3840×2160P	1–60	[High]	×	×	×	×	×	✓	✓	✓	✓
				[Mid], [Low]	×	×	×	×	×	✓	✓	✓	✓
			66, 72, 75, 88, 90, 96, 100, 110, 120	[High]	×	×	×	×	×	×	✓	✓	✓
				[Mid], [Low]	×	×	×	×	×	✓	✓	✓	✓
		1920×1080P	1–60	[High]	×	×	✓	×	✓	✓	✓	✓	✓
				[Mid], [Low]	×	×	✓	×	✓	✓	✓	✓	✓
			66, 72, 75, 88, 90, 96, 100, 110, 120	[High]	×	×	×	×	×	✓	✓	✓	✓
				[Mid], [Low]	×	×	✓	×	✓	✓	✓	✓	✓
			150, 180, 200, 240	[High]	×	×	×	×	×	×	✓	✓	✓
				[Mid], [Low]	×	×	×	×	×	✓	✓	✓	✓

Recording format			S&Q shooting frame rate	[Quality]	SDXC							CFexpress Type A	
[Project Frame Rate]	[Codec]	Resolution			Class 10	U1	U3	VSC V10	VSC V30	VSC V60	VSC V90	VPG200	VPG400
	XAVC S Intra 422	4096×2160P	1–30	[High], [Mid], [Low]	×	×	×	×	×	×	✓	✓	✓
			31–60	[High], [Mid], [Low]	×	×	×	×	×	×	×	✓	✓
			66, 72, 75, 88, 90, 96, 100, 110, 120	[High], [Mid], [Low]	×	×	×	×	×	×	×	✓	✓
		3840×2160P*1	1–30	[High], [Mid], [Low]	×	×	×	×	×	×	✓	✓	✓
			31–60	[High], [Mid], [Low]	×	×	×	×	×	×	×	✓	✓
			66, 72, 75, 88, 90, 96, 100, 110, 120	[High], [Mid], [Low]	×	×	×	×	×	×	×	✓	✓
		1920×1080P*2	1–60	[High], [Mid], [Low]	×	×	×	×	×	×	✓	✓	✓
			66, 72, 75, 88, 90, 96, 100, 110, 120	[High], [Mid], [Low]	×	×	×	×	×	×	✓	✓	✓
			150, 180, 200, 240	[High], [Mid], [Low]	×	×	×	×	×	×	×	✓	✓

Recording format			S&Q shooting frame rate	[Quality]	SDXC							CFexpress Type A	
[Project Frame Rate]	[Codec]	Resolution			Class 10	U1	U3	VSC V10	VSC V30	VSC V60	VSC V90	VPG200	VPG400
25 Hz	XAVC S Long 422	3840×2160P	1–60	[High], [Mid], [Low]	×	×	×	×	×	✓	✓	✓	✓
			66, 72, 75, 88, 90, 96, 100, 110, 120	[High], [Mid], [Low]	×	×	×	×	×	×	✓	✓	✓
		1920×1080P	1–60	[High], [Mid], [Low]	×	×	✓	×	✓	✓	✓	✓	✓
			66, 72, 75, 88, 90, 96, 100, 110, 120	[High], [Mid], [Low]	×	×	×	×	×	✓	✓	✓	✓
			150, 180, 200, 240	[High], [Mid], [Low]	×	×	×	×	×	×	✓	✓	✓
	XAVC S Long 420	3840×2160P	1–60	[High]	×	×	×	×	×	✓	✓	✓	✓
				[Mid], [Low]	×	×	×	×	×	✓	✓	✓	✓
			66, 72, 75, 88, 90, 96, 100, 110, 120	[High]	×	×	×	×	×	×	✓	✓	✓
				[Mid], [Low]	×	×	×	×	×	✓	✓	✓	✓
		1920×1080P	1–60	[High]	×	×	✓	×	✓	✓	✓	✓	✓
				[Mid], [Low]	×	×	✓	×	✓	✓	✓	✓	✓
			66, 72, 75, 88, 90, 96, 100, 110, 120	[High]	×	×	×	×	×	✓	✓	✓	✓
				[Mid], [Low]	×	×	✓	×	✓	✓	✓	✓	✓
			150, 180, 200, 240	[High]	×	×	×	×	×	×	✓	✓	✓
				[Mid], [Low]	×	×	×	×	×	✓	✓	✓	✓

Recording format			S&Q shooting frame rate	[Quality]	SDXC							CFexpress Type A	
[Project Frame Rate]	[Codec]	Resolution			Class 10	U1	U3	VSC V10	VSC V30	VSC V60	VSC V90	VPG200	VPG400
	XAVC S Intra 422	4096×2160P	1–30	[High], [Mid], [Low]	×	×	×	×	×	×	✓	✓	✓
			31–60	[High], [Mid], [Low]	×	×	×	×	×	×	×	✓	✓
			66, 72, 75, 88, 90, 96, 100, 110, 120	[High], [Mid], [Low]	×	×	×	×	×	×	×	✓	✓
		3840×2160P*1	1–30	[High], [Mid], [Low]	×	×	×	×	×	×	✓	✓	✓
			31–60	[High], [Mid], [Low]	×	×	×	×	×	×	×	✓	✓
			66, 72, 75, 88, 90, 96, 100, 110, 120	[High], [Mid], [Low]	×	×	×	×	×	×	×	✓	✓
		1920×1080P*2	1–60	[High], [Mid], [Low]	×	×	×	×	×	×	✓	✓	✓
			66, 72, 75, 88, 90, 96, 100, 110, 120	[High], [Mid], [Low]	×	×	×	×	×	×	✓	✓	✓
			150, 180, 200, 240	[High], [Mid], [Low]	×	×	×	×	×	×	×	✓	✓

Recording format			S&Q shooting frame rate	[Quality]	SDXC							CFexpress Type A	
[Project Frame Rate]	[Codec]	Resolution			Class 10	U1	U3	VSC V10	VSC V30	VSC V60	VSC V90	VPG200	VPG400
23.98 Hz	XAVC HS Long 422	3840×2160P	1–60	[High]	×	×	×	×	×	✓	✓	✓	✓
				[Mid], [Low]	×	×	×	×	×	✓	✓	✓	✓
			66, 72, 75, 88, 90, 96, 100, 110, 120	[High]	×	×	×	×	×	×	✓	✓	✓
				[Mid], [Low]	×	×	×	×	×	✓	✓	✓	✓
	XAVC HS Long 420	3840×2160P	1–60	[High]	×	×	×	×	×	✓	✓	✓	✓
				[Mid]	×	×	×	×	×	✓	✓	✓	✓
				[Low]	×	×	×	×	×	✓	✓	✓	✓
			66, 72, 75, 88, 90, 96, 100, 110, 120	[High]	×	×	×	×	×	×	✓	✓	✓
				[Mid]	×	×	×	×	×	✓	✓	✓	✓
				[Low]	×	×	×	×	×	✓	✓	✓	✓
	XAVC S Long 422	3840×2160P	1–60	[High], [Mid], [Low]	×	×	×	×	×	✓	✓	✓	✓
			66, 72, 75, 88, 90, 96, 100, 110, 120	[High], [Mid], [Low]	×	×	×	×	×	×	✓	✓	✓
		1920×1080P	1–60	[High], [Mid], [Low]	×	×	✓	×	✓	✓	✓	✓	✓
			66, 72, 75, 88, 90, 96, 100, 110, 120	[High], [Mid], [Low]	×	×	×	×	×	✓	✓	✓	✓
			150, 180, 200, 240	[High], [Mid], [Low]	×	×	×	×	×	×	✓	✓	✓

Recording format			S&Q shooting frame rate	[Quality]	SDXC							CFexpress Type A	
[Project Frame Rate]	[Codec]	Resolution			Class 10	U1	U3	VSC V10	VSC V30	VSC V60	VSC V90	VPG200	VPG400
	XAVC S Long 420	3840×2160P	1–60	[High]	×	×	×	×	×	✓	✓	✓	✓
				[Mid], [Low]	×	×	×	×	×	✓	✓	✓	✓
			66, 72, 75, 88, 90, 96, 100, 110, 120	[High]	×	×	×	×	×	×	✓	✓	✓
				[Mid], [Low]	×	×	×	×	×	✓	✓	✓	✓
		1920×1080P	1–60	[High], [Mid], [Low]	×	×	✓	×	✓	✓	✓	✓	✓
			66, 72, 75, 88, 90, 96, 100, 110, 120	[High], [Mid], [Low]	×	×	×	×	×	✓	✓	✓	✓
			150, 180, 200, 240	[High], [Mid], [Low]	×	×	×	×	×	×	✓	✓	✓

Recording format			S&Q shooting frame rate	[Quality]	SDXC							CFexpress Type A	
[Project Frame Rate]	[Codec]	Resolution			Class 10	U1	U3	VSC V10	VSC V30	VSC V60	VSC V90	VPG200	VPG400
	XAVC S Intra 422	4096×2160P	1–30	[High], [Mid], [Low]	×	×	×	×	×	×	✓	✓	✓
			31–60	[High], [Mid], [Low]	×	×	×	×	×	×	×	✓	✓
			66, 72, 75, 88, 90, 96, 100, 110, 120	[High], [Mid], [Low]	×	×	×	×	×	×	×	✓	✓
		3840×2160P*1	1–30	[High], [Mid], [Low]	×	×	×	×	×	×	✓	✓	✓
			31–60	[High], [Mid], [Low]	×	×	×	×	×	×	×	✓	✓
			66, 72, 75, 88, 90, 96, 100, 110, 120	[High], [Mid], [Low]	×	×	×	×	×	×	×	✓	✓
		1920×1080P*2	1–60	[High], [Mid], [Low]	×	×	×	×	×	×	✓	✓	✓
			66, 72, 75, 88, 90, 96, 100, 110, 120	[High], [Mid], [Low]	×	×	×	×	×	×	✓	✓	✓
			150, 180, 200, 240	[High], [Mid], [Low]	×	×	×	×	×	×	×	✓	✓
24 Hz	XAVC S Intra 422	4096×2160P	1–30	[High], [Mid], [Low]	×	×	×	×	×	×	✓	✓	✓
			31–60	[High], [Mid], [Low]	×	×	×	×	×	×	×	✓	✓
			66, 72, 75, 88, 90, 96, 100, 110, 120	[High], [Mid], [Low]	×	×	×	×	×	×	×	✓	✓

*1 Class 300
*2 Class 100

X-OCN format

Normal recording

✓: Operation guaranteed
×: Operation not guaranteed

Recording format			SDXC							CFexpress Type A	
[Project Frame Rate]	[Codec]	[Imager Mode]	Class 10	U1	U3	VSC V10	VSC V30	VSC V60	VSC V90	VPG200	VPG400
59.94 Hz	X-OCN LT	FF 5K 3:2	×	×	×	×	×	×	×	×	✓
		FF 5K 17:9	×	×	×	×	×	×	×	×	✓
		FF 5K 16:9	×	×	×	×	×	×	×	×	✓
		FFc 3.8K 16:9	×	×	×	×	×	×	×	×	✓
	X-OCN C1	FF 5K 3:2	×	×	×	×	×	×	×	×	✓
		FF 5K 17:9	×	×	×	×	×	×	×	×	✓
		FF 5K 16:9	×	×	×	×	×	×	×	×	✓
		FFc 3.8K 16:9	×	×	×	×	×	×	×	×	✓
	X-OCN C2	FF 5K 3:2	×	×	×	×	×	×	×	×	✓
		FF 5K 17:9	×	×	×	×	×	×	×	×	✓
		FF 5K 16:9	×	×	×	×	×	×	×	×	✓
		FFc 3.8K 16:9	×	×	×	×	×	×	×	×	✓
50 Hz	X-OCN LT	FF 5K 3:2	×	×	×	×	×	×	×	×	✓
		FF 5K 17:9	×	×	×	×	×	×	×	×	✓
		FF 5K 16:9	×	×	×	×	×	×	×	×	✓
		FFc 3.8K 16:9	×	×	×	×	×	×	×	×	✓
	X-OCN C1	FF 5K 3:2	×	×	×	×	×	×	×	×	✓
		FF 5K 17:9	×	×	×	×	×	×	×	×	✓
		FF 5K 16:9	×	×	×	×	×	×	×	×	✓
		FFc 3.8K 16:9	×	×	×	×	×	×	×	×	✓
	X-OCN C2	FF 5K 3:2	×	×	×	×	×	×	×	×	✓
		FF 5K 17:9	×	×	×	×	×	×	×	×	✓
		FF 5K 16:9	×	×	×	×	×	×	×	×	✓
		FFc 3.8K 16:9	×	×	×	×	×	×	×	×	✓

Recording format			SDXC							CFexpress Type A	
[Project Frame Rate]	[Codec]	[Imager Mode]	Class 10	U1	U3	VSC V10	VSC V30	VSC V60	VSC V90	VPG200	VPG400
23.98 Hz	X-OCN LT	FF 5K 3:2	×	×	×	×	×	×	×	×	✓
		FF 5K 17:9	×	×	×	×	×	×	×	×	✓
		FF 5K 16:9	×	×	×	×	×	×	×	×	✓
		FFc 3.8K 16:9	×	×	×	×	×	×	×	×	✓
	X-OCN C1	FF 5K 3:2	×	×	×	×	×	×	×	×	✓
		FF 5K 17:9	×	×	×	×	×	×	×	×	✓
		FF 5K 16:9	×	×	×	×	×	×	×	×	✓
		FFc 3.8K 16:9	×	×	×	×	×	×	×	×	✓
	X-OCN C2	FF 5K 3:2	×	×	×	×	×	×	×	×	✓
		FF 5K 17:9	×	×	×	×	×	×	×	×	✓
		FF 5K 16:9	×	×	×	×	×	×	×	×	✓
		FFc 3.8K 16:9	×	×	×	×	×	×	×	×	✓
29.97 Hz	X-OCN LT	FF 5K 3:2	×	×	×	×	×	×	×	×	✓
		FF 5K 17:9	×	×	×	×	×	×	×	×	✓
		FF 5K 16:9	×	×	×	×	×	×	×	×	✓
		FFc 3.8K 16:9	×	×	×	×	×	×	×	×	✓
	X-OCN C1	FF 5K 3:2	×	×	×	×	×	×	×	×	✓
		FF 5K 17:9	×	×	×	×	×	×	×	×	✓
		FF 5K 16:9	×	×	×	×	×	×	×	×	✓
		FFc 3.8K 16:9	×	×	×	×	×	×	×	×	✓
	X-OCN C2	FF 5K 3:2	×	×	×	×	×	×	×	×	✓
		FF 5K 17:9	×	×	×	×	×	×	×	×	✓
		FF 5K 16:9	×	×	×	×	×	×	×	×	✓
		FFc 3.8K 16:9	×	×	×	×	×	×	×	×	✓

Recording format			SDXC							CFexpress Type A	
[Project Frame Rate]	[Codec]	[Imager Mode]	Class 10	U1	U3	VSC V10	VSC V30	VSC V60	VSC V90	VPG200	VPG400
25 Hz	X-OCN LT	FF 5K 3:2	×	×	×	×	×	×	×	×	✓
		FF 5K 17:9	×	×	×	×	×	×	×	×	✓
		FF 5K 16:9	×	×	×	×	×	×	×	×	✓
		FFc 3.8K 16:9	×	×	×	×	×	×	×	×	✓
	X-OCN C1	FF 5K 3:2	×	×	×	×	×	×	×	×	✓
		FF 5K 17:9	×	×	×	×	×	×	×	×	✓
		FF 5K 16:9	×	×	×	×	×	×	×	×	✓
		FFc 3.8K 16:9	×	×	×	×	×	×	×	×	✓
	X-OCN C2	FF 5K 3:2	×	×	×	×	×	×	×	×	✓
		FF 5K 17:9	×	×	×	×	×	×	×	×	✓
		FF 5K 16:9	×	×	×	×	×	×	×	×	✓
		FFc 3.8K 16:9	×	×	×	×	×	×	×	×	✓
23.98 Hz	X-OCN LT	FF 5K 3:2	×	×	×	×	×	×	×	×	✓
		FF 5K 17:9	×	×	×	×	×	×	×	×	✓
		FF 5K 16:9	×	×	×	×	×	×	×	×	✓
		FFc 3.8K 16:9	×	×	×	×	×	×	×	×	✓
	X-OCN C1	FF 5K 3:2	×	×	×	×	×	×	×	×	✓
		FF 5K 17:9	×	×	×	×	×	×	×	×	✓
		FF 5K 16:9	×	×	×	×	×	×	×	×	✓
		FFc 3.8K 16:9	×	×	×	×	×	×	×	×	✓
	X-OCN C2	FF 5K 3:2	×	×	×	×	×	×	×	×	✓
		FF 5K 17:9	×	×	×	×	×	×	×	×	✓
		FF 5K 16:9	×	×	×	×	×	×	×	×	✓
		FFc 3.8K 16:9	×	×	×	×	×	×	×	×	✓

Recording format			SDXC							CFexpress Type A	
[Project Frame Rate]	[Codec]	[Imager Mode]	Class 10	U1	U3	VSC V10	VSC V30	VSC V60	VSC V90	VPG200	VPG400
24 Hz	X-OCN LT	FF 5K 3:2	×	×	×	×	×	×	×	×	✓
		FF 5K 17:9	×	×	×	×	×	×	×	×	✓
		FF 5K 16:9	×	×	×	×	×	×	×	×	✓
		FFc 3.8K 16:9	×	×	×	×	×	×	×	×	✓
	X-OCN C1	FF 5K 3:2	×	×	×	×	×	×	×	×	✓
		FF 5K 17:9	×	×	×	×	×	×	×	×	✓
		FF 5K 16:9	×	×	×	×	×	×	×	×	✓
		FFc 3.8K 16:9	×	×	×	×	×	×	×	×	✓
	X-OCN C2	FF 5K 3:2	×	×	×	×	×	×	×	×	✓
		FF 5K 17:9	×	×	×	×	×	×	×	×	✓
		FF 5K 16:9	×	×	×	×	×	×	×	×	✓
		FFc 3.8K 16:9	×	×	×	×	×	×	×	×	✓

TP1002215271

5-076-802-11(2) Copyright 2026 Sony Corporation

Clip Recording/Playback Time

The following tables show the recording/playback time when using a Sony CFexpress Type A VPG400 960 GB memory card (Units: minutes).

Note

- The recording/playback time is for a continuous recording as a single clip. The actual time may be shorter, depending on the number of clips recorded. The time may vary due to usage conditions and memory characteristics.

XAVC HS-L 422 / XAVC HS-L 420 / XAVC S-L 422

[Project Frame Rate]	[Imager Mode]	XAVC HS-L 422	XAVC HS-L 420	XAVC S-L 422	
		3840×2160P	3840×2160P	3840×2160P	1920×1080P
119.88	FF 5K 16:9	406	545	406	–
	FFc 4.5K 16:9	406	545	406	–
100	FF 5K 16:9	412	556	412	–
	FFc 4.5K 16:9	412	556	412	–
59.94	FF 5K 16:9	580	752	580	1837
	FFc 4.5K 16:9	580	752	580	–
	S35 3.2K 16:9	–	–	–	1837
50	FF 5K 16:9	587	763	587	1902
	FFc 4.5K 16:9	587	763	587	–
	S35 3.2K 16:9	–	–	–	1902
29.97	FF 5K 16:9	–	–	837	2047
	FFc 4.5K 16:9	–	–	837	–
	S35 3.2K 16:9	–	–	–	2047
25	FF 5K 16:9	–	–	843	2087
	FFc 4.5K 16:9	–	–	843	–
	S35 3.2K 16:9	–	–	–	2087
23.98	FF 5K 16:9	1150	1150	1150	2095
	FFc 4.5K 16:9	1150	1150	1150	–
	S35 3.2K 16:9	–	–	–	2095

XAVC S-L 420 / XAVC S-I

[Project Frame Rate]	[Imager Mode]	XAVC S-L 420		XAVC S-I		
		3840×2160P	1920×1080P	4096×2160P	3840×2160P	1920×1080P
119.88	FF 5K 16:9	545	953	–	–	–
	FFc 4.5K 16:9	545	–	–	–	–
	S35 3.2K 16:9	–	953	–	–	–
100	FF 5K 16:9	556	988	–	–	–
	FFc 4.5K 16:9	556	–	–	–	–
	S35 3.2K 16:9	–	988	–	–	–
59.94	FF 5K 17:9	–	–	205	–	–
	FF 5K 16:9	752	1837	–	205	528
	FFc 4.5K 17:9	–	–	205	–	–
	FFc 4.5K 16:9	752	–	–	205	–
	S35 3.2K 16:9	–	1837	–	–	528
50	FF 5K 17:9	–	–	246	–	–
	FF 5K 16:9	763	1902	–	246	630
	FFc 4.5K 17:9	–	–	246	–	–
	FFc 4.5K 16:9	763	–	–	246	–
	S35 3.2K 16:9	–	1902	–	–	630
29.97	FF 5K 17:9	–	–	408	–	–
	FF 5K 16:9	1135	2047	–	408	1034
	FFc 4.5K 17:9	–	–	408	–	–
	FFc 4.5K 16:9	1135	–	–	408	–
	S35 3.2K 16:9	–	2047	–	–	1034
25	FF 5K 17:9	–	–	488	–	–
	FF 5K 16:9	1147	2087	–	488	1225
	FFc 4.5K 17:9	–	–	488	–	–
	FFc 4.5K 16:9	1147	–	–	488	–
	S35 3.2K 16:9	–	2087	–	–	1225
23.98	FF 5K 17:9	–	–	508	–	–
	FF 5K 16:9	1150	2095	–	508	1277
	FFc 4.5K 17:9	–	–	508	–	–
	FFc 4.5K 16:9	1150	–	–	508	–
	S35 3.2K 16:9	–	2095	–	–	1277
24	FF 5K 17:9	–	–	508	–	–
	FFc 4.5K 17:9	–	–	508	–	–

X-OCN / HDMI RAW

[Project Frame Rate]	[Imager Mode]	X-OCN		
		LT	C1	C2
59.94	FF 5K 3:2	69	93	116
	FF 5K 17:9	88	117	146
	FF 5K 16:9	82	110	137
	FFc 3.8K 16:9	137	183	227
50	FF 5K 3:2	83	112	139
	FF 5K 17:9	105	141	175
	FF 5K 16:9	99	132	164
	FFc 3.8K 16:9	165	219	272
29.97	FF 5K 3:2	139	186	232
	FF 5K 17:9	175	234	291
	FF 5K 16:9	164	220	273
	FFc 3.8K 16:9	274	364	451
25	FF 5K 3:2	167	223	278
	FF 5K 17:9	210	280	348
	FF 5K 16:9	197	263	327
	FFc 3.8K 16:9	328	436	540
23.98	FF 5K 3:2	174	232	289
	FF 5K 17:9	218	292	363
	FF 5K 16:9	205	274	341
	FFc 3.8K 16:9	341	454	562
24	FF 5K 3:2	174	232	289
	FF 5K 17:9	218	292	363
	FF 5K 16:9	205	274	341
	FFc 3.8K 16:9	341	454	562

TP1002326227

5-076-802-11(2) Copyright 2026 Sony Corporation

Interchangeable Lens Digital Camera
ILME-FX5/ILME-FX5B

Inserting a Memory Card

This topic describes how to insert a memory card.

1. **Slide the switch of the card slot cover in direction 1 and hold it, then slide the cover in direction 2 to open the cover.**

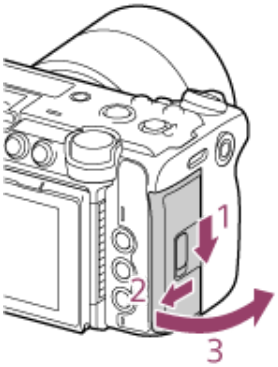

2. **Insert a memory card.**

- For CFexpress cards, the label (A) faces toward the LCD monitor side.

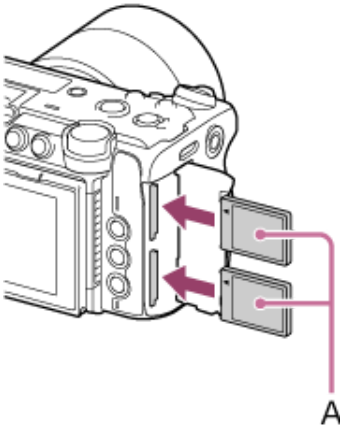

- For SD cards, the contacts face toward the LCD monitor side with the beveled corner (B) at the bottom.

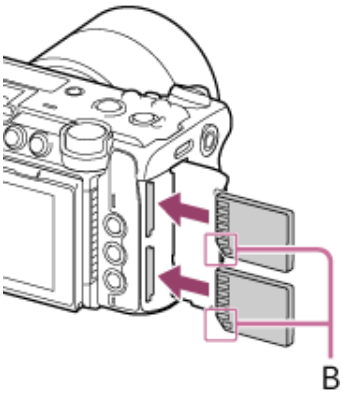

The access lamp (C) is lit red, then turns off when the access is finished.

Note

- If the access lamp flashes red continuously, temporarily turn off the unit, and remove and reinsert the memory card to see if that resolves the issue.

3 **Close the card slot cover.**

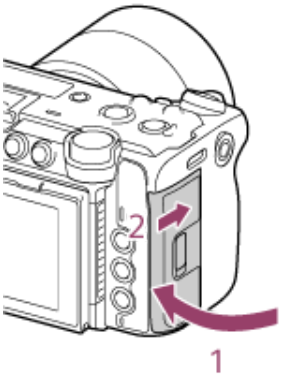

Note

- The memory card, card slot, and image data on the memory card may be damaged if the card is forced into the slot in the incorrect orientation.
- When recording to memory cards inserted in both card slots A and B, insert memory cards in both card slots that are recommended for operation with the format of the recording.
- Using a memory card other than the recommended memory cards may cause problems with recording.

Related Topic

- Memory Cards

TP1002215272

5-076-802-11(2) Copyright 2026 Sony Corporation

Ejecting a Memory Card

Open the card slot cover, and lightly press the memory card in to eject the card.

Note

- If the unit is turned off or the memory card is removed while the memory card is being accessed, the integrity of data on the card cannot be guaranteed. All data recorded on the memory card may be discarded. Always make sure the memory card access lamp is off before turning off the unit or removing the memory card.
- When removing a memory card immediately after recording is finished, the memory card may be hot, but this does not indicate a problem.

TP1002215273

5-076-802-11(2) Copyright 2026 Sony Corporation

Initializing Memory Cards

If an unformatted memory card or a memory card that was formatted in a different specification is inserted, a message is displayed on the LCD monitor/viewfinder.
Format the card using the following procedure.

1. **Select [TC/Media] – [Format Media] in the menu for the memory card you want to initialize and select [Full Format] or [Quick Format].**
   A confirmation message appears.

   - [Full Format]: Initializes the memory card completely, including the data region and data management information.
   - [Quick Format]: Initializes the data management information of the memory card only.

   Note

   - If there are files to be transferred on the memory card to be formatted, a supplementary message (display example: “A transfer target file exists.”) appears below the confirmation message. In this case, confirm whether or not to initialize the memory card and execute or cancel the initialization.

2. **Select [OK].**
   A message is displayed during execution, and the access lamp is lit red.
   When formatting is completed, a completion message is displayed. Press the multi-function dial to dismiss the message.

Hint

- Can also be executed using [TC/Media] – [Format Media] in the full menu.

Note

- Formatting a memory card erases all data, including recorded video data and setup files.
- Messages may not appear during execution depending on the formatting process duration.

If formatting fails

Memory cards not supported by the unit cannot be formatted.
A warning message is displayed. Follow the instructions to replace the card with a supported memory card.

To use a memory card formatted on the unit in another device

First, make a backup of the card, then reformat the card in the device to be used.

TP1002215274

5-076-802-11(2) Copyright 2026 Sony Corporation

Checking the Remaining Recording Time

When shooting (recording/standby), you can monitor the remaining capacity of the memory card in each card slot using the remaining media indicators on the shooting screen.
The remaining recording time is calculated from the remaining capacity of the memory card in each card slot and the currently configured recording format, and is displayed in units of minutes.

Memory card replacement timing

- When the total remaining recording time on the two memory cards becomes less than 5 minutes during recording, “Media Near Full” appears, the recording/tally lamp starts flashing, and a beep sound (headphone output) will warn you. Replace with memory cards that have free space.
- If you continue recording until the total remaining recording time reaches zero, the message changes to “Media Full” and recording stops.

Hint

- Up to approximately 9999 clips in XAVC S format or 600 clips in X-OCN format can be recorded on one memory card.

TP1002215275

5-076-802-11(2) Copyright 2026 Sony Corporation

Restoring Memory Cards

If for any reason an error should occur in a memory card, the card must be restored before use.
When you load a memory card that needs to be restored, a message appears on the LCD monitor/viewfinder to ask whether you want to restore it.

Restoring a card

Turn the multi-function dial to select [Execute], then press the multi-function dial.
A message and progress status (%) are displayed during the process, and the access indicator is lit red.
When restoration ends, a completion message appears.

If restoration fails

- Memory cards on which memory errors have occurred cannot be restored. A warning message is displayed. Follow the instructions to replace the memory card.
- Memory cards on which memory errors have occurred may become usable if they are reformatted.
- In some cases, some clips can be restored while others cannot. The restored clips can be played normally.

Note

- For restoration of media recorded with this unit, be sure to use this unit.
- Media recorded with a device other than this unit or with another unit of different version (even of the same model) may not be restored using this unit.
- Clips shorter than 2 seconds cannot be restored.

TP1002326217

5-076-802-11(2) Copyright 2026 Sony Corporation

Basic Shooting Procedure

Basic shooting is conducted using the following procedure.

1. **Attach the necessary devices, and check that power is being supplied.**
2. **Insert memory cards, as required.**
   If memory cards are inserted in both card slots A and B, the unit will automatically switch to the second card when the remaining capacity on the first card reduces to zero.
3. **Set the power switch to the On position.**
   The power lamp turns on, and the shooting screen appears on the LCD monitor or viewfinder.
4. **Press the record START/STOP button on the top side of the unit.**
   The recording/tally lamp lights and recording begins.
5. **To stop recording, press the record START/STOP button again.**
   Recording stops and the unit switches to [Stby] (recording standby) mode.

Note

- If the record START/STOP button is pressed within a few seconds after turning the unit on, the recording/tally lamp lights up to indicate the unit is in the recording state, but recording to the memory card may not occur for the first few seconds, depending on the selected recording format.

Shooting continuously while changing memory cards

When memory cards are inserted in both card slots A and B, recording automatically switches to the second memory card just before the remaining capacity on the first card reduces to zero (relay recording).
You can continue recording continuously when switching memory cards by replacing the memory card that is full with a new memory card.

Hint

- You can press an assignable button assigned with [Slot Select] during recording to manually switch the recording destination to the other memory card slot.

Note

- Do not eject a memory card while recording to it is in progress.
- When the remaining capacity on the memory card being recorded becomes less than one minute and a recordable memory card is inserted in the other card slot, a message appears. The message disappears after switching memory cards.
- Recording may not continue if recording is started when the remaining memory card capacity is less than one minute. For correct operation, check that the remaining memory card capacity is more than one minute before starting recording.
- Video created using the relay recording function of the unit cannot be played back seamlessly on the unit.
- To combine video created using the relay recording function of the unit, use “Catalyst Browse” software. Before use, check the “Catalyst Browse” operating environment.
- When using the relay recording function with SD cards, use SD cards of the same type.

About clips

Clips

When you stop recording, the video, audio, and accompanying data from the start to the end of the recording are saved as a single “clip” on a memory card.

Clip names

Each clip recorded by the unit is assigned a name using the naming format set using [TC/Media] – [Clip Name Format] in the full menu.

Maximum clip recording duration

In XAVC S audio recording format of 48kHz, the maximum is 13 hours, at which point recording stops automatically. In XAVC S audio recording format of 96kHz, the maximum is 12 hours, at which point recording stops automatically. In X-OCN format, the maximum is 24 hours, at which point recording stops automatically.

Monitoring audio

You can monitor the audio that is being recorded using headphones.
Connecting a set of headphones to the headphone connector enables you to monitor the audio being recorded. You can monitor the playback audio using the built-in speaker or headphones.
Select the channel to monitor using [Audio] – [Monitor CH] in the menu or [Audio] – [Audio Output] – [Monitor CH] in the full menu.

[Headphone Live/Processed] setting

Set [Audio] – [Audio Output] – [Headphone Live/Processed] to [Live] in the full menu to output audio without latency. Select this when monitoring audio if concerned about audio delay.
Set to [Processed] to check the effects of the noise cut filter and zoom noise filter functions while monitoring the audio during shooting. The audio and video are synchronized for output.

Hint

- The unit supports a screen display/menu screen reader function.

Time data

Setting the timecode

Set the timecode to record using [TC/Media] – [Timecode] in the full menu.

Setting user bits

You can add an 8-digit hexadecimal number to a clip as user bits. You can also set the user bits to the current time. Set using [TC/Media] – [Users Bit].

Displaying time data

Set the timecode to display using [TC/Media] – [TC Display] – [Time Data Display] in the full menu.
Pressing an assignable button assigned with [DURATION/TC/U-BIT] will switch the display between the timecode, user bits, and elapsed time in sequence.

Reviewing the recording

You can check the video of the last recorded clip on the screen using recording review mode.

Note

- Recording review is not supported if the video format is changed after recording a clip.

Recording review method

Assign [Rec Review] to one of the assignable buttons beforehand.
When recording is stopped, press an assignable button assigned with [Rec Review]. Playback of the last recorded clip begins.
The clip is played to the end, recording review ends, and the unit returns to [Stby] (recording standby) mode.

To stop recording review

Press an assignable button assigned with [Rec Review] or press the BACK button.

Recording review settings

You can set the playback start position to one of the following using the [Technical] – [Rec Review] setting in the full menu.

- Last 3 seconds of the clip
- Last 10 seconds of the clip
- Start of the clip

Hint

- If you want to review a specific clip after recording multiple clips, press the CLIPS button to display the clip list screen, and select the clip to start playback.
- You can also assign [Rec Review] to [User 1] to [User 6] on the user functions screen.

Related Topic

- Using the Screen Reader
- Playing a Clip
- Synchronizing Timecode with an External Device

TP1002215277

5-076-802-11(2) Copyright 2026 Sony Corporation

Selecting the Type of Zoom

Set the type of zoom using [Technical] – [Zoom] – [Zoom Type] in the full menu.

- [Optical Zoom Only]: Zooms within the zoom range of the lens.
- [On(Clear Image Zoom)]: Zooms using image processing with little or no deterioration in image quality.

<table>
<tr><th colspan="2">[Zoom Type] setting</th><th>[Optical Zoom Only]</th><th colspan="2">[On(Clear Image Zoom)]</th></tr>
<tr><th colspan="2">[Clear Image Zoom Type] setting</th><th>–</th><th>[Optical Zoom Priority]</th><th>[Smooth Priority]</th></tr>
<tr><td rowspan="5">Attached lens</td><td>Fixed-focus lens</td><td>–</td><td>Clear Image Zoom is supported.
(Controllable from the unit)</td><td>–
(Clear Image Zoom is not controllable from the lens or the unit)</td></tr>
<tr><td>Manual zoom lens</td><td rowspan="2">Optical zoom is supported.
(Controllable from the lens. Not controllable from the unit)</td><td rowspan="2">Optical zoom and Clear Image Zoom are supported.
(Optical zoom is controllable from the lens. Clear Image Zoom is controllable from the unit)</td><td rowspan="2">Optical zoom and Clear Image Zoom are supported.
(Optical zoom and Clear Image Zoom are controllable from the lens. Zoom is not controllable from the unit)</td></tr>
<tr><td>Power zoom lens
(When the SERVO/MANUAL switch of the lens is set to MANUAL)</td></tr>
<tr><td>Power zoom lens
(When the SERVO/MANUAL switch of the lens is set to SERVO)</td><td rowspan="2">Optical zoom is supported.
(Controllable from the lens or unit)</td><td colspan="2">Optical zoom and Clear Image Zoom are supported.
(Zoom is not controllable from the lens ring. Controllable from the lens or zoom lever of the unit)</td></tr>
<tr><td>Power zoom lens
(If the lens does not have a SERVO/MANUAL switch)</td><td colspan="2">Optical zoom and Clear Image Zoom are supported.
(Controllable from the lens or unit)</td></tr>
</table>

Note

- Clear Image Zoom cannot be used when [Project] – [Rec Format] – [Project Frame Rate] exceeds 60fps in the full menu.
- When [Clear Image Zoom Type] is set to [Optical Zoom Priority], operating the SERVO/MANUAL switch on a lens resets the magnification of Clear Image Zoom to 1×.

Setting Clear Image Zoom operation

You can set Clear Image Zoom operation when [Zoom Type] is set to [On(Clear Image Zoom)].
Set using [Technical] – [Zoom] – [Clear Image Zoom Type] in the full menu.

- [Smooth Priority]: Prioritizes smooth zoom operation.
- [Optical Zoom Priority]: Prioritizes optical zoom (prioritizes image quality and resolution).

Note

- [Smooth Priority] cannot be used with fixed-focus lenses and some manual zoom lenses.

5-076-802-11(2) Copyright 2026 Sony Corporation

Setting the Rotation Direction of the Zoom Ring

You can reverse the rotation direction of the zoom ring for some E-mount lenses.

Set using [Technical] – [Lens] – [Zoom Ring Direction] in the full menu.

TP1002308571

5-076-802-11(2) Copyright 2026 Sony Corporation

Interchangeable Lens Digital Camera
ILME-FX5/ILME-FX5B

Zooming using the Zoom Lever

You can control the zoom using the zoom lever (A). The zoom speed varies with the force applied to the lever.

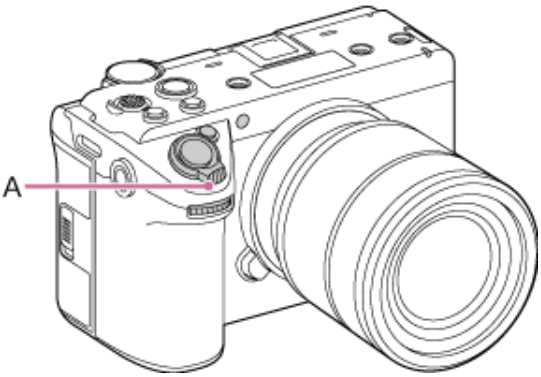

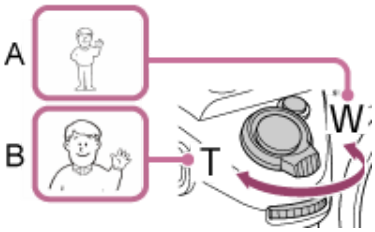

A: Press toward W (wide angle) to zoom out
B: Press toward T (telephoto) to zoom in

Hint

- You can select the type of zoom using [Technical] – [Zoom] – [Zoom Type] in the full menu.
- You can set the Clear Image Zoom operation using [Technical] – [Zoom] – [Clear Image Zoom Type] in the full menu.

Setting the speed of the zoom lever

Set the zoom speed of the zoom lever. You can set a 2-step zoom speed. Separate settings are available when in recording standby mode and when recording.
Set the zoom speed in the range [1(Slow)] to [8(Fast)] using [Technical] – [Zoom Lever Speed] in the full menu.

- [1st Zoom (Standby)]: Sets the zoom speed (1st level) for use in recording standby mode.
- [2nd Zoom(Standby)]: Sets the zoom speed (2nd level) for use in recording standby mode.
- [1st Zoom (Rec)]: Sets the zoom speed (1st level) for use during recording.
- [2nd Zoom(Rec)]: Sets the zoom speed (2nd level) for use during recording.

Hint

- Setting a faster zoom speed when in recording standby mode and slower for when recording will allow you to change the angle of view quickly when in recording standby mode and slowly when recording video.

Note

- The zoom speed does not change when using the zoom ring on a lens or the zoom lever on a power zoom lens.
- If the zoom speed is very fast, the zoom operation sound may also be recorded.

5-076-802-11(2) Copyright 2026 Sony Corporation

Setting the Zoom Speed of the Bluetooth Remote Control

You can set the zoom speed when zooming using the remote shooting function of a Bluetooth remote control (sold separately). Separate settings are available when in recording standby mode and when recording.

Set using [Technical] – [Bluetooth Zoom] in the full menu.

- [Zoom Speed Type]:
  Sets the zoom speed to [Fixed] or [Variable].
- [Fixed Speed (Standby)]:
  Sets the zoom speed within the range [1(Slow)] to [8(Fast)] for use in recording standby mode when [Zoom Speed Type] is set to [Fixed].
- [Fixed Speed (Rec)]:
  Sets the zoom speed within the range [1(Slow)] to [8(Fast)] for use during recording when [Zoom Speed Type] is set to [Fixed].

Hint

- When [Zoom Speed Type] is set to [Variable], pressing the zoom lever on the remote control will increase the zoom speed (some remote controls do not support variable zoom).
- When [Zoom Speed Type] is set to [Fixed], setting a faster value for [Fixed Speed (Standby)] and a slower value for [Fixed Speed (Rec)] will allow you to change the angle of view quickly when in recording standby mode and slowly when recording video.

Note

- If the zoom speed is very fast, the zoom operation sound may also be recorded.

TP1002274779

5-076-802-11(2) Copyright 2026 Sony Corporation

Adjusting the Focus Manually

To adjust the focus manually, set [Shooting] – [Focus] – [Focus Operation] to [Manual Focus] in the full menu.
Manual focusing is useful for the following types of subjects.

- Subjects on the far side of a window covered in water droplets
- Subjects with low contrast against the background
- Subjects further away than nearby subjects
- When focus is lost due to a large change in the ambient temperature (changes due to the temperature characteristics of the lens)

Hint

- If you wait 10 minutes or more after turning on the unit before adjusting the focus, the camera will maintain stable focus. In addition, if the ambient temperature fluctuates significantly, you can maintain optimal shooting conditions by re-adjusting the focus.
- You can also assign [Focus Operation] to [User 1] to [User 6] on the user functions screen.

Related Topic

- Changing the Focus Target Manually

TP1002215282

5-076-802-11(2) Copyright 2026 Sony Corporation

Focusing using Touch Operation

In manual focus mode, you can specify the position where you want to adjust the focus by touch operation.
To use spot focus, set [Shooting] – [Focus] – [Touch Function in MF] to [Spot Focus] in the full menu.
A spot focus mark is displayed when you tap the position where you want to adjust the focus.

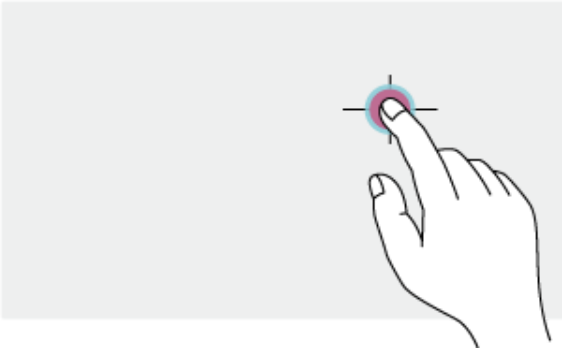

Note

- In spot focus mode, you can press an assignable button assigned with [Push AF/Push MF] to temporarily stop spot focus and enable auto focus while the button is pressed. The focus returns to manual focus when you release the button.
- If manual focus has been set on the lens itself, the spot focus function will not function.
- The spot focus position cannot be specified during focus magnification or when [Technical] – [Touch Operation] is set to [Off] in the full menu.

Related Topic

- Using the Touch Panel

TP1002215283

5-076-802-11(2) Copyright 2026 Sony Corporation

Using Auto Focus Temporarily

In manual focus mode, you can press an assignable button assigned with [Push AF/Push MF] to temporarily enable auto focus while the button is pressed.
Focusing occurs within the focus area set using [Shooting] – [Focus] – [Focus Area] in the full menu.
The focus returns to manual focus when you release the button.
This is useful when you want to move the focus slowly from one subject to another subject during manual focus.

Note

- If manual focus has been set on the lens itself, Push AF will not function.

TP1002215284

5-076-802-11(2) Copyright 2026 Sony Corporation

Fast Auto Focus (Single AF (AF-S))

In manual focus mode or auto focus mode, you can press an assignable button assigned with [Single-shot AF(AF-S)] to temporarily enable fast auto focus. Releasing the button before focus is achieved will cancel the operation.

The focus status is displayed by the focus indicator.

- Lit: Focusing is fixed at the focus position.
- Flashing: Out of focus. Since the camera cannot perform auto focus, adjust the composition and focus settings.

The focus returns to manual focus or auto focus when you release the button.
This is useful for quickly focusing before shooting.

Hint

- The same operation is supported using [Grab Button (Half Press)] assigned with [Single-shot AF(AF-S)].

Note

- If manual focus has been set on the lens itself, [Single-shot AF(AF-S)] will not function.
- When [Project] – [Assignable Button] – [Grab Button] is set to other than [Off], [Grab Button (Half Press)] is set to [Off].

TP1002308572

5-076-802-11(2) Copyright 2026 Sony Corporation

Focusing using Magnified View

You can select the destination for focus magnification using [Monitoring] – [Focus Magnifier] in the full menu. The function name of an assignable button used for focus magnification changes depending on the setting.
You can switch the focus magnification factor of the LCD monitor/viewfinder by pressing an assignable button assigned with [LCD/VF Focus Mag]. Each time you press this button, the magnification switches between 3× and 6×.
This function is useful for checking the focus.
Once the maximum magnification is applied, pressing the button again returns to the normal screen.
You can move the position to be magnified during focus magnification using the multi selector. Pressing the multi selector returns to the center of the image.
When an assignable button assigned with [HDMI Focus Mag] is pressed for an HDMI output image, the magnification switches between 2× and 4×.

Note

- The image is not magnified if the HDMI output video format is other than FHD.
- The magnified position returns to the center of the screen when the unit is turned off.
- When recording in X-OCN, if you apply focus magnification to the LCD monitor image with [LUT On/Off] set to [Off], an image with LUT applied may appear.

TP1002215285

5-076-802-11(2) Copyright 2026 Sony Corporation

Interchangeable Lens Digital Camera
ILME-FX5/ILME-FX5B

Adjusting the Focus Automatically

The unit achieves fast, highly accurate, and consistent auto focus using phase detection AF only.
When [Shooting] – [Focus] – [Lens Action If Cannot AF] is set to [Continue Focus Search] in the full menu, the unit also uses contrast detection AF in addition to phase detection AF, which allows the unit to continue auto focus operation using contrast detection AF in conditions and environments where phase detection AF cannot operate.
To adjust the focus automatically, set [Shooting] – [Focus] – [Focus Operation] to [Auto Focus] in the full menu.
If the lens has a focus switch, set it to “AF/MF” or “AF” beforehand. If set to “Full MF” or “MF,” the lens will not accept focus commands from the unit.

Hint

- When [Shooting] – [Focus] – [AF Assist] is set to [On] in the full menu, you can still use the focus ring of the lens during auto focus to adjust the focus. When you stop operating the focus ring, the unit will focus on the subject closest to the current focus position according to the [Subject Recognition AF] setting.

Note

- A lens that supports auto focus is required.
- Accuracy may not be obtained depending on the shooting conditions.
- When a lens that does not support on-sensor phase detection AF is attached, setting [Shooting] – [Focus] – [Lens Action If Cannot AF] to [Stop Focus Search] will set focusing to manual focus (fixed).

TP1002215286

5-076-802-11(2) Copyright 2026 Sony Corporation

Setting the Auto Focus Area/Position

You can set the target area for auto focus using [Shooting] – [Focus] – [Focus Area] in the full menu.

[Wide]

Searches for a focus position with focus over a wide angle of the image. A frame is not displayed.

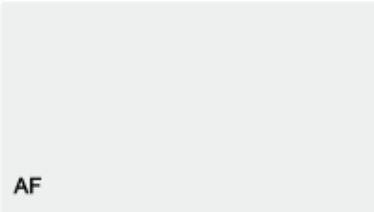

[Zone]

Automatically searches for a focus position within the specified zone.
When selected, specify the position using the multi selector.
You can return to the center position by pressing and holding the multi selector.

[Flexible Spot]

Focuses on a specified position in the image.
When selected, specify the position using the multi selector.
You can return to the center position by pressing and holding the multi selector.

Hint

- You can show/hide the focus area frame using [Monitoring] – [Display On/Off] – [Focus Area Indicator] in the full menu.

TP1002215287

5-076-802-11(2) Copyright 2026 Sony Corporation

Changing the Focus Area Quickly

You can change the position and size of the auto focus area quickly during shooting by assigning [Focus Setting] to an assignable button.
The operation varies depending on the [Focus Area] setting.

When [Focus Area] is set to [Wide]:

You can only change the size of the focus area by pressing and holding an assignable button assigned with [Focus Setting]. The position can then be changed by setting [Focus Area] to [Flexible Spot] or [Zone].

When [Focus Area] is set to [Zone] or [Flexible Spot]:

You can change the position of the focus area by pressing an assignable button assigned with [Focus Setting] and adjusting using the multi selector.
You can return the position of the focus area to the center while adjusting the position by pressing the multi selector.
You can change the size of the focus area by pressing and holding an assignable button assigned with [Focus Setting].
After changing the size, set the position of the focus area by pressing the multi selector.
When finished, press the assignable button assigned with [Focus Setting] to return to the original screen.

Hint

- The focus area frame is displayed orange when the position of the focus area can be changed.

TP1002215288

5-076-802-11(2) Copyright 2026 Sony Corporation

Interchangeable Lens Digital Camera
ILME-FX5/ILME-FX5B

Moving the Focus Area Frame using Touch Operation

You can move the focus area by pressing an assignable button assigned with [Focus Setting] to change the focus area display to orange, and then move it using touch operation.
Tap the screen to move the focus area, with the focus area centered on the tapped position. Drag on the screen to move the focus area to the position traced by your finger.

Hint

- You can enable/disable focus area frame touch operation on the shooting screen using an assignable button assigned with [Focus Setting].

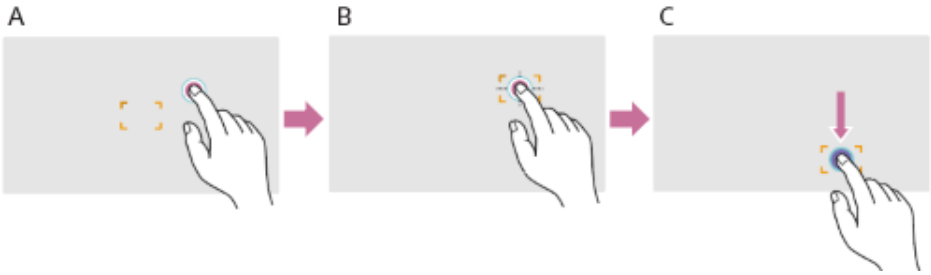

A: Tap the desired position
B: The focus area moves and is centered on the tapped position
C: Drag the focus area to the position traced by your finger

Note

- If you tap a position or drag the focus area to a position that exceeds the setting range, the focus area position is set to the top/bottom/left/right edge of the setting range.
- This function is not available in the following circumstances.
  - When [Technical] – [Touch Operation] is set to [Off] in the full menu
  - When the focus area frame is displayed in gray or is not displayed at all

Related Topic

- Using the Touch Panel

TP1002215289

5-076-802-11(2) Copyright 2026 Sony Corporation

Adjusting the Auto Focus Action (AF Transition Speed, AF Subject Shift Sensitivity)

AF transition speed

You can set the speed of the focus drive for when the subject changes using [Shooting] – [Focus] – [AF Transition Speed] in the full menu.
When [1(Slow)] is selected, the focus moves slowly when the subject to be focused changes, enabling the shooting of impressive images.
When [7(Fast)] is selected, the focus switches between subjects quickly. The subject that enters the frame is immediately focused, making this setting ideal for documentary shooting which requires quick focusing.

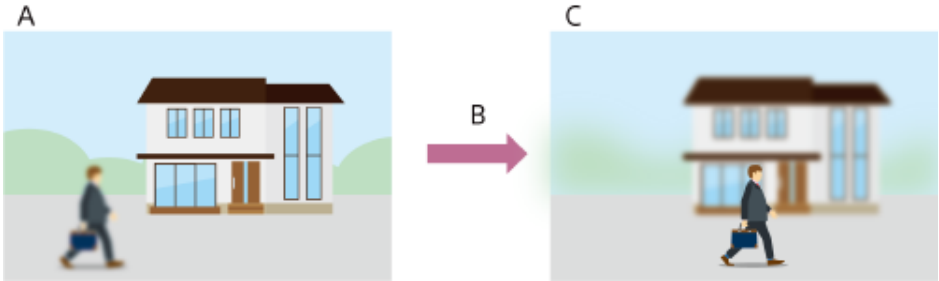

A: Subject in the background is in focus
B: Shifting between subjects
[1(Slow)]: Focus changes slowly
to
[7(Fast)]: Focus changes rapidly
C: Subject in the foreground is in focus

AF subject shift sensitivity

You can set the sensitivity for shifting between subjects using [Shooting] – [Focus] – [AF Subj. Shift Sens.] in the full menu.
When [1(Locked On)] is selected, the focus does not readily shift even if another subject moves in front of the in-focus subject.
When [5(Responsive)] is selected, the focus shifts to give priority to the subject that moves in front.

Hint

- If [AF Speed/Sens.] is assigned to an assignable button, the level bars for adjusting values are displayed in the following order each time the button is pressed, allowing you to change the [AF Transition Speed] and [AF Subj. Shift Sens.] settings.
  AF transition speed → AF subject shift sensitivity → No display …

[AF Subj. Shift Sens.]: [1(Locked On)]

Focus does not readily change to another subject
[AF Subj. Shift Sens.]: [5(Responsive)]

Focus changes to another subject rapidly

Hint

- You can also assign [AF Transition Speed] and [AF Subj. Shift Sens.] to [User 1] to [User 6] on the user functions screen.

TP1002215290

5-076-802-11(2) Copyright 2026 Sony Corporation

Changing the Focus Target Manually

When [Shooting] – [Focus] – [AF Assist] is set to [On] in the full menu, you can still use the focus ring of the lens during auto focus to adjust the focus on a subject.
When you stop using focus ring operation, auto focus continues to focus on the subject focused using the focus ring (AF assist state).
After operating the focus ring, moving the focus to another subject is slightly more difficult, regardless of the [Shooting] – [Focus] – [AF Subj. Shift Sens.] setting in the full menu.
The AF assist state is canceled by the following.

- When the subject focused using the focus ring is no longer visible
- When switching to manual focus
- When realtime tracking AF is started

Hint

- The AF assist state can be canceled quickly by using an assignable button assigned with [Push AF/Push MF].
- Realtime tracking AF stops when the focus ring is operated.
- In human only AF mode, auto focus focuses on the nearest face if a person is detected during or after focus ring operation.

TP1002215291

5-076-802-11(2) Copyright 2026 Sony Corporation

Using Manual Focus Temporarily

Press an assignable button assigned with [Push AF/Push MF] when in auto focus mode to focus manually while the button is pressed.
The focus returns to auto focus when you release the button.
This allows you to temporarily stop auto focus and focus manually when something that is not the subject of shooting crosses in front of the subject.

Hint

- The same operation is supported using an assignable button assigned with [Push AF/Push MF].
- Realtime tracking AF stops if realtime tracking AF is currently enabled.
- You can also assign [Push AF/Push MF] to [User 1] to [User 6] on the user functions screen.

TP1002215292

5-076-802-11(2) Copyright 2026 Sony Corporation

Detecting and Tracking a Subject

The unit can detect subjects as a target to track, and then adjust the focus on faces, eyes, head, or body within the focus area.
This function is available only when the focus mode is auto focus mode or during push auto focus.
When a subject is detected, a gray subject recognition frame is displayed. When auto focusing is possible, the frames change to white and tracking starts.
If a more pinpoint recognition area (such as the eyes) is recognized, that area will automatically be given priority and a recognition frame is displayed.
When multiple subjects are detected, the main subject is automatically determined.

Hint

- When the focus area is set to [Zone] or [Flexible Spot] and subjects overlap within the specified focus area, subject recognition frames are displayed on the recognized areas (face/eye/head/body).

Set the subject recognition AF operation using [Shooting] – [Focus] – [Subject Recognition AF] in the full menu.
[Human Only AF]:
The camera detects subjects (people) and focuses on and tracks their face/eyes/head/body.
While a face/eye/body/head is not detected, auto focus mode is temporarily stopped and the human only AF [!] (auto focus paused) icon is displayed. This mode is effective when you want to focus on and track faces, eyes, heads, or bodies only.
[Human Priority AF]:
The camera detects the face/eyes/head/body of subjects (people) and prioritizes the focusing/tracking on the face/eyes/head/body of people. When a face/eye/head/body is not detected, the unit automatically determines the optimum position within the image and maintains the focus on that position.
[Animal/Bird Prio. AF]:
The camera detects the eyes/head/body of subjects (animals and birds) and prioritizes focusing/tracking on the eyes/head/body of animals and birds. When an eye/head/body is not detected, the unit automatically determines the optimum position within the image and maintains the focus on that position.
[Animal Priority AF]:
The camera detects the eyes/head/body of subjects (animals) and prioritizes focusing/tracking on the eyes/head/body of animals. When an eye/head/body is not detected, the unit automatically determines the optimum position within the image and maintains the focus on that position.
[Bird Priority AF]:
The camera detects the eyes/head/body of subjects (birds) and prioritizes focusing/tracking on the eyes/head/body of birds. When an eye/head/body is not detected, the unit automatically determines the optimum position within the image and maintains the focus on that position.
[Off]:
The subject recognition AF function is disabled.

Note

- During push auto focus operation, [Human Priority AF] is activated even if [Human Only AF] is currently selected.
- When [Shooting] – [Focus] – [Focus Operation] is set to [Manual Focus] in the full menu, subject recognition frames are not displayed (excluding during push auto focus operation and realtime tracking AF operation).
- If you turn the unit off while [Human Only AF] is selected, the mode automatically switches to [Human Priority AF] when the unit is next turned on.

Removing subject recognition frames

You can show/hide subject recognition frames using [Monitoring] – [Display On/Off] – [Subject Recognition Frame] in the full menu.

Switching subject recognition AF operation using an assignable button

Assign [Subject Recognition AF] to an assignable button. You can then switch subject recognition AF operation in the order [Human Priority AF] → [Human Only AF] → [Animal/Bird Prio. AF] → [Animal Priority AF] → [Bird Priority AF] → [Off] each time

you press the button.

Hint

- You can also assign [Subject Recognition AF] to [User 1] to [User 6] on the user functions screen.
- You can set the recognition target when an assignable button assigned with [Subject Recognition AF] is pressed using [Shooting] – [Focus] – [Recognition Target Select] in the full menu.

Setting using the direct menu

You can also set the subject recognition AF operation using the direct menu.

Related Topic

- Assignable Buttons
- Direct Menu

TP1002215293

5-076-802-11(2) Copyright 2026 Sony Corporation

Tracking a Specified Subject

You can maintain focus on a subject by specifying the subject by touch operation or by selecting a subject recognition frame. When a subject is selected, a white tracking frame is displayed and tracking starts.

Hint

- Tracking occurs over the entire image area, regardless of the focus area setting.

When [Shooting] – [Focus] – [Touch Function in MF] is set to [Tracking AF] in the full menu, realtime tracking AF is supported even when the focus mode is manual focus mode.
The following actions occur for the tracking target, depending on the subject recognition AF operating mode.
[Human Only AF] / [Human Priority AF]:
Use for focusing and tracking of a specified subject.
If the tracking target is a person and a face/eye/head/body is detected, the camera focuses on that face/eye/head/body.
When a face/eye/head/body is detected, the tracking target face is saved. When saved, the (saved tracking face) icon is displayed.
[Animal/Bird Prio. AF] / [Animal Priority AF] / [Bird Priority AF]:
Use for focusing and tracking of a specified subject.
If the tracking target is an animal or bird and a eye/head/body is detected, the camera focuses on that eye/head/body.
[Off]:
Use for focusing and tracking of a specified subject.
Face/eye/head/body detection does not occur, even if the tracking target is a person, animal, or bird.

TP1002215294

5-076-802-11(2) Copyright 2026 Sony Corporation

Starting Realtime Tracking AF

When a specific subject is specified as the tracking target, tracking of that target starts.

Specifying by touch operation

Tap the target subject to track in one of the following states:

- When the focus mode is manual focus mode or during push manual focus, and [Shooting] – [Focus] – [Touch Function in MF] is set to [Tracking AF] in the full menu
- When the focus mode is auto focus mode or during push auto focus (AF)

Note

- Touch operation is not available when [Technical] – [Touch Operation] is set to [Off] in the full menu.

Specifying using the tracking AF pointer

When [Shooting] – [Focus] – [Multi Selector Function] is set to [Pointer] in the full menu, you can select a subject on the screen using the multi selector instead of touch operation.
Move the tracking AF pointer to the target subject to track using the multi selector, and press the multi selector.

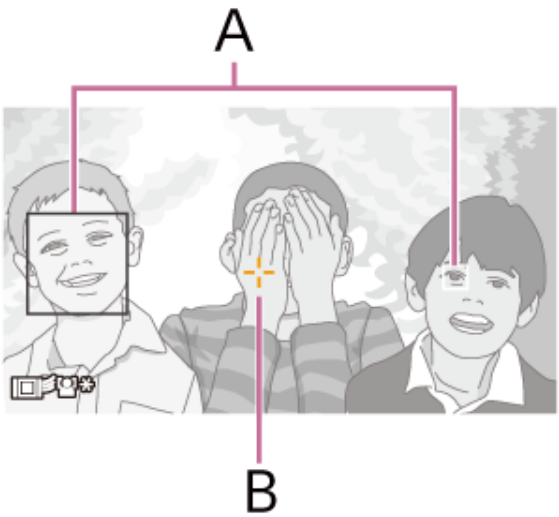

A: Eye/face detection frame
B: Tracking AF pointer
This is convenient when using the viewfinder or when touch panel operation is disabled.
You can change the color and edge of the tracking AF pointer to make it easier to see or to prevent the pointer from interfering with shooting.
The pointer color and edge can also be configured using [Shooting] – [Focus] – [Pointer Color] / [Pointer Border] in the full menu.

Specifying by subject recognition frame selection

When [Shooting] – [Focus] – [Multi Selector Function] is set to [Subject Sel. Cursor] in the full menu, you can select a subject recognition frame using the multi selector.
Move the subject selection cursor (orange underline) to the target subject to track using the multi selector, and press the multi selector.

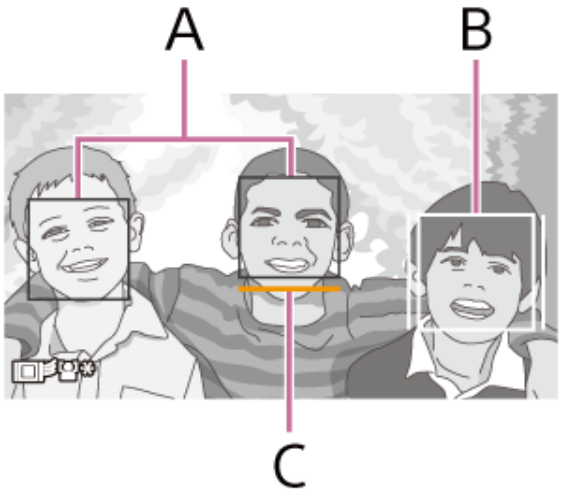

A: Other face detection frames (gray)
B: Tracking frame
C: Face selection cursor (orange)

Hint

- You can also change the target to track during realtime tracking AF.

Note

- During manual focus, tracking cannot be started using subject recognition frame selection.

TP1002215295

5-076-802-11(2) Copyright 2026 Sony Corporation

Interchangeable Lens Digital Camera
ILME-FX5/ILME-FX5B

Stopping Realtime Tracking AF

Stopping by touch operation

Tap the (Realtime tracking AF stop) button displayed at the top left of the touch panel.

Hint

- Realtime tracking AF will stop in the following cases:
  - When an assignable button assigned with [Push AF/Push MF] is pressed
  - When switching between [Auto Focus] and [Manual Focus] using [Shooting] – [Focus] – [Focus Operation] in the full menu
  - When the focus mode is changed
  - When AF assist is executed
  - When the focus area setting or subject recognition AF operation is changed
  - When the tracking target is not within the shooting screen and focus on the subject is lost for a few seconds

TP1002215296

5-076-802-11(2) Copyright 2026 Sony Corporation

Focus Map

When shooting video, areas that are in focus and areas that are out of focus are displayed so that you can visually distinguish them. Areas behind the in-focus region are indicated by dots in a cool color (A) and those in front of the in-focus region are indicated by dots in a warm color (B). Dots are not displayed in the in-focus range. Dots are not recorded in the actual video.

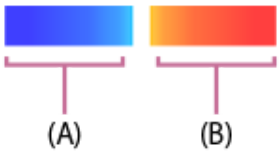

Turn the focus map on/off using [Monitoring] – [Focus Map] – [Setting] in the full menu.

Note

- [Focus Map] is unavailable in the following cases.
  - During false color display
  - During video signal monitor display
  - During focus magnification
  - When not shooting (for example, during playback or thumbnail display)
  - When the de-squeeze display setting is other than [Off(1.0x)]
  - When the attached lens does not support focal plane phase detection AF

TP1002274780

5-076-802-11(2) Copyright 2026 Sony Corporation

Notes on Shooting

Focusing on subjects may not be possible in the following cases, depending on the shooting conditions.

- Low illumination, backlighting
- In shadow
- Considerably out of focus

Also, even if the camera recognizes the eyes of a subject, the camera may not be able to focus on the eyes properly in the following cases if there is significant subject movement.

- Eyes are closed
- Hair covering the eyes
- Wearing of spectacles (sunglasses)

Focusing on subjects may not be possible in other cases, depending on the shooting conditions.

- If it is not possible to focus on a specific area of the subject that you want to prioritize, such as the eyes, the camera may automatically focus on other recognized areas, such as the head or body of the subject.
- Even if a white subject recognition frame is displayed around the face of a subject, the camera may automatically focus on the eyes or other areas of the subject.
- If only a part of the subject is within the angle of view, the subject may not be recognized.
  - When only the hands and feet of a person or animal are visible
  - When a part of the subject is hidden and is not visible.
- Depending on the situation, objects or body parts other than the subject may be mistakenly recognized as the subject.

TP1002215297

5-076-802-11(2) Copyright 2026 Sony Corporation

Selecting the Base Sensitivity

You can select from two types of base sensitivity on the unit.

In [Custom] shooting mode, select from [Shooting] – [ISO/Gain] – [Base Sensitivity] – [High] / [Mid] / [Low] / [Low(Dual Gain)] in the full menu.
In [Cine EI] / [Flexible ISO] log shooting mode, select from [Shooting] – [ISO/Gain] – [Base ISO] – [ISO 12800] / [ISO 4000] / [ISO 800] / [ISO 800(Dual Gain)] in the full menu. In [Cine EI Quick] mode, the base sensitivity is linked to the selected [Exposure Index] setting.
Under normal lighting conditions, select [Low] or [ISO 800]. Under low lighting conditions, select [High] or [ISO 12800].

Hint

- You can also assign [Base ISO/Sensitivity] to an assignable button.

TP1002326218

5-076-802-11(2) Copyright 2026 Sony Corporation

Adjusting the Iris

You can adjust the iris to adjust the brightness.

Adjusting the iris automatically

This function adjusts the brightness according to the subject. A compatible lens is required.

1. **If the lens has an Auto Iris switch, set it to the AUTO position.**
2. **On the iris settings screen (item 4) of the Home screen, press the [Auto] button and select [Auto].**

Hint

- The same operation is supported by selecting [Auto] in the [Auto Iris] direct menu.
- You can also assign [Auto Iris] to an assignable button.

Note

- The iris cannot be adjusted automatically for an A-mount lens.

Adjusting the iris manually

1. **On the iris settings screen (item 4) of the Home screen, select [Manual].**
2. **Turn the multi-function dial to adjust the value.**

Hint

- You can also operate the multi-function dial as an iris dial by assigning [IRIS] to the multi-function dial.
- You can also assign [IRIS] to an assignable dial.

Temporarily adjusting automatically

Press an assignable button assigned with [Push Auto Iris] to automatically adjust the iris temporarily while the button is pressed. The iris returns to the previous setting when you release the button.

Note

- When the Auto Iris switch of the lens is set to the MANUAL position, the [Auto Iris] setting of the unit is not applied and operation of an assignable button assigned with [Push Auto Iris] is no longer accepted. Manual iris adjustment operations from the unit are also no longer accepted.

TP1002215298

5-076-802-11(2) Copyright 2026 Sony Corporation

Adjusting the Gain

You can adjust the gain when the shooting mode is set to [Custom] to adjust the brightness.

Adjusting the gain automatically

Press and hold an assignable button assigned with [ISO/Gain] to display the [AGC] direct menu and select [Auto].

Hint

- The same operation is supported by setting [Shooting] – [Auto Exposure] – [AGC] to [On] in the full menu.
- You can also assign [AGC] to an assignable button.
- When [Shooting] – [Image Stabilization] – [SteadyShot] is set to [Dynamic Active] in the full menu, the range of options for [ISO/Gain] that can be selected is narrower.

Adjusting the gain manually

You can control the gain when you want to adjust the exposure while using a fixed iris setting or when you want to prevent the gain increasing due to AGC.

1. **Press and hold an assignable button assigned with [ISO/Gain] to display the [AGC] direct menu and select [Manual].**
2. **Press and hold an assignable button assigned with [ISO/Gain] to display the gain value direct menu and set the gain.**

Hint

- You can also assign [Push AGC] to an assignable button, and set [AGC] to [On] temporarily while the button is pressed.
- You can also change the gain value using [Shooting] – [ISO/Gain] – [ISO/Gain Select] in the full menu.

Adjusting the gain (fine adjustment)

1. Press and hold an assignable button assigned with [ISO/Gain] to display the gain value direct menu.
2. Turn the multi-function dial to adjust the value.

Controlling the gain temporarily (fine adjustment)

Assign [ISO/Gain/EI] to the assignable dial and adjust the set value using the dial.
This is useful when you want to adjust the exposure by one step without changing the depth of field.
The temporarily adjusted value is canceled by switching the base sensitivity, setting [AGC] to [On], or turning the power off.

Hint

- You can also assign [ISO/Gain/EI] to the multi-function dial.
- You can also assign [Push AGC] to an assignable button, and set [AGC] to [On] temporarily while the button is pressed.

TP1002215299

5-076-802-11(2) Copyright 2026 Sony Corporation

Dual Gain

The dual-gain function expands the dynamic range of dark areas in the video, allowing you to shoot video with smoother tonal gradations.

Dual-gain settings are available for custom shooting mode and log shooting mode.

- **Custom shooting mode**
  Set [Shooting] – [ISO/Gain] – [Base Sensitivity] to [Low(Dual Gain)] in the full menu.

- **Log shooting mode**
  Set [Shooting] – [ISO/Gain] – [Base ISO] to [ISO 800(Dual Gain)] in the full menu.

Note

- There are conditions under which [Low(Dual Gain)] and [ISO 800(Dual Gain)] can be configured. For details, see “Imager mode and recording formats” in “Configuring Basic Operation.”
- Using the dual-gain function when shooting will significantly increase the power consumption, which may affect the continuous shooting time.
- It is not possible to switch the base sensitivity to [Low(Dual Gain)] or [ISO 800(Dual Gain)] using an assignable button assigned with [Base ISO/Sensitivity]. Also, if [Low(Dual Gain)] or [ISO 800(Dual Gain)] is selected in the full menu, an assignable button assigned with [Base ISO/Sensitivity] is disabled.

TP1002308573

5-076-802-11(2) Copyright 2026 Sony Corporation

Adjusting the Shutter

You can adjust the shutter to adjust the brightness.

Adjusting the shutter automatically

Press and hold an assignable button assigned with [Shutter] to display the direct menu and select [Auto] to adjust the shutter speed or shutter angle automatically in response to the image brightness.

Hint

- The same operation is supported by setting [Shooting] – [Auto Exposure] – [Auto Shutter] to [On] in the full menu.

Adjusting the shutter manually

1. **Press and hold an assignable button assigned with [Shutter] to display the direct menu and select [Step] or [Continuous].**
   [Step]: Sets a preset speed or shutter angle.
   [Continuous]: Sets a variable speed or shutter angle.

2. **Press an assignable button assigned with [Shutter] so that the shutter value is displayed on a white background.**
3. **Turn the multi-function dial to adjust the shutter speed.**

Hint

- To adjust the exposure time to match the frame interval, select [Off] in step 1.

TP1002215300

5-076-802-11(2) Copyright 2026 Sony Corporation

Adjusting the White Balance Automatically

This function adjusts the white balance automatically to an appropriate level.
The white balance is automatically adjusted when the color temperature of the light source changes.
Press and hold an assignable button assigned with [White Balance] to display the direct menu and select [ATW].
Select the speed of adjustment using [Shooting] – [White Balance Setting] – [ATW Speed] in the full menu.

Hint

- You can also use [Shooting] – [White Balance] – [ATW] in the full menu or an assignable button assigned with [ATW] to set [ATW] to [On].
- You can also freeze the current white balance setting in ATW mode by assigning the [ATW Hold] function to an assignable button and pressing the assignable button to temporarily pause ATW mode.

Note

- It may not be possible to adjust to the appropriate color using ATW, depending on the lighting and subject conditions.
  Examples:

  - When a single color dominates the subject, such as sky/sea/ground/flowers or similar.
  - When the subject is lit by a light source with extremely high or extremely low color temperature.
  - If the ATW auto tracking speed is slow or the appropriate effect cannot be obtained, run auto white balance.

TP1002215302

5-076-802-11(2) Copyright 2026 Sony Corporation

Adjusting the White Balance Manually

- **When [ATW] is set to [On]:**
  Press and hold an assignable button assigned with [White Balance] to display the [ATW] direct menu and select one of [W:A] to [W:H].
- **When [ATW] is set to [Off]:**
  Press and hold an assignable button assigned with [White Balance] and select one of [W:A] to [W:H] in the direct menu.

  - [W:A]: Memory position A
  - [W:B]: Memory position B
  - [W:C]: Memory position C
  - [W:D]: Memory position D
  - [W:E]: Memory position E
  - [W:F]: Memory position F
  - [W:G]: Memory position G
  - [W:H]: Memory position H

  The memory position A to H selection is performed on the Home screen.

Hint

- Also selectable using [Shooting] – [White Balance] – [White Select] in the full menu.

Each memory position can be set in the following ways:

- Changing to a default preset value
- Changing the color temperature
- Running auto white balance

Changing to a default preset value

You can change to a default preset value directly.
Press and hold an assignable button assigned with [White Balance] to display the direct menu and select the following.
Custom shooting mode: → [3200K] → [4300K] → [5600K] → [6300K]
Log shooting mode: → [3200K] → [4300K] → [5500K]

Hint

- When a default preset value is selected, the tint value is set to ±0.

Changing the color temperature

1. **Press an assignable button assigned with [White Balance] so that the color temperature value is displayed on a white background.**
2. **Turn the multi-function dial to adjust the value.**

Hint

- You can set the value in 20K increments in the range [2000K] to [5600K]. Values above [5600K] can be set at intervals equal to the amount of color change from [5580K] to [5600K]. Also adjustable using [Shooting] – [White Balance] – [Tint] in the full menu.

Running auto white balance

The white balance to save in memory positions A to H is configured automatically.

1. **Select one of the memory positions A to H.**
2. **Place white paper (or other object) in a location with the same lighting source and conditions as the subject, then zoom in on the paper to show white on the screen.**

3. **Adjust the brightness.**
   Adjust the iris manually. For details, see the following topic.
   Adjusting the Iris

4. **Select one of [W:A] to [W:H] in the direct menu and select [AWB].**

- If auto white balance is run in memory mode, the result of auto adjustment is saved in the memory position (one of A to H) selected in step 1.
- If auto white balance is run in ATW mode, the result is inherited and ATW resumes when the auto adjustment ends. This is useful when you want to adjust the white balance very quickly, regardless of the [ATW Speed] setting.

Hint

- Can also be executed from the Home screen, using [Shooting] – [White Balance] – [Auto White Balance] in the full menu, or using an assignable button assigned with [Auto White Balance].

Note

- If the adjustment is not successful, an error message is displayed on the screen for about three seconds. If the error message persists after repeated attempts to set the white balance, contact your Sony service representative.

TP1002215303

5-076-802-11(2) Copyright 2026 Sony Corporation

Using Image Stabilization

You can suppress blurring of the image due to shaking when shooting by enabling the image stabilization function.

Note

- Image stabilization cannot be used when [Project] – [Anamo. De-Squeeze] – [Ratio] is set to other than [Off(1.0x)] in the full menu.

Enabling image stabilization

Set [Shooting] – [Image Stabilization] – [SteadyShot] to [Standard] / [Active] / [Dynamic Active] in the full menu.

- [Standard]: Reduces blurring of captured images caused by camera shake.
- [Active]: Applies more powerful correction than [Standard] for correcting stronger camera shake, such as shooting while walking. The framing shifts slightly to the telephoto side.
- [Dynamic Active]: Applies more powerful correction than [Active]. The framing is also narrower than [Active].
- [Off]: Turns image stabilization mode off.

When not using image stabilization, set [SteadyShot] to [Off]. In this case, the use of a tripod is recommended.

Hint

- When shooting using a tripod for stability, set image stabilization to [Off]. If you perform slow pan/tilt movements with image stabilization set to other than [Off], the image may become distorted.
- You can also assign [SteadyShot] to [User 1] to [User 6] on the user functions screen.

Note

- In the following cases, image stabilization cannot be set to [Active].
  - When [Project] – [Rec Format] – [Codec] is set to [X-OCN LT] / [X-OCN C1] / [X-OCN C2] in the full menu
  - When [Shooting] – [FPS] – [Fixed/Variable Select] is set to [Variable] in the full menu and [FPS Select] is set to 150fps or higher
  - When [Shooting] – [FPS] – [Fixed/Variable Select] is set to [Variable] in the full menu, [FPS Select] is set to 66fps or higher, and [Imager Mode] is set to FF 5K 17:9 / FFc 4.5K 17:9.
- In the following cases, image stabilization cannot be set to [Dynamic Active].
  - When [Project] – [Rec Format] – [Codec] is set to [X-OCN LT] / [X-OCN C1] / [X-OCN C2] in the full menu
  - When [Project Frame Rate] is set to 100 or higher
  - When [Shooting] – [FPS] – [Fixed/Variable Select] is set to [Variable] in the full menu and [FPS Select] is set to 66fps or higher

Setting the focal length automatically

The image stabilization focal length is automatically set based on information obtained from the lens.
To set the image stabilization focal length automatically, set [Shooting] – [Image Stabilization] – [Stabilization Adjustment] to [Auto] in the full menu.

Setting the focal length manually

You can set the image stabilization focal length manually.
To set the image stabilization focal length manually, set [Shooting] – [Image Stabilization] – [Stabilization Adjustment] to [Manual] in the full menu and set the focal length.
Set the focal length using [Shooting] – [Image Stabilization] – [Focal Length] in the full menu. You can set a focal length in the range 8 mm to 1000 mm.

5-076-802-11(2) Copyright 2026 Sony Corporation

Interchangeable Lens Digital Camera
ILME-FX5/ILME-FX5B

Setting the Audio to Record using the XLR Handle Unit (ILME-FX5 only)

You can specify the audio to be recorded using the input connectors, switches, and dials of the XLR handle unit.
The XLR handle unit comprises a handle and XLR adaptor in a single unit. You can record audio by attaching the XLR handle unit to the unit and connecting various external audio devices.
The Multi Interface Shoe supports a digital audio interface. Audio recording can be performed with reduced noise interference by transmitting digital signals between the unit and the XLR handle unit.

Related Topic

- Attaching the XLR Handle Unit (ILME-FX5 only)
- Menu Screen

TP1002215305

5-076-802-11(2) Copyright 2026 Sony Corporation

Selecting Audio Input Devices on the XLR Handle Unit (ILME-FX5 only)

1. **Connect the devices that you want to connect to the INPUT1 connector/INPUT2 connector/INPUT3 connector of the XLR handle unit.**

If using only one of the INPUT1 connector and INPUT2 connector, connect the device to the INPUT1 connector.
If connecting a device to the INPUT3 connector, skip to step 3.

2. **Select the input audio source.**

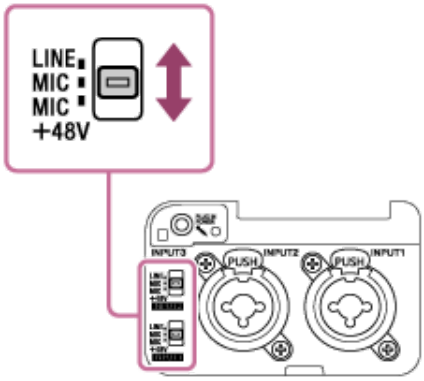

If connecting devices to the INPUT1 connector/INPUT2 connector, set the INPUT1 (LINE/MIC/MIC+48V)/INPUT2 (LINE/MIC/MIC+48V) switches to match the connected devices.

- LINE (reference input level: +4 dBu (0 dBu = 0.775 Vrms)): External audio device (e.g. mixer)
- MIC: Dynamic microphone, battery-operated microphone
- MIC+48V: +48 V phantom power microphone
- Before connecting/disconnecting a microphone, be sure to set the INPUT1 (LINE/MIC/MIC+48V) switch to a position other than MIC+48V. Plugging/unplugging a cable while the switch is set to MIC+48V may cause a loud noise or a malfunction of the microphone.
- Selecting MIC+48V and connecting a microphone that is not compatible with a +48 V source may damage the connected device. Check the setting before connecting the device.
- If noise is a concern on connectors with no device connected, set the corresponding INPUT1/INPUT2 (LINE/MIC/MIC+48V) switches to LINE.

3. **Select the channel to output from the XLR handle unit using the INPUT SELECT (CH1/CH2) / INPUT SELECT (CH3/CH4) switch.**

Select the input audio to assign to each channel that is output from the XLR handle unit using INPUT1, INPUT2, or INPUT3.

4. **Set the reference input level of microphones using the ATT (INPUT1 / INPUT2 / INPUT3) switch for the inputs to which the devices are connected.**

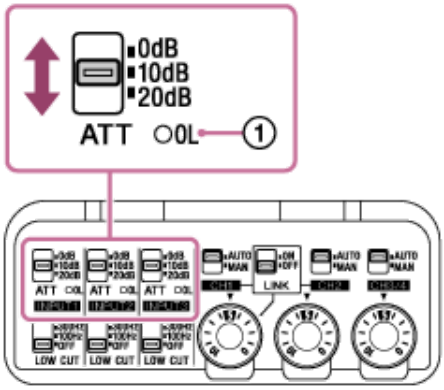

- 0dB: When you want to amplify the sound when recording, such as when using a microphone with low sensitivity.
  - INPUT1/INPUT2: Reference input level −60 dBu
  - INPUT3: Reference input level −76 dBu
- 10dB: Recommended audio recording level for a human voice.
  - INPUT1/INPUT2: Reference input level −50 dBu
  - INPUT3: Reference input level −66 dBu
- 20dB: When you want to suppress the sound when recording, such as when using a microphone with high sensitivity.
  - INPUT1/INPUT2: Reference input level −40 dBu
  - INPUT3: Reference input level −56 dBu

Note

- The ATT (INPUT1 and INPUT2) switches are enabled only when the corresponding INPUT1 (LINE/MIC/MIC+48V) switch or INPUT2 (LINE/MIC/MIC+48V) switch is set to the “MIC” position or “MIC+48V” position.
  When set to the “LINE” position, the reference input level is +4 dBu (fixed), and the reference input level does not change even if the ATT switch position is changed.

Hint

- If there is loud input audio that would cause analog clipping, the OL (overload) lamp (①) of the XLR handle unit lights up. If this occurs, adjust the input level using the ATT switch on the connected device or the XLR handle unit, so that the audio level is within the range where the lamp does not turn on.

5 Adjust the audio recording level.

For details about adjusting, see “Adjusting the Audio Recording Level using the XLR Handle Unit (ILME-FX5 only).”

TP1002215306

5-076-802-11(2) Copyright 2026 Sony Corporation

Interchangeable Lens Digital Camera
ILME-FX5/ILME-FX5B

Reducing Noise using the LOW CUT function of the XLR Handle Unit (ILME-FX5 only)

This function attenuates the low-frequency components of the audio input from the INPUT1/INPUT2/INPUT3 connectors, reducing unnecessary noise, such as wind noise, air conditioning noise, and vibration noise.

1. **Set the LOW CUT (INPUT1/INPUT2/INPUT3) switches.**

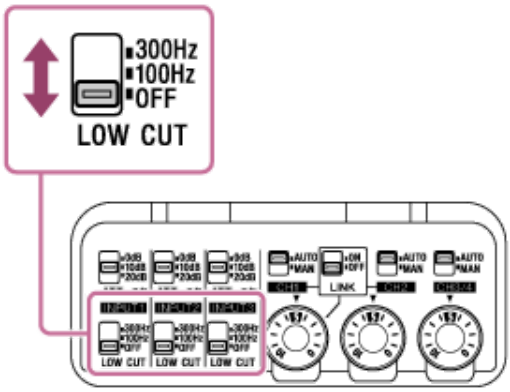

Select either “300Hz” or “100Hz,” depending on the noise you want to reduce.

Note

- The LOW CUT (INPUT1 and INPUT2) switches are enabled only when the corresponding INPUT1 (LINE/MIC/MIC+48V) switch or INPUT2 (LINE/MIC/MIC+48V) switch is set to the “MIC” position or “MIC+48V” position.

TP1002308574

5-076-802-11(2) Copyright 2026 Sony Corporation

Adjusting the Audio Recording Level using the XLR Handle Unit (ILME-FX5 only)

Adjust the audio recording level for the audio input from the INPUT1/INPUT2/INPUT3 connectors.

1. **Set the AUTO/MAN (CH1 / CH2 / CH3/4) switches for the channels with the audio to adjust to the “MAN” position.**

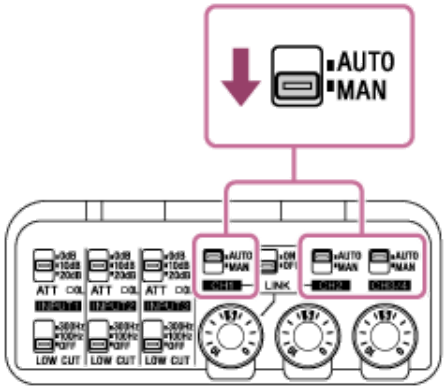

2. **Turn the AUDIO LEVEL dial to adjust the volume to the appropriate level.**

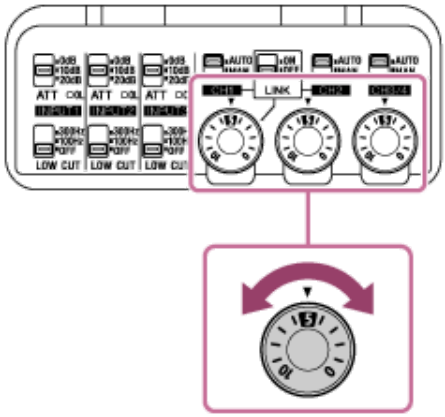

To check for the appropriate level, use the level meter of the camera or connect headphones to the camera.

To adjust the audio recording level automatically

Set the AUTO/MAN switch to the “AUTO” position.
If the input audio is loud, the audio recording level will be automatically reduced to prevent distortion.

Hint

- When recording in 32-bit float format, the audio recording level automatic adjustment function is disabled. The audio recording level is set to “5” (fixed) on the AUDIO LEVEL dial when the AUTO/MAN switch is set to the “MAN” position. However, as long as analog clipping does not occur, sounds from quiet to loud can be recorded without distortion.
  You can also edit the audio data so that it is at the optimal level without distortion by adjusting the gain of the recorded audio file.
- When the LINK switch is set to the “ON” position and the AUTO/MAN (CH1) switch is set to the “MAN” position, you can adjust the audio recording level for both CH1 and CH2 using the AUDIO LEVEL (CH1) dial. When the AUTO/MAN (CH1) switch is set to the “AUTO” position, CH2 is also set to “AUTO.”
  However, the audio recording level automatic adjustment function is not linked between CH1/CH2 or between CH3/CH4. To link the operation between CH1/CH2 or between CH3/CH4, set [Audio] – [Audio Input] – [CH1&2 AGC Mode] or [CH3&4 AGC Mode] to [Stereo] in the full menu.

Related Topic

- Block Diagrams

TP1002215307

5-076-802-11(2) Copyright 2026 Sony Corporation

Interchangeable Lens Digital Camera
ILME-FX5/ILME-FX5B

Selecting the Input Audio to Output to Each Channel of the Camera using the XLR Handle Unit (ILME-FX5 only)

You can select which audio signals to output to each channel of the Multi Interface Shoe from either INPUT1, INPUT2, or INPUT3 on the XLR handle unit using the INPUT SELECT switches.

Note

- Set the number of channels to use in the menu on the camera.
- The microphone in the illustration is sold separately.

1 Set the INPUT SELECT switches.

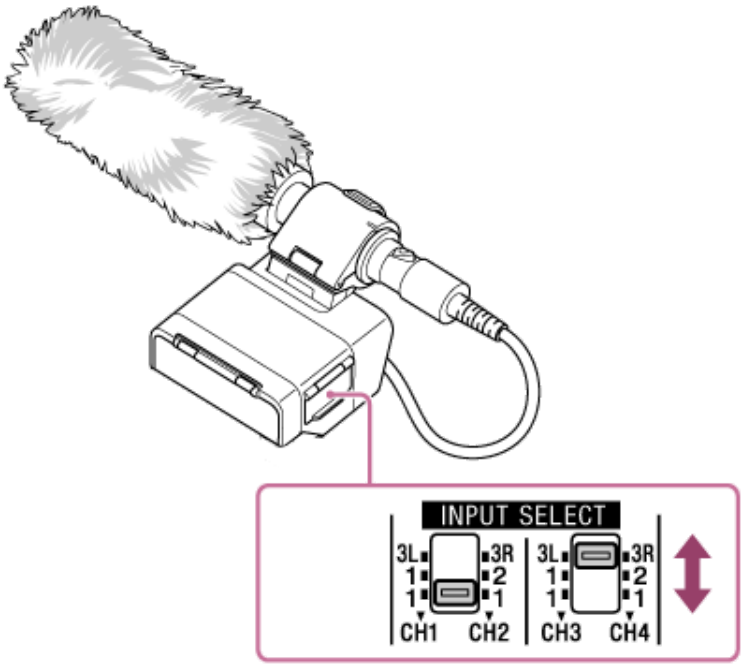

- To output to CH1 and CH2
  Set using the INPUT SELECT (CH1/CH2) switch.

Used input connectors	INPUT SELECT (CH1/CH2) switch setting	Channels to output
INPUT1 only	1/1	CH1: INPUT1 CH2: INPUT1
INPUT1, INPUT2	1/2	CH1: INPUT1 CH2: INPUT2
INPUT3	3L/3R	CH1: INPUT3L CH2: INPUT3R

- To output to CH3 and CH4
  Set using the INPUT SELECT (CH3/CH4) switch.

Used input connectors	INPUT SELECT (CH3/CH4) switch setting	Channels to output
INPUT1 only	1/1	CH3: INPUT1 CH4: INPUT1
INPUT1, INPUT2	1/2	CH3: INPUT1 CH4: INPUT2
INPUT3	3L/3R	CH3: INPUT3L CH4: INPUT3R

For details on specific connection and configuration examples, see “XLR Handle Unit (ILME-FX5 only) Inputs and Multi Interface Shoe Output Channels.”

TP1002308575

5-076-802-11(2) Copyright 2026 Sony Corporation

XLR Handle Unit (ILME-FX5 only) Inputs and Multi Interface Shoe Output Channels

This topic describes the connectors and output channel settings according to the type and number of microphones (sold separately) you used.

Using a single microphone

- **When using an XLR monaural microphone**
  Connect to the INPUT1 connector and set the INPUT SELECT (CH1/CH2) switch to the “1/1” position.
  This enables dual-mono recording to CH1 and CH2, making it suitable for audio recording for a documentary.

  You can also set the INPUT SELECT (CH3/CH4) switch to the “1/1” position to record audio with a different audio recording level than CH1 and CH2 to CH3 and CH4 as a backup.
  Set the AUTO/MAN (CH3/4) switch to the “MAN” position and adjust the audio recording level using the AUDIO LEVEL (CH3/4) dial.

- **When using an XLR (L/R) stereo microphone**
  Connect the Lch plug to the INPUT1 connector and the Rch plug to the INPUT2 connector, and set the INPUT SELECT (CH1/CH2) switch to the “1/2” position.
  This enables stereo recording to CH1 and CH2, making it suitable for audio recording of live performances and outdoor locations.

  You can also set the INPUT SELECT (CH3/CH4) switch to the “1/2” position to record audio with a different audio recording level than CH1 and CH2 to CH3 and CH4 as a backup.
  Set the AUTO/MAN (CH3/4) switch to the “MAN” position and adjust the audio recording level using the AUDIO LEVEL (CH3/4) dial.

- **When using a stereo mini plug, stereo microphone**
  Connect to the INPUT3 connector and set the INPUT SELECT (CH1/CH2) switch to the “3L/3R” position.
  This enables stereo recording to CH1 and CH2, making it suitable for audio recording of live performances and outdoor locations.

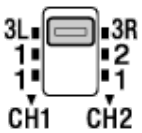

You can also set the INPUT SELECT (CH3/CH4) switch to the “3L/3R” position to record audio with a different audio recording level than CH1 and CH2 to CH3 and CH4 as a backup.
Set the AUTO/MAN (CH3/4) switch to the “MAN” position and adjust the audio recording level using the AUDIO LEVEL (CH3/4) dial.

Hint

- When using a single microphone, it is not necessary to always output audio to all four channels (CH1 to CH4). Set the number of channels to use and the INPUT SELECT switches as required.

Using multiple microphones

- **When using an XLR monaural microphone and a stereo mini plug, stereo microphone**
  Connect the monaural microphone to the INPUT1 connector and the stereo microphone to the INPUT3 connector.
  This enables recording audio of multiple microphones separately in situations, such as an interview.
  To output the monaural microphone audio to CH1 and CH2 and the stereo microphone audio to CH3 and CH4, set the INPUT SELECT (CH1/CH2) switch to the “1/1” position and the INPUT SELECT (CH3/CH4) switch to the “3L/3R” position.

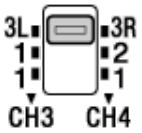

  To output the monaural microphone audio to CH3 and CH4 and the stereo microphone audio to CH1 and CH2, set the INPUT SELECT (CH1/CH2) switch to the “3L/3R” position and the INPUT SELECT (CH3/CH4) switch to the “1/1” position.

- **When using an XLR (L/R) stereo microphone and a stereo mini plug, stereo microphone**
  Connect the Lch plug of the stereo microphone to the INPUT1 connector, the Rch plug to the INPUT2 connector, and the other stereo microphone to the INPUT3 connector.
  This enables recording audio of background sound and speaker’s voices separately in situations, such as an outdoor interview.
  To output the XLR stereo microphone audio to CH1 and CH2 and the stereo mini plug, stereo microphone audio to CH3 and CH4, set the INPUT SELECT (CH1/CH2) switch to the “1/2” position and the INPUT SELECT (CH3/CH4) switch to the “3L/3R” position.

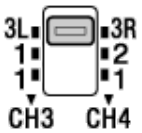

  To output the XLR stereo microphone audio to CH3 and CH4 and the stereo mini plug, stereo microphone audio to CH1 and CH2, set the INPUT SELECT (CH1/CH2) switch to the “3L/3R” position and the INPUT SELECT (CH3/CH4) switch to the “1/2” position.

Related Topic

- Setting the Audio to Record using the XLR Handle Unit (ILME-FX5 only)
- Adjusting the Audio Recording Level using the XLR Handle Unit (ILME-FX5 only)

TP1002308576

5-076-802-11(2) Copyright 2026 Sony Corporation

Interchangeable Lens Digital Camera
ILME-FX5/ILME-FX5B

Setting the Audio to Record on the Unit

You can specify the audio to be recorded using the input connectors and menu of the unit.

The Multi Interface Shoe of the unit supports a digital audio interface.
Audio recording can be performed with reduced noise interference by transmitting digital signals between the unit and the XLR handle unit or digital Multi Interface Shoe compatible accessory device.

Hint

- Using the XLR handle unit or Multi Interface Shoe compatible accessory that supports 96 kHz and 32-bit float formats, you can record high-resolution audio with high sound quality or record audio in WAV format with minimal degradation as a separate file.

Audio input connectors and menu items

Internal microphone
External microphone
Multi Interface Shoe
[CH1 Input Select]
[CH2 Input Select]
[CH3 Input Select]
[CH4 Input Select]

Menus for setting the audio recording level

[CH1 Level Control] ([Auto] / [Manual])
[CH2 Level Control] ([Auto] / [Manual])
[CH3 Level Control] ([Auto] / [Manual])
[CH4 Level Control] ([Auto] / [Manual])
[CH1 Input Level]
[CH2 Input Level]
[CH3 Input Level]
[CH4 Input Level]
[Audio Input Level]

[Audio] screen in the menu

Press the MENU button to display the menu and press [Audio] (item 4) to display the [Audio] screen.

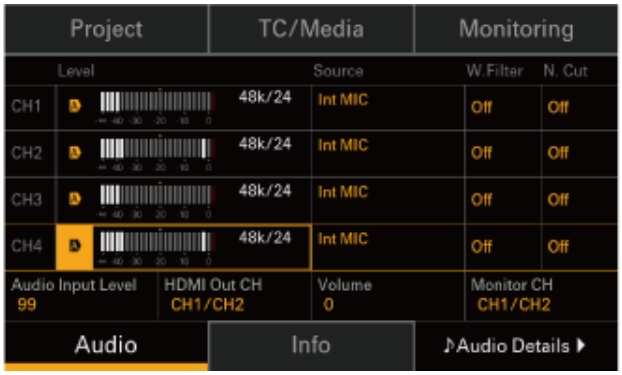

TP1002308577

5-076-802-11(2) Copyright 2026 Sony Corporation

Selecting Audio Input Devices on the Unit

You can specify the audio to be recorded using the input connectors and menu of the unit.

1. **Switch the audio input using [Audio] – [CH1 Input Select] / [CH2 Input Select] / [CH3 Input Select] / [CH4 Input Select] in the menu or [Audio] – [Audio Input] – [CH1 Input Select] / [CH2 Input Select] / [CH3 Input Select] / [CH4 Input Select] in the full menu.**

Note

- Audio is not recorded when shooting with variable frame rate.
- When [CH1 Input Select] and [CH2 Input Select] are set to [Internal MIC], the audio recording level of both CH1 and CH2 is adjusted using [CH1 Input Level]. When [CH3 Input Select] and [CH4 Input Select] are set to [Internal MIC], the audio recording level of both CH3 and CH4 is adjusted using [CH3 Input Level].
- To use an XLR handle unit, attach it to the unit and then select one of [Shoe CH1] / [Shoe CH2] / [Shoe CH3] / [Shoe CH4] according to the output setting of the handle unit.

2. **Adjust the audio recording level.**

Related Topic

- Selecting the Input Audio to Output to Each Channel of the Camera using the XLR Handle Unit (ILME-FX5 only)

TP1002308578

5-076-802-11(2) Copyright 2026 Sony Corporation

Reducing Noise using Filter Functions

Reducing noise using the wind noise reduction function

This function attenuates the low-frequency components of the audio, such as wind noise, air conditioning noise, and vibration noise.
Set [Audio] – [Audio Input] – [CH1 Filter] / [CH2 Filter] / [CH3 Filter] / [CH4 Filter] – [Wind Filter] to [On] in the full menu.

Reducing noise using the noise cut filter function

This function attenuates the operating noise of the built-in fan of the unit and other steady background noise.
Set [Audio] – [Audio Input] – [CH1 Filter] / [CH2 Filter] / [CH3 Filter] / [CH4 Filter] – [Noise Cut Filter] to [On] in the full menu.

Reducing noise using the zoom noise filter (internal microphone) function

This function attenuates the noise of the power zoom lens entering the internal microphone.
Set [Audio] – [Audio Input] – [CH1 Filter] / [CH2 Filter] / [CH3 Filter] / [CH4 Filter] – [Zoom Noise Cut(INT MIC)] to [On] in the full menu.

Note

- The zoom noise filter (internal microphone) is enabled only when [Internal MIC] is selected as the audio input.
- Using the wind noise reduction filter, noise cut filter, or zoom noise filter may alter the sound quality in comparison to normal.
- The effectiveness of the wind noise reduction filter, noise cut filter, and zoom noise filter will vary depending on the shooting conditions.
- If you change the settings of the filter functions while recording video, noise may occur when the settings switch and this noise may be recorded in the audio of the video.
- When [Headphone Live/Processed] is set to [Live], you cannot check the effects of the noise cut filter and zoom noise filter functions while monitoring the audio during shooting. The filtered audio is recorded together with the video. When streaming or during HDMI output, the filtered audio will also be transmitted/output.
- Even when [Noise Cut Filter] or [Zoom Noise Cut(INT MIC)] is set to [On], it may take some time for the noise reduction function to take effect.
  - The effectiveness of [Zoom Noise Cut(INT MIC)] in reducing the noise of a power zoom lens will vary depending on the lens being used.
  - The [Noise Cut Filter] setting is effective for the internal microphone, external microphone connector input, and analog audio input from the Multi Interface Shoe*.
    - * [Noise Cut Filter] cannot be set for some external microphones connected to the Multi Interface Shoe, even if analog transmission is enabled. In this case, use the noise cut function of the external microphone.
    - * [Noise Cut Filter] cannot be set when an external microphone connected to the Multi Interface Shoe is set to digital transmission.

Related Topic

- Basic Shooting Procedure
- Playing a Clip

TP1002308579

5-076-802-11(2) Copyright 2026 Sony Corporation

Adjusting the Audio Recording Level using the Unit

You can adjust the input audio recording level using the unit.

Adjusting the audio recording level automatically using the unit

For channels that you want to adjust automatically, set [CH1 Level Control] / [CH2 Level Control] / [CH3 Level Control] / [CH4 Level Control] to [Auto] using the [Audio] screen in the menu or using [Audio] – [Audio Input] in the full menu.

Adjusting the audio recording level manually using the unit

Use the following procedure to adjust the audio recording level for CH1/CH2/CH3/CH4 manually.
Set [CH1 Level Control] / [CH2 Level Control] / [CH3 Level Control] / [CH4 Level Control] to [Manual] using the [Audio] screen in the menu or using [Audio] – [Audio Input] in the full menu and adjust the audio recording level using [CH1 Input Level] / [CH2 Input Level] / [CH3 Input Level] / [CH4 Input Level].
You can adjust the levels for CH1 to CH4 as a group. Adjust using an assignable dial assigned with [Audio Input Level], or using [Audio Input Level] on the [Audio] screen in the menu or [Audio] – [Audio Input] in the full menu.

Hint

- The [Audio] screen in the menu is convenient for checking the audio input level.
- To automatically adjust the audio recording level of both CH1 and CH2, set [CH1&2 AGC Mode] to [Stereo]. This is used when recording the audio input on CH1 and CH2 in stereo.
- To automatically adjust the audio recording level of both CH3 and CH4, set [CH3&4 AGC Mode] to [Stereo]. This is used when recording the audio input on CH3 and CH4 in stereo.

Note

- The [Audio Input Level] setting may be disabled, depending on the combination of settings in the [Audio] menu.
- The unit supports combinations of various settings.
- For details about setting combinations, see the following topic.
  Block Diagrams

Related Topic

- Block Diagrams

TP1002308580

5-076-802-11(2) Copyright 2026 Sony Corporation

Saving Separate Audio WAV Files (when XLR handle unit is attached)

When an XLR handle unit is attached to the unit and you are recording the input from the XLR handle unit, you can simultaneously record a WAV file for editing separately from the main video on the recording media.
WAV files are recorded in 32-bit float format, which reduces noise during editing. Additionally, if the dynamics of the main 24-bit audio become compressed by limiter processing, the audio signal can be restored from the 32-bit float format WAV file.

About the recorded file

Recorded in 32-bit float format.
48kHz/96kHz setting will be the same as the main signal.
The file name extension is “.WAV” in MP4 format, and “.wav” in X-OCN format.

Storage destination of the recorded file

The recorded file is stored in the following directory.

MP4 format

Memory card	Folder path
	Normal recording
SDXC	/PRIVATE/M4ROOT/WAV
CFexpress Type A	/M4ROOT/WAV

Hint

- You can change the name of the root folder on the recording media (XAVC S files) to [M4ROOT] or [Cam ID + Reel#] using [TC/Media] – [Clip Name Format] – [XAVC S Root Folder Name] in the full menu. The example above shows the folder path when set to [M4ROOT].

X-OCN format

Memory card	Folder path
	Normal recording
SDXC	/PRIVATE/CINEROOT/Wav
CFexpress Type A	/CINEROOT/Wav

Hint

- You can change the name of the root folder to [Cam ID + Reel#] using [TC/Media] – [Clip Name Format] in the full menu.

About file names

The file name consists of the clip name recorded on the memory card + “W01” suffix.

Starting WAV recording

1. **Connect a Multi Interface Shoe compatible accessory that supports 32-bit float recording.**
2. **Select [Audio] – [Audio Input] – [CH1 Input Select] to [CH4 Input Select] – [Shoe CH1] to [Shoe CH4] in the full menu.**
3. **Set [Audio] – [32bit float WAV Rec] – [Setting] to [On] in the full menu.**

A WAV file is recorded in sync with the start and end of recording.

Hint

- WAV files can be recorded even if the main recording is in 32-bit float format.
- WAV files can be accessed from a PC or other device in mass storage mode.

Note

- The WAV recording settings cannot be changed in the following cases.
  - During recording
  - During playback
  - During thumbnail display
- Channels corresponding to WAV files are muted in the following cases.
  - When a microphone that is not 32-bit float compatible is selected as the audio input
  - When the audio format is 96kHz and a microphone that is not 96kHz compatible is selected as the audio input
- If the active slot is switched during recording, WAV recording will continue to the new card slot.
- In card slot A/B simultaneous recording mode, WAV files are recorded to both card slots.
- WAV files are not eligible for file transfer.
- [32bit float WAV Rec] – [Setting] is set to [Off] (fixed) when all the following conditions are satisfied and cannot be set to [On].
  - When [Audio] – [Audio Rec Format] – [Audio Rec Format] is set to other than [48kHz/24bit] in the full menu
  - When [Project] – [Proxy Rec] – [Setting] is set to [On] in the full menu
  - When any of the following functions is set to [On] or is operating
    - RTMP/RTMPS streaming
    - SRT streaming
- In the following recording modes, WAV recording is temporarily set to [Off].
  - When [Shooting] – [FPS] – [Fixed/Variable Select] is set to [Variable]
  - Interval recording

File save destination and linked operations

WAV files are saved in the same card slot as the video file in a specific directory level.
In addition, video files and WAV files are linked as follows.

- If you delete a video file, the corresponding WAV file will also be deleted.
- If you lock a video file, the corresponding WAV file will also be locked.

TP1002295527

5-076-802-11(2) Copyright 2026 Sony Corporation

Direct Menu

You can check the status and settings of the unit displayed on the shooting screen, and directly select and change settings.
The following items can be configured.

- [Subject Recognition AF]
- [SteadyShot]
- [White Balance Mode]
- [Color Temp]
- [Scene File]
- [Auto Iris]
- Iris value
- [AGC]
- ISO value
- Gain value
- [Exposure Index] value
- [Base ISO/Sensitivity]
- [Tint]
- [Auto Shutter]
- Shutter value
- [Auto Exposure Mode]
- [Auto Exposure Level]
- Shooting frame rate

1. **Press the multi-function dial or an assignable button assigned with [Direct Menu].**
   Only the items on the screen that can be configured using the direct menu are selectable using the orange cursor.

2. **Turn the multi-function dial to move the cursor to the menu item to operate, then press the multi-function dial.**
   A menu is displayed or the item is displayed on a white background.

3. **Turn the multi-function dial to select a setting, then press the multi-function dial.**
   The menu or white background disappears and the new setting is displayed with an orange cursor.
   Press an assignable button assigned with [Direct Menu] again or wait 3 seconds without performing any action to exit the direct menu.

Hint

- Direct settings can also be configured by pressing or pressing-and-holding each of the function buttons.
- When items are displayed on a white background, the multi-function dial can be used like an assignable dial.
- The multi selector can also be used for selection operations.
- The direct menu does not support touch operation.
- To use direct menu operation on the shooting screen in information display mode in the same way as in video monitoring mode, set [Technical] – [Menu Settings] – [Info. Disp. Mode Operation] to [Direct Menu Priority] in the full menu.

TP1002215310

5-076-802-11(2) Copyright 2026 Sony Corporation

Assignable Buttons

There are 9 assignable buttons on the unit to which you can assign functions. You can also assign functions to [<User 1>] to [<User 6>] on the user functions screen.

Changing the button function

Set using [Project] – [Assignable Button] in the full menu.

Functions assigned to each assignable button by factory default

Assignable button	Function
Assignable button 1	[Iris]
Assignable button 2	[White Balance]
Assignable button 3	[ISO/Gain]
Assignable button 4	[False Color]
Assignable button 5	[LCD/VF Focus Mag]
Assignable button 6	[Rec]
VF/LCD toggle button	[VF/LCD]
Focus hold button	[Focus Hold]
Grab button	[Off]
Grab button (half press)	[Single-shot AF(AF-S)]
[<User 1>]	[Peaking]
[<User 2>]	[Display]
[<User 3>]	[SteadyShot]
[<User 4>]	[Focus Operation]
[<User 5>]	[Slot Select]
[<User 6>]	[Video Signal Monitor]

Hint

- The VF/LCD toggle button is located on the left side of the viewfinder (sold separately).
- You can also assign functions to the focus hold button of the lens. However, note that some lenses do not have a focus hold button.

Assignable functions

- [Off]
- [Base ISO/Sensitivity]
- [ISO/Gain][1)]
- [AGC]
- [Push AGC]
- [Iris][1)]

- [Auto Iris]
- [Push Auto Iris]
- [Shutter][1)]
- [Auto Shutter]
- [AE Level/Mode][1)]
- [Backlight]
- [Spotlight]
- [Set to Preset Val.(Wht)]
- [White Balance][1)]
- [Auto White Balance]
- [ATW]
- [ATW Hold]
- [Focus Operation]
- [AF Speed/Sens.][1)]
- [Focus Setting][1)]
- [AF Transition Speed][2)]
- [AF Subj. Shift Sens.][2)]
- [Subject Recognition AF]
- [Single-shot AF(AF-S)][1)]
- [Push AF/Push MF]
- [Focus Hold]
- [LCD/VF Focus Mag][1)]
- [HDMI Focus Mag][1)]
- [FPS]
- [LUT On/Off 1]
- [LUT On/Off 2]
- [LUT On/Off 3]
- [Press & H Log 1][2)]
- [Press & H Log 2][2)]
- [Press & H Log 3][2)]
- [SteadyShot]
- [De-Squeeze Ratio][2)]
- [Rec][1)]
- [Rec Review]
- [Shot Mark1]
- [Shot Mark2]
- [Clip Flag OK]
- [Clip Flag NG]
- [Clip Flag Keep]
- [Slot Select]
- [Color Bars]
- [Tally [Front]]
- [CALL]
- [DURATION/TC/U-BIT]
- [Format Media(A)][2)]
- [Format Media(B)][2)]
- [Display]
- [Output Display HDMI][2)]
- [Lens Info]
- [Video Signal Monitor]
- [Frame Line]
- [LCD Monitor Brightness][2)]
- [VF Brightness][2)]
- [LCD/VF Adjust][1)]
- [VF/LCD][1)]
- [Gamma Display Assist]
- [Focus Map]
- [Peaking]

- [Zebra]
- [False Color]
- [Volume]
- [Clips]
- [Touch Operation]
- [Clear Image Zoom][2)]
- [Fan Control][2)]
- [Auto Pixel Restoration][2)]
- [Zoom Type][1)]
- [Stream]
- [Auto Upload (Proxy)]
- [Enlarge Screen][1)]
- [Direct Menu][1)]
- [Home][1)]
- [Menu][1)]

1) Cannot be assigned to [<User 1>] to [<User 6>].
2) Cannot be assigned to assignable button 1 to assignable button 6, VF/LCD toggle button, or focus hold button.

Hint

- Only the following functions can be assigned to the grab button.
  - [Off]
  - [Rec]
  - [Shot Mark1]
  - [Shot Mark2]
- Only the following functions can be assigned to the grab button (half-press) when [Off] is assigned to the grab button.
  - [Off]
  - [Single-shot AF(AF-S)]

TP1002215311

5-076-802-11(2) Copyright 2026 Sony Corporation

Assignable Dial

You can change the function of the assignable dial.

Assign a function to the assignable dial using [Project] – [Assignable Dial] – [Assignable Dial] in the full menu.

Setting	Description
[Off]	Disables assignable dial operation.
[ISO/Gain/EI]	Adjusts the ISO/gain/EI.
[IRIS] (default value)	Adjusts the iris.
[Auto Exposure Level]	Adjusts the auto exposure level.
[Audio Input Level]	Adjusts the audio recording level.
[Multi Function Dial]	Functions as a multi-function dial.

TP1002295528

5-076-802-11(2) Copyright 2026 Sony Corporation

Multi-Function Dial

You can change the function of the multi-function dial of the unit.

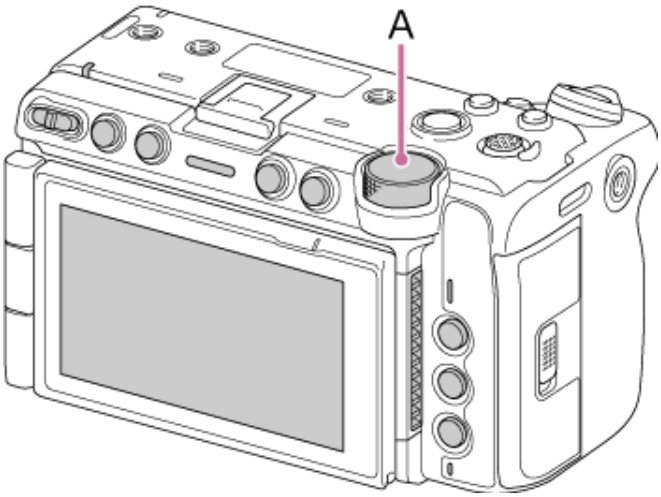

A: Multi-function dial
Assign a function to the multi-function dial using [Project] – [Multi Function Dial] – [Default Function] in the full menu.

Setting	Description
[Off]	Disables the multi-function dial operation.
[ISO/Gain/EI] (default value)	Adjusts the gain.
[IRIS]	Adjusts the iris.
[Auto Exposure Level]	Adjusts the auto exposure level.
[Audio Input Level]	Adjusts the audio recording level.

Note

- The setting is disabled while the menu is displayed.

TP1002218816

5-076-802-11(2) Copyright 2026 Sony Corporation

Selecting Fixed/Variable Frame Rate (Slow & Quick Motion)

You can shoot video in slow motion/quick motion by setting the shooting frame rate and project frame rate to different frame rates. When the recording format is set to the following values, you can specify different values for the shooting frame rate and playback frame rate.

MP4 format

Recording format			Frame rate
Project frame rate	Codec	Video format	
59.94/50/23.98	XAVC S-I	4096×2160P	1-60, 66, 72, 75, 88, 90, 96, 100, 110, 120
	XAVC HS-L 422 / XAVC HS-L 420 / XAVC S-I / XAVC S-L 422 / XAVC S-L 420	3840×2160P	1-60, 66, 72, 75, 88, 90, 96, 100, 110, 120
	XAVC S-I / XAVC S-L 422 / XAVC S-L 420	1920×1080P	1-60, 66, 72, 75, 88, 90, 96, 100, 110, 120, 150, 180, 200, 240
29.97/25	XAVC S-I	4096×2160P	1-60, 66, 72, 75, 88, 90, 96, 100, 110, 120
	XAVC S-I / XAVC S-L 422 / XAVC S-L 420	3840×2160P	1-60, 66, 72, 75, 88, 90, 96, 100, 110, 120
	XAVC S-I / XAVC S-L 422 / XAVC S-L 420	1920×1080P	1-60, 66, 72, 75, 88, 90, 96, 100, 110, 120, 150, 180, 200, 240
24	XAVC S-I	4096×2160P	1-60, 66, 72, 75, 88, 90, 96, 100, 110, 120

You can also assign [FPS] to an assignable button and press the button to switch between shooting with fixed frame rate and variable frame rate.
You can set the frame rate for shooting by pressing and holding the button.

Note

- During recording, playback, and thumbnail display, [Shooting] – [FPS] – [Fixed/Variable Select] cannot be set to [Variable] in the full menu.
- When [Shooting] – [FPS] – [Fixed/Variable Select] is set to [Variable] in the full menu, audio cannot be recorded.
- When [Shooting] – [FPS] – [Fixed/Variable Select] is set to [Variable] in the full menu, auto shutter is disabled.

TP1002215312

5-076-802-11(2) Copyright 2026 Sony Corporation

Interchangeable Lens Digital Camera
ILME-FX5/ILME-FX5B

Recording Video Intermittently (Interval Rec)

The Interval Rec function allows you to capture video at regular intervals to internal memory of the unit. This function is an effective way to shoot slow-moving subjects. When you start recording, the unit automatically records a specified number of frames ([Number of Frames]) at a specified interval time ([Interval Time]).

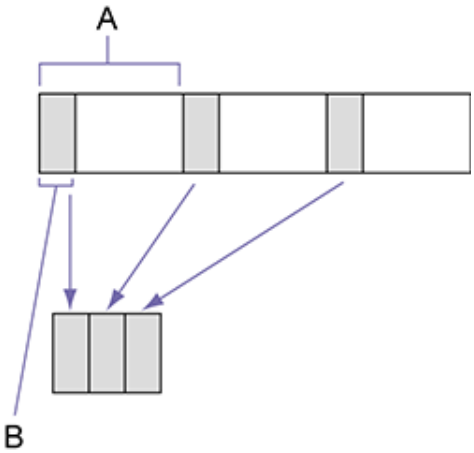

A: Shooting interval ([Interval Time])
B: Number of frames recorded per take ([Number of Frames])

Note

- Configurable only when [Codec] is set to a codec other than X-OCN.
- Only one special recording function, such as Interval Rec, can be used at any one time.
- If another special recording function is enabled while Interval Rec is in use, Interval Rec is automatically released.
- Interval Rec mode is automatically released after changing system settings, such as the video format.
- Interval Rec settings cannot be changed during recording or playback, or when the clip list screen is displayed.

To set Interval Rec

Set [Project] – [Interval Rec] – [Setting] to [On] in the full menu.
When the unit is turned off, Interval Rec mode is released, but the [Number of Frames] and [Interval Time] settings are retained. You do not need to set them again the next time you shoot in Interval Rec mode.

To shoot using Interval Rec

Press the record START/STOP button to start recording. “Int ●Rec” and “Int ●Stby” appear alternately in the viewfinder.

To stop shooting

Stop the recording.
When shooting ends, the video data stored in memory up to that point is written to the media.

To exit Interval Rec mode

Set [Project] – [Interval Rec] – [Setting] to [Off] in the full menu. Or turn the unit off.

Limitations during recording

- Audio is not recorded.
- Reviewing the recording (Rec Review) is not possible.

If the unit is turned off

- If the power of the unit is turned off, the media is accessed to record the images stored in memory up till that moment, and then the power turns off automatically.
- If power is lost because the battery was removed, the DC power cord was disconnected, or the power was turned off from the AC adaptor, then the video and audio data shot up to that point may be lost (maximum 10 seconds). Care should be exercised when exchanging the battery.

TP1002218819

5-076-802-11(2) Copyright 2026 Sony Corporation

False Color

False color is a function that applies colors to the monitor output image according to the luminance level, making it easier to view the exposure when shooting.
To use the false color function, set [Technical] – [Exposure Assist] – [False Color] to [On] in the full menu. You can also assign [False Color] to an assignable button and press the button to turn the false color function on/off.

Note

- False Color applies colors to the luminance levels in the S-Log3 video output with [LUT] set to [Off] (EI gain is also not applied), regardless of the LUT application settings.
- [False Color] is set to [Off] (fixed) when any of the following conditions is satisfied and cannot be set to [On].
  - When [Technical] – [Test Signals] – [Color Bars] is set to [On] in the full menu
  - When the shooting mode is set to [Custom]
  - During recording (including at the start of recording if the false color display is on)
  - When recording externally (HDMI output recording, RAW output recording)
  - When switching to a screen that does not display false color
  - When the streaming function is set to [On]
- When the shooting mode is changed, [False Color] is set to [Off].
- If any of the following are performed when [False Color] is set to [On], the setting is changed to [Off].
  - Focus magnification
  - Focus map display

Setting the destination for false color

Set the false color output destination using [Technical] – [Exposure Assist] – [Output Target] in the full menu.

Setting	Description
[LCD Monitor/VF]	Displayed on the LCD monitor and viewfinder.
[HDMI]	Output to HDMI.

Hint

- Either or both can be selected.

Showing/hiding the color scale

You can show/hide the color scale for false color when the false color function is enabled using [Technical] – [Exposure Assist] – [Color Scale] in the full menu.

Note

- The color scale for false color cannot be displayed when the LCD monitor is in information display mode.
- The color scale for false color is displayed on the LCD monitor, viewfinder, and HDMI output, regardless of the [Technical] – [Exposure Assist] – [Output Target] setting in the full menu.

TP1002295529

5-076-802-11(2) Copyright 2026 Sony Corporation

Recording to Both Memory Cards A and B

You can record to both memory card A and memory card B simultaneously by setting [Project] – [Simul Rec] – [Setting] to [On] in the full menu.

Note

- Simultaneous recording in X-OCN is not supported.

About file names

In card slot A/B simultaneous recording when [Auto Naming] is set to [Title], the generated clip will have the same clip name on both media. When set to [Cam ID + Reel#], the generated clips will be identical except for the last two characters.

Related Topic

- Top Side
- Rear Side

TP1002215314

5-076-802-11(2) Copyright 2026 Sony Corporation

Interchangeable Lens Digital Camera
ILME-FX5/ILME-FX5B

Video Signal Monitor

You can set the type of video signal to display on the shooting screen to waveform, vectorscope, or histogram using [Monitoring] – [Display On/Off] – [Video Signal Monitor] in the full menu.
The orange line indicates the set value of the zebra level.
The same operation is supported using an assignable button assigned with [Video Signal Monitor].

Monitor target display

In log shooting mode, “Look” is displayed at the top right of the video signal monitor when a LUT is applied to indicate the monitor target. “SG3/SLog3” or “SG3C/SLog3” is displayed when a LUT is not applied.

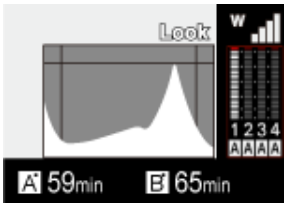

TP1002215315

5-076-802-11(2) Copyright 2026 Sony Corporation

Gamma Display Assist Function

In custom shooting mode when [Project] – [Base Setting] – [Target Display] is set to [HDR(HLG)] in the full menu, you can set [Monitoring] – [Gamma Display Assist] – [Setting] to [On] in the full menu to view an assisted display image on the shooting screen that makes shooting in HDR easier.

Viewfinder display when [Monitoring] – [VF Setting] – [VF Image in HDR] is set to [HDR] in the full menu

When [Project] – [HDR Setting] – [LCD/VF SDR Preview] is set to [Off] in the full menu, the viewfinder display will show the HDR video signal when shooting in HDR.
When [Project] – [HDR Setting] – [LCD/VF SDR Preview] is set to [On] in the full menu, the display is the same as the LCD monitor below.

Viewfinder display when [Monitoring] – [VF Setting] – [VF Image in HDR] is set to [SDR(LCD Like)] in the full menu

The display is the same as the LCD monitor below.

Selecting the LCD monitor/viewfinder display when the gamma display assist function is enabled

There are two display methods supported for displaying HDR images on the LCD monitor/viewfinder when the gamma display assist function is enabled.
Displaying HDR with maintained contrast between low luminance areas and high luminance areas
Images can be displayed on the LCD monitor/viewfinder without crushed blacks or blown-out highlights by taking advantage of the expressiveness of HDR, even when shooting with bright or dark exposure. However, the contrast is slightly reduced.
To use this display method, set [Project] – [HDR Setting] – [LCD/VF SDR Preview] to [Off] in the full menu.
Displaying SDR by simple conversion from HDR to SDR
This method allows you to operate the camera with the same feeling as conventional SDR.
You can adjust the brightness of the HDR image by setting the difference in gain between HDR and SDR using [SDR Gain].
To use this display method, configure using the following procedure.

1. **Set [Project] – [HDR Setting] – [LCD/VF SDR Preview] to [On] in the full menu.**
2. **Adjust the SDR gain value for HDR mode using [Project] – [HDR Setting] – [SDR Gain] in the full menu.**

Hint

- When converting from an HDR image to SDR using SR Live Metadata after shooting, [SDR Gain] is applied to the conversion so that the SDR image display has the same exposure that was viewed in the viewfinder at the time of shooting.

[Target Display]	[VF Image in HDR]	[LCD/VF SDR Preview]	[Gamma Display Assist]	Video indicator	
				LCD	VF
[SDR(BT.709)]	–	–	–	SDR video	

<table>
<tr><th rowspan="2">[Target Display]</th><th rowspan="2">[VF Image in HDR]</th><th rowspan="2">[LCD/VF SDR Preview]</th><th rowspan="2">[Gamma Display Assist]</th><th colspan="2">Video indicator</th></tr>
<tr><th>LCD</th><th>VF</th></tr>
<tr><td rowspan="7">[HDR(HLG)]</td><td rowspan="4">[HDR]</td><td rowspan="2">[Off]</td><td>[Off]</td><td>Video of HDR signal displayed as-is on an SDR monitor</td><td rowspan="2">HDR video</td></tr>
<tr><td>[On]</td><td>HDR video that maintains contrast in both low-luminance and high-luminance areas</td></tr>
<tr><td rowspan="2">[On]</td><td>[Off]</td><td>Video of HDR signal displayed as-is on an SDR monitor</td><td rowspan="2">Video converted from HDR to SDR using simple conversion</td></tr>
<tr><td>[On]</td><td>Video converted from HDR to SDR using simple conversion</td></tr>
<tr><td rowspan="3">[SDR(LCD Like)]</td><td rowspan="2">[Off]</td><td>[Off]</td><td colspan="2">Video of HDR signal displayed as-is on an SDR monitor</td></tr>
<tr><td>[On]</td><td colspan="2">HDR video that maintains contrast in both low-luminance and high-luminance areas</td></tr>
<tr><td rowspan="2">[On]</td><td>[Off]</td><td colspan="2">Video of HDR signal displayed as-is on an SDR monitor</td></tr>
<tr><td>[On]</td><td colspan="2">Video converted from HDR to SDR using simple conversion</td></tr>
</table>

TP1002215316

5-076-802-11(2) Copyright 2026 Sony Corporation

Clip Flags

You can add an [OK] clip flag to a clip being recorded or just recorded by pressing an assignable button assigned with [Clip Flag OK] and selecting [Add OK]. You can also add a clip flag to a clip during playback.
You can delete an [OK] clip flag by pressing the button twice to execute [Delete Clip Flag].

Hint

- You can also add a clip flag using [Clip Operations] – [Set Clip Flag] in the full menu.
- The clip list screen can be displayed sorted by clip flag type (filtered clip list screen). For details, see the following topic.
  Clip Operations
- You can also assign [Clip Flag OK] to [User 1] to [User 6] on the user functions screen.

TP1002215317

5-076-802-11(2) Copyright 2026 Sony Corporation

Breathing Compensation

You can set whether to perform breathing compensation for an E-mount lens using [Technical] – [Lens] – [Breathing Compensation] in the full menu.

This function corrects for the phenomenon in which changes in the angle of view occur as the focus position varies.
When breathing compensation is executed, a portion of the image is electronically cropped to maintain a constant angle of view so that the breathing phenomenon does not appear.

Note

- When breathing compensation is enabled, the angle of view and image quality may change slightly.
- Depending on the lens, it may not be possible to correct the change in the angle of view when breathing compensation is enabled.
- Compensation is not possible when a lens that does not support breathing compensation is attached.
- This function is set to Off (fixed) in the following cases.
  - When [Technical] – [Lens] – [Distortion Comp.] is set to [Off]
  - When [Shooting] – [FPS] – [Fixed/Variable Select] is set to [Variable] and [FPS Select] is set to 66 fps or higher in the full menu
  - When [Project] – [Rec Format] – [Codec] is set to [X-OCN LT] / [X-OCN C1] / [X-OCN C2]
  - When [Project] – [Rec Format] – [Project Frame Rate] is set to 100 or 120

TP1002295530

5-076-802-11(2) Copyright 2026 Sony Corporation

Distortion Compensation

X-OCN clips recorded by the unit do not have lens distortion compensation applied. However, if you are using a Sony or licensed partner E-mount lens, the metadata required for lens distortion compensation is retained within the clip. You can then perform lens distortion compensation in X-OCN clips using Catalyst Browse, Catalyst Prepare, or Catalyst Prepare Plugin.

- For details about the recommended workflow and method for applying lens distortion compensation using Catalyst Browse, Catalyst Prepare, or Catalyst Prepare Plugin, visit the following website. Contact the software provider regarding compatibility with other editing software.
  URL: https://www.sony.net/di/x-ocn_distortion_comp_method/
- Lens distortion compensation is applied to the image displayed on the LCD monitor and the HDMI output image when shooting with the unit. Accordingly, there may be differences in appearance between the image during shooting and the image when previewing an X-OCN clip. For details about lens distortion compensation in Sony and licensed partner E-mount lenses when recording in X-OCN, visit the following website.
  URL: https://www.sony.net/di/x-ocn_distortion_comp/
- Support for lens distortion compensation in clip previews when using a Sony or licensed partner E-mount lens is planned in a future update. For details about licensed partners, visit the following website.
  URL: https://support.d-imaging.sony.co.jp/www/e_mount/licensee/

TP1002495097

5-076-802-11(2) Copyright 2026 Sony Corporation

Configuring De-Squeeze Display

When producing Cinemascope-sized video content, use an anamorphic lens for shooting.
You can output an image with the same aspect ratio as when viewing a subject directly, either via HDMI output or display on the LCD monitor/viewfinder, by adjusting the de-squeeze display setting to match the magnification of the anamorphic lens being used
Set the de-squeeze display ratio using [Project] – [Anamo. De-Squeeze] in the menu.

Hint

- The de-squeeze display ratio can also be configured using [Project] – [Anamo. De-Squeeze] – [Ratio] in the full menu.

Note

- For RAW output and SD signal output, the HDMI output video is not displayed de-squeezed.
- Auto focus cannot be used when set to any value other than [Off(1.0x)].

TP1002326219

5-076-802-11(2) Copyright 2026 Sony Corporation

Setting the Clock Automatically

You can synchronize the clock of the unit with the clock of mobile device connected via Bluetooth by linking with the “Creators' App for Enterprise” application.

1. **Install the “Creators' App for Enterprise” application on the smartphone.**

2. **Connect the unit and the smartphone via Bluetooth.**
   Execute [Network] – [Bluetooth] – [Pairing] in the full menu and follow the on-screen instructions.
   For details, refer to the “Creators' App for Enterprise” Help Guide.

3. **Set [Maintenance] – [Clock Set] – [Auto Date/Time Correction] to [On] in the full menu to synchronize the time, and [Clock Set] – [Auto Time Zone Correction] to [On] to synchronize the time zone.**
   When using this function, it is recommended that both settings be set to [On].

Hint

- If the unit does not respond correctly, check the following and pair the devices again.
  - Check that the unit is not connected via Bluetooth to another device.
  - Execute [Network] – [Network Reset] – [Reset] in the full menu.

Note

- If you link time information with “Creators' App for Enterprise” and then set the time or time zone using the menu of the unit, the time recorded in the clip may be incorrect.
- If “UTC *” is displayed in the setting field of [Clock Set] – [Time Zone], setting the time or time zone manually will cause the time to be incorrect. Turning the unit off and on again and enabling the location and time information link function will update the unit to the correct information. Wait until “UTC *” is displayed again.
- When the unit is initialized, the pairing information is cleared. Delete the pairing information from your smartphone and pair the devices again.
- If Bluetooth communication is unstable, make sure there are no obstacles, such as other persons or metallic objects, between the unit and the smartphone.
- If high-volume communication is in progress, such as streaming using the wireless LAN 2.4 GHz band, the operation may become unstable. For high-volume communication, consider using a wired LAN connection.
- When making a Bluetooth connection, only pair with devices you trust. Avoid random pairing requests or connections to unknown devices.
- When not using the Bluetooth function, turn the Bluetooth function off.
- Check the list of paired devices regularly and remove any unnecessary devices.
- If you delete the pairing information for the unit from your smartphone, delete the smartphone pairing information from [Bluetooth] – [Manage Paired Device].

TP1002308026

5-076-802-11(2) Copyright 2026 Sony Corporation

Recording Location Data

Location data obtained from a smartphone can be recorded in clips by connecting the unit to the “Creators' App for Enterprise” smartphone app via Bluetooth.

1. **Install the “Creators' App for Enterprise” application on the smartphone.**
2. **Set [Technical] – [GPS] – [Location by Mobile App] to [On] in the full menu.**
3. **If not paired with a smartphone using Bluetooth, execute [Network] – [Bluetooth] – [Pairing] in the full menu.**
4. **Launch “Creators' App for Enterprise” on the smartphone.**
   Then, follow the instructions on the “Creators' App for Enterprise” screen.
   For details, refer to the “Creators' App for Enterprise” Help Guide.

Hint

- If the unit does not respond correctly, check the following and pair the devices again.
  - Check that the unit is not connected via Bluetooth to another device.
  - Cancel the pairing with all devices using [Network] – [Bluetooth] – [Manage Paired Device] in the full menu.
  - On the smartphone, delete all the pairing information related to the unit.
  - If the problem persists, execute [Network] – [Network Reset] – [Reset] in the full menu.

Note

- When the unit is Bluetooth paired with multiple smartphones, the location is obtained from the first instance of “Creators' App for Enterprise” that is found. Check that the connected smartphone is the intended one. Cancel the pairing for devices you are not using, as required.
- The location data update frequency follows the “Creators' App for Enterprise” specifications. For details, refer to the “Creators' App for Enterprise” Help Guide.
- If you publish or share videos shot with the unit on the Internet while location data is linked using the “Creators' App for Enterprise,” the shooting location may be unintentionally made known to third parties. To avoid this issue, set [Technical] – [GPS] – [Location by Mobile App] to [Off] in the full menu of the unit before shooting.
- When the unit is initialized, the pairing information is cleared. Delete the pairing information from your smartphone and pair the devices again.
- If Bluetooth communication is unstable, make sure there are no obstacles, such as other persons or metallic objects, between the unit and the smartphone.
- If large volume communication is in progress, such as when streaming using the wireless LAN 2.4 GHz band, the Bluetooth function operation may become unstable. For high-volume communication, consider using a wired LAN connection.
- When making a Bluetooth connection, only pair with devices you trust. Avoid random pairing requests or connections to unknown devices.
- When not using the Bluetooth function, turn the Bluetooth function off.
- Check the list of paired devices regularly and remove any unnecessary devices.
- If you delete the pairing information for the camera from your smartphone, delete the smartphone pairing information from [Bluetooth] – [Manage Paired Device].

Related Topic

- Network Functions

TP1002308027

5-076-802-11(2) Copyright 2026 Sony Corporation

Proxy Recording

This function allows you to simultaneously record a low-resolution proxy clip at the same time as recording a high-resolution original clip when recording to a memory card.
For details about supported memory cards, formatting memory cards, and checking the remaining capacity, see the following topics.
Recommended Memory Cards
Initializing Memory Cards
Checking the Remaining Recording Time

About the recorded file

The file name extension is “.MP4” in MP4 format, and “.mp4” in X-OCN format.
The timecode is also recorded simultaneously.

Storage destination of the recorded file

The recorded file is stored in the following directory.

MP4 format

Memory card	Folder path
SDXC	/PRIVATE/M4ROOT/SUB
CFexpress Type A	/M4ROOT/SUB

Hint

- You can change the name of the root folder on the recording media (XAVC S files) to [M4ROOT] or [Cam ID + Reel#] using [TC/Media] – [Clip Name Format] – [XAVC S Root Folder Name] in the full menu. The example above shows the folder path when set to [M4ROOT].

X-OCN format

Memory card	Folder path
SDXC	/PRIVATE/CINEROOT/Sub
CFexpress Type A	/CINEROOT/Sub

Hint

- You can change the name of the root folder to [Cam ID + Reel#] using [TC/Media] – [Clip Name Format] in the full menu.

About file names

The file name consists of the clip name recorded on the memory card + “S03” suffix.

Recording a proxy

Shoot with proxy recording using the following procedure.

1. **Set [Project] – [Proxy Rec] – [Setting] to [On] in the full menu.**
2. **Insert a memory card into a card slot.**

   - For CFexpress cards, the label faces toward the LCD monitor side.

- For SD cards, the contacts face toward the LCD monitor side with the beveled corner at the bottom.

3. **Press the record START/STOP button.**
   Proxy recording starts.

Note

- If the unit is turned off or the memory card is removed while the memory card is being accessed, the integrity of data on the card cannot be guaranteed. All data recorded on the memory card may be discarded. Always make sure the memory card access lamp is off before turning off the unit or removing the memory card.
- Make sure that the memory card does not pop out when inserting or removing it.

To stop shooting

Stop the recording.

To set the audio channel for proxy recording

Set the audio channel for proxy data recording using [Project] – [Proxy Rec] – [Audio Channel] in the full menu.

TP1002215318

5-076-802-11(2) Copyright 2026 Sony Corporation

Selecting a Look

In [Custom] shooting mode, you can add adjustments to the black, matrix, and other parameters to create a “look” based on the base look.

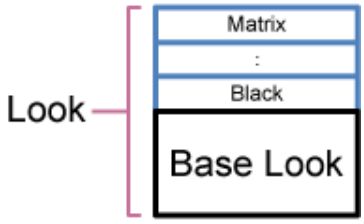

You can also quickly select a different look by saving different combinations of settings in scene files.
The unit is provided with a total of six preset looks.

1. **With the shooting screen displayed, press the multi-function dial.**
2. **Select the SCN (scene file) icon.**
3. **Press the multi-function dial.**
4. **Select the desired look from the menu, and press the multi-function dial.**

Hint

- The following presets are configured by factory default.

[Shooting Mode]	[Custom]	
[Target Display]	[SDR(BT.709)]	[HDR(HLG)]
Scene file 1	[S-Cinetone]	[HLG Live]
Scene file 2	[ITU709]	[HLG Natural]
Scene file 3	[709tone]	(Not registered)
Scene file 4	(Not registered)	(Not registered)
Scene files 5 to 16	(Not registered)	(Not registered)

- You can also select a look using [Paint/Look] – [Scene File] – [Recall Internal Memory] in the full menu. You can also recall a preset look using [Scene File] – [Preset Recall].

TP1002215320

5-076-802-11(2) Copyright 2026 Sony Corporation

Importing a Desired Base Look

You can import up to 16 3D LUT files, created on a computer or other device, as a base look from a memory card.

- File format: CUBE file (*.cube) for a 17-grid or 33-grid 3D LUT created using Catalyst Browse or RAW Viewer
- Input color gamut/Gamma: S-Gamut3.Cine/S-Log3 or S-Gamut3/S-Log3

Importing from a memory card

You can import a 3D LUT file from a memory card.

1. **On the computer or other device, save the 3D LUT file in the specified folder on the memory card.**

Memory card	Folder path
SDXC	/PRIVATE/SONY/PRO/LUT/
CFexpress Type A	/SONY/PRO/LUT/

2. **Insert a memory card on which a 3D LUT file is saved into card slot B.**
3. **Execute [Paint/Look] – [Base Look] – [Import from Media(B)] in the full menu.**
4. **Select an import destination.**
5. **Select a 3D LUT file to import.**
   Follow the on-screen instructions. The unit handles a 3D LUT file as a base look.
6. **Select the imported 3D LUT file using [Paint/Look] – [Base Look] – [Select] in the full menu.**
7. **Set [Paint/Look] – [Base Look] – [Input] and [Output] in the full menu to match the attributes of the imported 3D LUT file.**

Adjusting for underexposure

If there is a tendency for underexposure when auto exposure is selected when using an imported base look, adjust [Paint/Look] – [Base Look] – [AE Level Offset] in the full menu.

Note

- Just importing a 3D LUT file does not affect the image. Load the imported 3D LUT file using [Paint/Look] – [Base Look] – [Select] in the full menu.
- If [Input] is not set correctly, the proper look will not be obtained.
- The [Input] / [Output] / [AE Level Offset] menu item settings are applied to the base look selected using [Select]. If multiple 3D LUT files are imported, select [Select] for each 3D LUT file, and configure [Input] / [Output] / [AE Level Offset] individually for each file.
- The configured [Input] / [Output] / [AE Level Offset] settings are saved for each 3D LUT file.
- The base look/LUT selection options for imported 3D LUT files are common to [SDR(BT.709)] / [HDR(HLG)] / log shooting mode, but color gamut and gamma conversion are not performed according to these modes.
- Imported 3D LUT files are not deleted when [Maintenance] – [All Reset] – [Reset] is executed in the full menu.
- The file size of a 33-grid CUBE file to be imported is estimated to be approximately 1 MB. CUBE files exceeding this size cannot be imported.
  Depending on the file size, even if a file can be imported, it may not be possible to save the original CUBE file in the non-volatile memory of the unit. In this case, metadata recording for the 3D LUT file will not be possible, even if [Project] – [Base Setting] – [Cine EI/Flexible ISO Setting] – [Embed LUT File] is set to [On] in the full menu.
  A [!] icon will be displayed in front of the name of these base looks in the list of base looks.
- If a scene file uses a user base look and the original Cube data for the user base look is not saved on the camera, the scene file cannot be saved to a memory card. In this case, a [!] icon will be displayed in front of the scene file name in the scene file list.

- The initial values (such as ISO sensitivity) may vary depending on the look. When changing the look, double-check that the settings are as intended.

TP1002215321

5-076-802-11(2) Copyright 2026 Sony Corporation

Deleting a Base Look

You can select and delete an imported 3D LUT file using [Paint/Look] – [Base Look] – [Delete] in the full menu.
You can delete all imported 3D LUT files using [Paint/Look] – [Base Look] – [Delete All] in the full menu.

Note

- Before deleting, check that the base look is not being used in any scene files. If a base look that is being used is deleted, the look of the corresponding scene files will be incorrect.
- Imported 3D LUT files are not deleted when [Maintenance] – [All Reset] – [Reset] is executed in the full menu.
- A deleted base look can no longer be used as a LUT in log shooting mode.

TP1002215324

5-076-802-11(2) Copyright 2026 Sony Corporation

Customizing a Look

You can customize a look based on the base look using [Paint/Look] – [Matrix] and other setup items in the full menu.
Connect your unit to a TV or monitor, and adjust the picture quality while observing the picture on the TV or monitor screen.

Note

- When you import a 3D LUT file and apply it to the image, the desired look defined in the 3D LUT file will not be obtained if [Paint/Look] – [Matrix] and other settings in the full menu, other than the base look, are changed. You can reset all customized settings using [Paint/Look] – [Reset Paint Settings] – [Reset without Base Look] in the full menu.

TP1002215322

5-076-802-11(2) Copyright 2026 Sony Corporation

Storing a Look as a Scene File

You can save the current look as a scene file in internal memory using [Paint/Look] – [Scene File] – [Store Internal Memory] in the full menu.
You can then quickly recall the look using operations in the direct menu from the shooting screen.

Hint

- You can overwrite the preset scene files.
- To restore a preset scene file, load the look to be restored using [Paint/Look] – [Scene File] – [Preset Recall] in the full menu, and then save the scene file using [Scene File] – [Store Internal Memory].

Note

- If you select another look without saving the current look, the current look is discarded.
- Scene files are not deleted when [Maintenance] – [All Reset] – [Reset] is executed in the full menu.

Deleting a saved look

You can delete a scene file saved in internal memory using [Paint/Look] – [Scene File] – [Delete Internal Memory] in the full menu.

Hint

- When deleted, it is no longer displayed in the direct menu.

TP1002215323

5-076-802-11(2) Copyright 2026 Sony Corporation

Renaming a Scene File

You can rename a scene file using [Paint/Look] – [Scene File] – [File Name] in the full menu.
When you save a scene file in internal memory using [Store Internal Memory], the file is saved with the edited name.

Hint

- When a scene file is loaded into the camera using [Recall Internal Memory], the name of the scene file is set to the default value of [File Name]. When a base look is selected using [Paint/Look] – [Base Look] – [Select] in the full menu, the name of the base look is set to the default value of [File Name].

Note

- When a scene file is saved to a memory card using [Save to Media(B)], the name of the scene file is the same as the scene file saved in internal memory. If there are duplicate file names on the memory card, a copy counter suffix is added automatically.

TP1002218811

5-076-802-11(2) Copyright 2026 Sony Corporation

Sharing the Look with Another Camera

You can share the look as a scene file with other cameras that support the save/load scene file functions. This function applies to the [Paint/Look] settings in the full menu.
You can save/load a scene file using [Paint/Look] – [Scene File] in the full menu.

1. **Set the desired look using the setup items in the [Paint/Look] menu.**
2. **Set the name for the look using [File Name].**
   For details, see "Renaming a Scene File."
3. **Execute [Store Internal Memory] to save the current look as a scene file in internal memory.**
   For details, see "Storing a Look as a Scene File."
4. **Execute [Save to Media(B)] to save a scene file from internal memory to a memory card.**
   For details, see "Saving a Scene File from Internal Memory to a Memory Card."
5. **Insert the memory card on which the scene file was stored in step 4 in card slot B of the sharing destination camera that supports this function.**
6. **On the sharing destination camera, execute [Load from Media(B)] to load the scene file into internal memory.**
   For details, see "Loading a Scene File Saved on a Memory Card into Internal Memory."
7. **On the sharing destination camera, execute [Recall Internal Memory] to recall the scene file stored in internal memory.**
   The look of the sharing source camera that was saved in step 3 is applied to the image quality settings of this camera.

Storage destination of the recorded file

The scene file is stored in the following directory on a memory card.

Memory card	Folder path
SDXC	/PRIVATE/SONY/PRO/SCENE
CFexpress Type A	/SONY/PRO/SCENE

Note

- If there are duplicate file names on the memory card, a copy counter suffix is added automatically.
- It is not possible to completely reproduce the image quality settings of the loaded scene file.
- Setup items that exist in the scene file loaded from a memory card but that do not exist on the camera that loaded the file will not be loaded.
- Setup items that exist on the camera that loaded a scene file but that are not in the scene file loaded from the memory card are set to the default value of the camera that loaded the file.
- Where the setup items are the same but the configurable ranges in the menu are different, values within the supported range will be loaded.
- Even when settings can be loaded, the image quality may not be the same due to differences in sensors and camera signal processing between models. Check the image quality after loading a file.
- Limit the number of scene files saved separately for SDR and for HDR to a maximum of 60 each. If this limit is exceeded, all saved files will no longer be accessible on the camera.

Related Topic

- Storing a Look as a Scene File
- Saving a Scene File from Internal Memory to a Memory Card
- Loading a Scene File Saved on a Memory Card into Internal Memory

TP1002218814

5-076-802-11(2) Copyright 2026 Sony Corporation

Saving a Scene File from Internal Memory to a Memory Card

You can save a scene file stored in internal memory in the camera to a memory card using [Paint/Look] – [Scene File] – [Save to Media(B)] in the full menu.

Hint

- Scene files stored on memory cards can be imported into other cameras that support that function.
- The setup items of the unit included in a scene file are the same items saved in internal memory. For details, see "Items Saved in Files."

Note

- If a scene file uses a user base look and the original Cube data for the user base look is not saved on the camera, the scene file cannot be saved to a memory card. In this case, a [!] icon will be displayed in front of the scene file name in the scene file list.

Related Topic

- Items Saved in Files

TP1002218809

5-076-802-11(2) Copyright 2026 Sony Corporation

Loading a Scene File Saved on a Memory Card into Internal Memory

You can load a scene file saved on a memory card into internal memory in the camera using [Paint/Look] – [Scene File] – [Load from Media(B)] in the full menu.

Hint

- When a scene file is loaded from a memory card into internal memory, you can select and apply the scene file to the current image quality settings using [Paint/Look] – [Scene File] – [Recall Internal Memory] in the full menu.

Note

- When loading a scene file into a different model or into the same model with a different firmware version, only the values of common settings are loaded into internal memory.
- Even when settings can be loaded, the image quality may not be the same due to differences in sensors and camera signal processing between models.

TP1002218810

5-076-802-11(2) Copyright 2026 Sony Corporation

Interchangeable Lens Digital Camera
ILME-FX5/ILME-FX5B

Applying a LUT to the Output Video

When you select log shooting mode and record the tonal range evenly from shadows to highlights, you can make fine adjustments in post-production. For example, restoring the tonal range in shadows or highlights locally.
However, when viewing recorded content on a regular monitor, the overall contrast is low, making it difficult to adjust settings such as focus and exposure.

The unit allows you to apply a LUT to the LCD monitor/viewfinder video to assist with various adjustments during shooting. You can also apply a LUT to the playback video to check the final result.
The LUT that is applied varies according to the following system types. However, only one LUT can be applied.

- HDMI output
- LCD monitor/viewfinder, proxy, streaming

Applying a LUT to the HDMI output video

Set [Shooting] – [LUT On/Off] – [1 HDMI] to [LUT On] in the full menu.
The same operation is supported using an assignable button assigned with [1 HDMI].

Note

- Gamma display assist is enabled during focus magnification.

Applying a monitor LUT to the proxy and remote live view output video

Set [Shooting] – [LUT On/Off] – [2 Proxy/Remote Live View] to [LUT On] in the full menu.
The same operation is supported using an assignable button assigned with [2 Proxy/Remote Live View].

Applying a monitor LUT to the LCD monitor and viewfinder output video

Set [Shooting] – [LUT On/Off] – [3 LCD Monitor/VF] to [LUT On] in the full menu.
The same operation is supported using an assignable button assigned with [3 LCD Monitor/VF].

TP1002326220

5-076-802-11(2) Copyright 2026 Sony Corporation

Changing the LUT

You can change the LUT applied to the output video using [Paint/Look] – [Base Look] – [Select] in the full menu.

Hint

- The unit provides [s709] / [709(800%)] / [S-Log3] as preset LUTs.
- You can also import and apply 3D LUT files.

Related Topic

- Importing a Desired Base Look
- Deleting a Base Look

TP1002326221

5-076-802-11(2) Copyright 2026 Sony Corporation

Changing the Distribution of Dark and Bright Areas in the Recorded Video Information

In [Cine EI] / [Cine EI Quick] mode, you can change the distribution between dark and bright areas by changing [Exposure Index] from the base sensitivity, for example, when you want to prioritize the tonal range of dark areas over bright areas.

1. **Select [Shooting] – [LUT On/Off] – [3 LCD Monitor/VF] – [LUT On] in the full menu.**
2. **Sets the EI gain value for log shooting mode ([Cine EI] / [Cine EI Quick]) using [Shooting] – [Exposure Index] – [EI Select] in the full menu.**
3. **Adjust the exposure so that the image on the LCD monitor/viewfinder is correct.**

Hint

- The second number of the set value indicates the number of stops of information assigned to bright areas (areas brighter than 18% gray). Areas brighter than this will be overexposed (blown out).
  Example: “400EI / 5.0E” allocates 5.0 stops to the bright side.

Note

- Gamma display assist is enabled during focus magnification. The [Exposure Index] setting is not applied to gamma display assist.

TP1002326222

5-076-802-11(2) Copyright 2026 Sony Corporation

Recording a 3D LUT File as Metadata

You can record the 3D LUT file (CUBE file) that is applied to the LCD monitor/viewfinder image during shooting as metadata in a clip.

To enable this function, set [Project] – [Base Setting] – [Cine EI/Flexible ISO Setting] – [Embed LUT File] to [On] in the full menu.
The 3D LUT file (CUBE file) that is selected at the start of recording is recorded as metadata.
However, it cannot be recorded as metadata in the following cases.

- When a 3D LUT file that was imported in a previous version is selected (file with ⚠ displayed before the file name when a base look is selected)
- When a 3D LUT file that can be saved is selected and you start recording immediately after changing the LUT data to be applied

Hint

- The used 3D LUT file is saved in a designated folder on the media.

Memory card	Folder path
SDXC	/PRIVATE/SONY/PRO/LUT/
CFexpress Type A	/SONY/PRO/LUT/

Note

- Only one metadata instance can be recorded for a single clip.

TP1002326223

5-076-802-11(2) Copyright 2026 Sony Corporation

Recording the HDMI Output Video

You can record the RAW video signal that is output from the HDMI connector of the unit on a compatible external recorder.

1. **Connect the external RAW recorder to the HDMI connector of the unit.**
2. **Select one of [Project] – [Base Setting] – [Shooting Mode] – [Flexible ISO] / [Cine EI Quick] / [Cine EI] in the full menu.**
3. **Select the imager size (FF only) using [Project] – [Imager Mode] in the menu or [Project] – [Rec Format] – [Imager Mode] in the full menu.**
4. **Select [Project] – [Rec Format] – [Internal Rec / RAW Out] – [RAW (HDMI) Only] in the full menu.**

   Selecting [Int. Rec & RAW (HDMI)] allows you to record video to a memory card in the unit at the same time as recording to the external RAW recorder.
5. **Check that the external recorder is turned on, then press the record START/STOP button of the unit.**

Note

- If you attempt to record to an external recorder without using the record START/STOP button of the unit, the output may not be recorded correctly.

TP1002326224

5-076-802-11(2) Copyright 2026 Sony Corporation

Recording Status Indicator

When [Monitoring] – [Display On/Off] – [Output Look] is set to [On] in the full menu, the recording status of RAW video is displayed as an icon on the LCD monitor/viewfinder.

Note

- The unit outputs the recording control signal from the HDMI connector, but it cannot acquire the status of an external recorder. Accordingly, even if the unit indicates that recording RAW video is in progress, recording may not actually be occurring. Check the indication on the external recorder for the actual operating status.

TP1002326225

5-076-802-11(2) Copyright 2026 Sony Corporation

Network Functions

The unit can connect to a mobile device, such as a smartphone or tablet, allowing you to control the unit remotely from a mobile device. The unit can also be connected to the Internet to transfer files and to use various services.

- Remote control
  You can control the unit remotely from a mobile device while viewing the camera image or playback image.

  Note

  - If unauthorized access is detected, the camera may become unable to accept communications. If this occurs, reconnect from the beginning.

- File transfer
  You can transfer a proxy clip or original clip that is recorded on a memory card in the unit to a cloud server via the Internet.

- Streaming
  You can stream the camera image of the unit using the RTMP/RTMPS or SRT streaming protocols.

“Monitor & Control” application

This application allows you to set the white balance and exposure settings, focus, and other parameters while monitoring the image of the unit on the screen of a mobile device.

“Creators' App for Enterprise” application

You can easily transfer files to the “C3 Portal” cloud service using the “Creators' App for Enterprise” application.
First, obtain a “C3 Portal” account and install “Creators' App for Enterprise” on a mobile device.
For details about obtaining a “C3 Portal” account, contact the administrator of your organization.

Note

- The cloud service may not be available, depending on the region in which you live.

“Camera Remote SDK”

This is a development environment provided by Sony for software developers to develop solutions and applications using Sony cameras. Using this SDK allows developers to remotely control Sony cameras from a host PC and to develop unique applications for shooting and monitoring.
For details about each application and the SDK, contact your Sony sales or service representative. For details about operation, refer to the corresponding Help or Help Guide.

TP1002215326

5-076-802-11(2) Copyright 2026 Sony Corporation

Connecting with “Monitor & Control”

Connect to the unit with a mobile device and then use the mobile device to monitor the image of the unit using “Monitor & Control.”

Connection method	Features
Wi-Fi connection using Bluetooth pairing/Bluetooth pairing (Wi-Fi)	When paired with a mobile device using Bluetooth, the unit automatically acts as an AP[1] and can connect to only one mobile device. Even if your mobile device is connected to the Internet, the unit will not have Internet access.
Wi-Fi connection with camera as an AP[1] (Wi-Fi Direct connection)/Wi-Fi	The unit acts as an AP[1] and can connect to only one mobile device. Even if your mobile device is connected to the Internet, the unit will not have Internet access.
Wi-Fi connection with wireless LAN router as an AP[1]/Wi-Fi	The unit can be operated from multiple mobile devices. If your router connects to the Internet and allows connection to the unit, the unit will have Internet access.
Wired LAN connection via a router/Wired LAN	
Wi-Fi tethering[2] with mobile device as an AP[1]/Tethering (Wi-Fi)	The mobile device acts as an AP[1] and can connect to only one device. If your mobile device connects to the Internet and allows connection to the unit, the unit will have Internet access.
USB tethering[2] with mobile device as an AP[1]/Tethering (USB)	

1) Access point (AP): Device that supplies an SSID for Wi-Fi connections
2) Tethering (Internet sharing): A function that allows you to connect to the Internet via mobile network data communication using the SIM card of a mobile device

For details about how to connect to the unit with a mobile device and how to operate the “Monitor & Control” application, refer to the “Monitor & Control” Help Guide.

Related Topic

- Connecting to the Internet via Wireless LAN
- Connecting to the Internet via USB Tethering
- Connecting to the Internet via Wired LAN

TP1002215327

5-076-802-11(2) Copyright 2026 Sony Corporation

Connecting to the Internet via Wireless LAN

Connect the unit to an existing wireless LAN access point. Connect the mobile device to control operation via the access point. The 10 most recently connected access points are displayed in the history. The connection history is saved in an All file, but the access point passwords are not saved. Password entry is required the next time you connect after loading an All file.

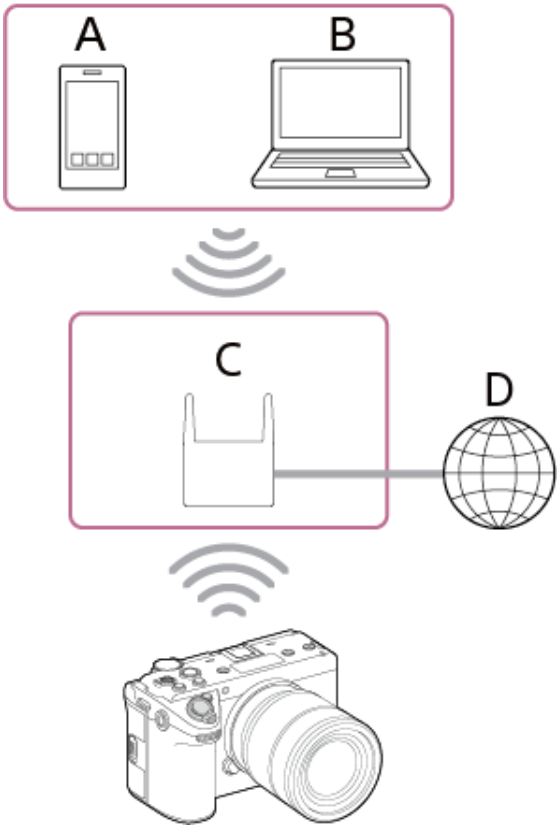

A: Smartphone/tablet
B: Computer
C: Access point
D: Internet

Hint

- When connected to an access point, the unit operates in station (ST) mode.
- You may be able to configure your mobile device as an access point (Wi-Fi tethering). For details, refer to the operation manual for the mobile device.

Connecting using the access point auto detection function

1. **Set [Network] – [Wireless LAN] – [Setting] to [Station Mode] in the full menu.**
2. **Select [Network] – [Wireless LAN] – [Scan Networks] in the full menu.**
   The [Scan Networks] screen appears.

Note

- The unit does not support simultaneous use of wireless LAN and wired LAN.
- The unit is not a network device (for example, a router or switching hub). It is strongly recommended that you connect the unit to a network where you can configure and manage the network settings appropriately to protect against network-based attacks, such as DoS attacks (Denial of Service attacks).

- When connecting the unit to a network, connect it via a router that is configured and managed appropriately, or connect it to a LAN port that has the same functionality. If connected without such protection (for example when using free Wi-Fi), problems may occur. When properly configured, routers provide sufficient protection against DoS attacks or loss of functionality of devices in the network. If you notice anything unusual, immediately disconnect the camera from the network.

3. **Select the access point for the network to which you want to connect and enter the password.**
4. **Configure the following connection settings, as required.**

Configuration item	Description
[DHCP]	Set the DHCP setting. When set to [On], the IP address is assigned to the unit automatically. To assign an IP address to the unit manually, set to [Off].
[IP Address]	Enter the IP address of the unit. This setting is available only when [DHCP] is set to [Off].
[Subnet Mask]	Enter the subnet mask of the unit. This setting is available only when [DHCP] is set to [Off].
[Gateway]	Enter the address of the gateway. This setting is available only when [DHCP] is set to [Off].
[DNS Auto]	Set whether to acquire DNS automatically. When set to [On], the DNS server address is automatically acquired. This setting is available only when [DHCP] is set to [On].
[Primary DNS Server]	Enter the address of the primary DNS server. This setting is available only when [DNS Auto] is set to [Off].
[Secondary DNS Server]	Enter the address of the secondary DNS server. This setting is available only when [DNS Auto] is set to [Off].

5. **When finished, press the [Connect] button.**
   The unit connects to the Internet.

Hint

- To use “Monitor & Control” or the “Camera Remote SDK” to control the unit from an external device, set [Network] – [Wireless LAN] – [Camera Remote Control] to [Enable] in the full menu.
- You can check the authentication information for connecting to the unit using [Network] – [Network Setup] – [Show Authentication] in the full menu. Take care that the screen cannot be viewed and the QR code image cannot be copied by others.

Connecting manually by entering access point information

1. **Set [Network] – [Wireless LAN] – [Setting] to [Station Mode] in the full menu.**
2. **Set [Network] – [Wireless LAN] – [Manual Register] in the full menu.**
   The [Wireless LAN] – [Manual Register] screen appears.

3. **Configure the following settings.**

Configuration item	Description
[SSID]	Enter the SSID for the wireless LAN access point. **Note** - Enter 1 to 32 valid input characters. The following are valid input characters. Alphabetic characters (uppercase and lowercase), numeric characters, symbols (- . @ _ ( ) ! " # $ % & ' * + , / : ; < = > ? [\ ] ^ ` { | } ~)

Configuration item	Description
[Security]	Select the encryption method. **Note** - In this topic, wireless LAN access points and wireless LAN routers that relay LAN connections are referred to as “access points.” - The unit supports connections to access points with WPA3-SAE, WPA2-PSK, or no security settings. For secure wireless LAN connection, connection to access points with WPA3 or WPA2 security setting is strongly recommended. - By default, the WPA2 security method is selected. - If you connect to an access point without any security setting, you may be subject to hacking, access by malicious third parties, or attacks upon vulnerabilities. Unless it is otherwise unavoidable, connection without any security setting is not recommended. - Configuring security on a wireless LAN is very important. Sony will not be liable for any damages resulting from security measures not being taken, or if a security problem occurs due to unavoidable circumstances in the use of wireless LAN.

[Password]	Enter the password for the wireless LAN access point.
	
	Note
	- The following shows the number of valid input characters.
	  - When set to [WPA2]: 8 to 63 characters
	  - When set to [WPA3]: 8 to 128 characters
	  - When set to [None]: 0 characters
	
	  The following are valid input characters.
	  Alphabetic characters (uppercase and lowercase), numeric characters, symbols (- . @ _ ( ) ! " # $ % & ' * + , / : ; < = > ? [\ ] ^ ` { | } ~)

[DHCP]	Set the DHCP setting. When set to [On], the IP address is assigned to the unit automatically. To assign an IP address to the unit manually, set to [Off].
[IP Address]	Enter the IP address of the unit. This setting is available only when [DHCP] is set to [Off]. **Note** - Use the ▲/▼ buttons to enter an address in the range 0.0.0.0 to 255.255.255.255 for each segment.
[Subnet Mask]	Enter the subnet mask of the unit. This setting is available only when [DHCP] is set to [Off]. **Note** - Use the ▲/▼ buttons to enter an address in the range 0.0.0.0 to 255.255.255.255 for each segment.
[Gateway]	Enter the address of the gateway. This setting is available only when [DHCP] is set to [Off]. **Note** - Use the ▲/▼ buttons to enter an address in the range 0.0.0.0 to 255.255.255.255 for each segment.

Configuration item	Description
[DNS Auto]	Set whether to acquire DNS automatically. When set to [On], the DNS server address is automatically acquired. This setting is available only when [DHCP] is set to [On].
[Primary DNS Server]	Enter the address of the primary DNS server. This setting is available only when [DNS Auto] is set to [Off]. **Note** ● Use the ▲/▼ buttons to enter an address in the range 0.0.0.0 to 255.255.255.255 for each segment.
[Secondary DNS Server]	Enter the address of the secondary DNS server. This setting is available only when [DNS Auto] is set to [Off]. **Note** ● Use the ▲/▼ buttons to enter an address in the range 0.0.0.0 to 255.255.255.255 for each segment.

4. **When finished, press the [Connect] button.**
   The unit connects to the Internet.

Hint

- To use “Monitor & Control” or the “Camera Remote SDK” to control the unit from an external device, set [Network] – [Wireless LAN] – [Camera Remote Control] to [Enable] in the full menu.
- You can check the authentication information for connecting to the unit using [Network] – [Network Setup] – [Show Authentication] in the full menu. Take care that the screen cannot be viewed and the QR code image cannot be copied by others.

Note

- [Security] (encryption method) can be set to [None], [WPA2], or [WPA3]. The use of [WPA2] or [WPA3] encryption is recommended from a security standpoint. For secure wireless LAN connection, connection to access points with WPA2 or WPA3 security setting is strongly recommended.
- If you connect to an access point without any security setting, you may be subject to hacking, access by malicious third parties, or attacks upon vulnerabilities. Unless it is otherwise unavoidable, connection without any security setting is not recommended.
- When configuring an access point on the [Manual Register] screen, the number and type of characters that can be entered are as follows.
  - When entering an SSID:
    1 to 32 valid input characters. The following are valid input characters.
    Alphabetic characters (uppercase and lowercase), numeric characters, symbols (- . @ _ ( ) ! " # $ % & ' * + , / : ; < = > ? [\ ] ^ ` { | } ~)
  - When entering a password:
    For WPA2, 8 to 63 valid input characters. For WPA3, 8 to 128 valid input characters. The following are valid input characters.
    Alphabetic characters (uppercase and lowercase), numeric characters, symbols (- . @ _ ( ) ! " # $ % & ' * + , / : ; < = > ? [\ ] ^ ` { | } ~)

TP1002215328

5-076-802-11(2) Copyright 2026 Sony Corporation

Connecting to the Internet via USB Tethering

You can connect the unit to a smartphone via a USB cable, and then connect to the Internet using the smartphone.

1. **Turn the unit on.**
2. **Set [Network] – [USB Tethering] – [Setting] to [On(PORT1)] in the full menu.**
   USB tethering is turned on.

3. **Connect the unit and smartphone via a USB cable.**
4. **Enable tethering communication on the smartphone.**
   For details, refer to the operation manual for the smartphone.
   The unit connects to the Internet.

Hint

- To use “Monitor & Control,” “Creators' App for Enterprise,” or the “Camera Remote SDK” to control the unit from an external device, set [Network] – [USB Tethering] – [Camera Remote Control] to [Enable] in the full menu.
- You can check the authentication information for connecting to the unit using [Network] – [Network Setup] – [Show Authentication] in the full menu. Take care that the screen cannot be viewed and the QR code image cannot be copied by others.

Note

- If a “USB connected...” message appears on a black screen, remove the USB cable to return to the shooting screen, set [Technical] – [USB] – [USB Cnct Mode (PORT1)] to [USB Tethering] in the full menu or set [Network] – [USB Tethering] – [Setting] to [On(PORT1)] in the full menu, and then connect the USB cable.
- USB tethering cannot be used if the smartphone is connected via a USB hub.
- Only use trusted smartphone devices for tethering. Connecting to devices of unknown origin is not recommended due to security concerns.

TP1002215329

5-076-802-11(2) Copyright 2026 Sony Corporation

Connecting to the Internet via Wired LAN

You can connect to the Internet by connecting the unit and a wireless LAN router by wired LAN connection.

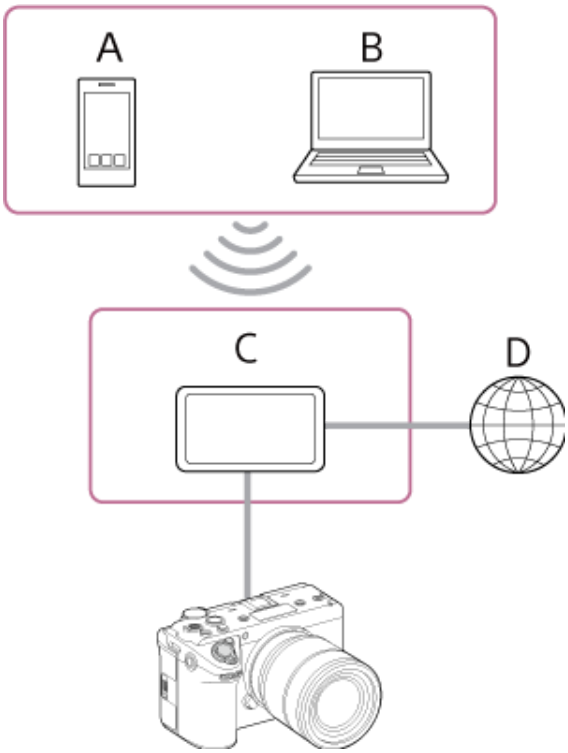

A: Smartphone/tablet
B: Computer
C: Wireless LAN router
D: Internet

1. **Connect the LAN connector of the unit to a wireless LAN router using a LAN cable.**
2. **Turn the unit on.**
3. **Set [Network] – [Wired LAN] – [Setting] to [On] in the full menu.**

Note

- The unit does not support simultaneous use of wireless LAN and wired LAN.
- The unit is not a network device (for example, a router or switching hub). It is strongly recommended that you connect the unit to a network where you can configure and manage the network settings appropriately to protect against network-based attacks, such as DoS attacks (Denial of Service attacks).
- When connecting the unit to a network, connect it via a router that is configured and managed appropriately, or connect it to a LAN port that has the same functionality. If connected without such protection, problems may occur. When properly configured, routers provide sufficient protection against DoS attacks or loss of functionality of devices in the network. If you notice anything unusual, immediately disconnect the camera from the network.

4. **Configure the following settings using [Network] – [Wired LAN] – [Detail Settings] in the full menu, as required, and select [Set].**

Configuration item	Description
[DHCP]	Set the DHCP setting. When set to [On], the IP address is assigned to the unit automatically. To assign an IP address to the unit manually, set to [Off].

Configuration item	Description
[IP Address]	Enter the IP address of the unit. This setting is available only when [DHCP] is set to [Off]. **Note** ● Use the ▲/▼ buttons to enter an address in the range 0.0.0.0 to 255.255.255.255 for each segment.
[Subnet Mask]	Enter the subnet mask of the unit. This setting is available only when [DHCP] is set to [Off]. **Note** ● Use the ▲/▼ buttons to enter an address in the range 0.0.0.0 to 255.255.255.255 for each segment.
[Gateway]	Enter the address of the gateway. This setting is available only when [DHCP] is set to [Off]. **Note** ● Use the ▲/▼ buttons to enter an address in the range 0.0.0.0 to 255.255.255.255 for each segment.
[DNS Auto]	Set whether to acquire DNS automatically. When set to [On], the DNS server address is automatically acquired. This setting is available only when [DHCP] is set to [On].
[Primary DNS Server]	Enter the address of the primary DNS server. This setting is available only when [DNS Auto] is set to [Off]. **Note** ● Use the ▲/▼ buttons to enter an address in the range 0.0.0.0 to 255.255.255.255 for each segment.
[Secondary DNS Server]	Enter the address of the secondary DNS server. This setting is available only when [DNS Auto] is set to [Off]. **Note** ● Use the ▲/▼ buttons to enter an address in the range 0.0.0.0 to 255.255.255.255 for each segment.

Hint

- To use “Monitor & Control” or the “Camera Remote SDK” to control the unit from an external device, set [Network] – [Wired LAN] – [Camera Remote Control] to [Enable] in the full menu.
- You can check the authentication information for connecting to the unit using [Network] – [Network Setup] – [Show Authentication] in the full menu. Take care that the screen cannot be viewed and the QR code image cannot be copied by others.

Note

- Always select [Set] after changing the connection settings. The settings are not applied if [Set] is not selected.

TP1002215330

5-076-802-11(2) Copyright 2026 Sony Corporation

Transferring Files to “C3 Portal”

You can transfer files to the “C3 Portal” cloud service using the “Creators' App for Enterprise” application.

1. **Execute [Network] – [Network Setup] – [Setup for Mobile App] in the full menu.**
   A confirmation screen appears for items that will be updated automatically.
   The following settings in the [Network] menu are selected automatically.

   - [USB Tethering] – [Setting] – [On(PORT1)]
   - [USB Tethering] – [Camera Remote Control] – [Enable]

2. **Check the settings and select [OK].**
   The configuration starts.
   A configuration message appears.
   When the configuration is completed successfully, the access authentication screen appears on the LCD monitor/viewfinder.

   The following information is displayed on the screen.
   User name/password/fingerprint/camera model name/serial number

   Hint

   - This screen is not output to the video output.

   Note

   - Take care that the password cannot be viewed and the QR code image cannot be copied by others.

3. **Start “Creators' App for Enterprise” on the smartphone and sign in to the “C3 Portal” cloud service.**
4. **Connect a USB cable to the USB Type-C connector of the unit, and then connect the smartphone.**
5. **Enable the USB tethering function on the smartphone.**
   For details, refer to the operation manual for the smartphone.

6. **Follow the instructions on the “Creators' App for Enterprise” screen and scan the QR code displayed on the LCD monitor of the unit.**
   File transfer setup information is sent from the smartphone to the unit, and the following screen appears on the unit.

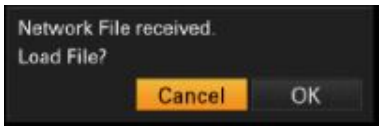

7. **Select [OK].**
   The setup information starts loading.
   When the setup is loaded successfully, a message appears.

Note

- “Creators' App for Enterprise” overwrites the [Network] – [File Transfer] setting of the unit.
- [Root Certificate] cannot be set automatically. Configure manually.

Transferring original clips

Set [Network] – [File Transfer] – [Auto Upload] to [On] in the full menu to enable transfer of original clips to “C3 Portal.”
Each time a recording finishes, the clip is transferred to the location associated with your “C3 Portal” account.

Transferring proxy clips

Set [Network] – [File Transfer] – [Auto Upload (Proxy)] to [On] in the full menu to enable transfer of proxy clips to “C3 Portal.”
Each time a recording finishes, the clip is transferred to the location associated with your “C3 Portal” account.

Hint

- Files transferred from the unit are cached in “Creators' App for Enterprise” and then transferred to “C3 Portal.” The file transfer status display on the unit indicates the transfer status to “Creators' App for Enterprise.”
- When the file transfer from the unit to “Creators' App for Enterprise” is completed, you can turn off the unit but note that file transfer from the smartphone may be continuing. Be aware of the remaining battery charge on the smartphone.
- You can transfer any clips to “C3 Portal.” For details, see the following topic.
  Selecting and Transferring a Clip

Related Topic

- Importing a Desired Base Look
- Saving Settings to a File

TP1002215331

5-076-802-11(2) Copyright 2026 Sony Corporation

Preparing to Transfer Files

You can transfer a recorded proxy clip or original clip to a server on the Internet or to a server on the local network.
Connect the unit to the Internet or local network using the following procedures.

Connecting to the Internet via Wireless LAN
Connecting to the Internet via USB Tethering
Connecting to the Internet via Wired LAN

Registering a file transfer destination

Register a server to which to transfer files comprising the clips beforehand.

1. **Select [Network] – [File Transfer] – [Server Settings1] / [Server Settings2] / [Server Settings3] in the full menu.**
2. **The transfer destination setup screen appears.**
3. **Set each item on the transfer destination setup screen.**

Configuration item	Description
[Display Name]	Enter the name of the server to display in the transfer destination list. **Note** • 1 to 16 valid input characters. The following are valid input characters. Alphabetic characters (uppercase and lowercase), numeric characters, symbols (! # $ % & ' ( ) * + , - . / : ; < = > ? @ [ ] ~)
[Service]	Displays the server type. [FTP]: FTP server
[Host Name]	Enter the address of the server. **Note** • 1 to 255 valid input characters. The following are valid input characters. Alphabetic characters (uppercase and lowercase), numeric characters, symbols (. -)
[Port]	Enter the port number of the server to connect. **Note** • 1 to 5 valid input characters. Only numeric characters are valid input characters.
[User Name]	Enter the user name. **Note** • 0 to 255 valid input characters. The following are valid input characters. Alphabetic characters (uppercase and lowercase), numeric characters, symbols (- . @ _ ( ) ! " # $ % & ' * + , / : ; < = > ? [\ ] ^ ` { | } ~)

Configuration item	Description
[Password]	Enter the password. **Note** ● 0 to 255 valid input characters. The following are valid input characters. Alphabetic characters (uppercase and lowercase), numeric characters, symbols (- . @ _ ( ) ! " # $ % & ' * + , / : ; < = > ? [\ ] ^ ` { | } ~)
[Passive Mode]	Turn passive mode on/off.
[Destination Directory]	Enter the name of the directory on the destination server. **Note** ● Original clips are transferred to the “Main” folder within the directory specified as the transfer destination. ● When editing, “□” indicates characters that cannot be changed. Correct operation is not guaranteed when editing a directory name that contains these characters. If you need to edit, delete all the characters and re-enter a value. ● If characters that are invalid on the destination server are entered in [Destination Directory], files will be transferred to the user’s home directory. Invalid characters will vary depending on the server. ● 0 to 128 valid input characters. The following are valid input characters. Alphabetic characters (uppercase and lowercase), numeric characters, symbols (! # $ % & ' ( ) * + , - . / : ; < = > ? @ [ ] ~)
[Using Secure Protocol]	Set whether to perform secure FTP transfers.
[Root Certificate]	Load/clear a certificate. ● [Load]: Select [Set] in step 3 to import a CA certificate. **Note** ● The certificate to be loaded must be in PEM format with “certification.pem” file name, and should be written to the root directory of the memory card inserted in card slot B. ● [Clear]: Select [Set] in step 3 to clear a CA certificate. ● [None]: Do not load or clear a certificate. **Note** ● Set the clock of the unit to the correct time before importing a CA certificate. ● Depending on the recording format, [Load] / [Clear] cannot be executed for a certificate because the recording operation takes priority.
[Root Certificate Status]	Displays the load status of the certificate.
[Reset]	Reset the [Server Settings1] / [Server Settings2] / [Server Settings3] settings to the default values.

4. When finished, select [Set] to apply the settings.

Note

● Always select [Set] after changing the settings. The settings are not applied if [Set] is not selected.

5-076-802-11(2) Copyright 2026 Sony Corporation

Selecting and Transferring a Clip

You can transfer a proxy clip or original clip that is recorded on a memory card to a server.

Transferring proxy clips

1. **Select [Clip Operations] – [Transfer Clip (Proxy)] – [Select Clip] in the full menu.**
   The display changes from the full menu to the clip list screen.
   Clips can be transferred from the clip list screen or the filtered clip list screen.

2. **Select the clip you want to transfer, then press the MENU button.**
   A transfer confirmation screen appears.

3. **Select [Execute].**
   The proxy clip corresponding to the selected original clip is registered as a transfer job, and the transfer begins.
   When the transfer job is successfully registered, the registration result screen appears.

4. **Select [OK].**

Hint

- Select [All Clips] instead of [Select Clip] in step 1 to transfer the proxy clips corresponding to all the original clips.

Note

- Up to 200 transfer jobs can be registered.

Transferring original clips

1. **Select [Clip Operations] – [Transfer Clip] – [Select Clip] in the full menu.**
   The display changes from the full menu to the clip list screen.
   Files can be transferred from the clip list screen or the filtered clip list screen.

2. **Select the clip you want to transfer, then press the MENU button.**
   A transfer confirmation screen appears.

3. **Select [Execute].**
   The selected clip is registered as a transfer job, and the transfer begins.
   When the transfer job is successfully registered, the registration result screen appears.

4. **Select [OK].**

Hint

- Select [All Clips] instead of [Select Clip] in step 1 to transfer all clips.

Note

- Original clips are transferred to the “Main” folder within the directory specified as the transfer destination.
- Up to 200 transfer jobs can be registered.

Checking the transfer status

You can check the file transfer status by selecting [Network] – [File Transfer] – [View Job List] in the full menu.
You can also check the file transfer status when connected with a mobile device using the “Catalyst Browse” application.

Hint

- If [Network] – [File Transfer] – [Auto Upload] / [Auto Upload (Proxy)] is set to [On] in the full menu when connected to a network, original clips and proxy clips are automatically transferred to the server specified using [Default Upload Server] when recording ends. If both original clips and proxy clips are configured for auto transfer, the auto transfer of proxy clips takes precedence.

Note

- The job list is retained when the unit is turned off, but up to 10 minutes of recent progress information may be lost if the battery pack is removed without first setting the power switch to ⏻ (off).
- If an error occurs during file transfer, the transfer of a clip with the same name as a transferred clip may not be resumed, depending on the settings and status of the transfer destination server. In this case, check the transfer destination server settings and status.

Related Topic

- Structure of the Clip List Screen
- Clip Operations

TP1002215333

5-076-802-11(2) Copyright 2026 Sony Corporation

Interchangeable Lens Digital Camera
ILME-FX5/ILME-FX5B

Transferring Clips Automatically

You can transfer clips automatically.

Transferring original clips automatically

Original clips can be transferred to a specified server automatically when recording ends.
To enable auto transfer, set [Network] – [File Transfer] – [Auto Upload] to [On] in the full menu.

Transferring proxy clips automatically

Proxy clips can be transferred to a specified server automatically when recording ends.
To enable auto transfer, set [Network] – [File Transfer] – [Auto Upload (Proxy)] to [On] in the full menu.

Related Topic

- Proxy Recording

TP1002215334

5-076-802-11(2) Copyright 2026 Sony Corporation

Transferring using Secure FTP

You can transfer files with encryption using FTPS in Explicit mode (FTPES) for the connection with the file transfer destination server.

Setting secure FTP transfer

For secure FTP transfer, set [Using Secure Protocol] to [On] in the file transfer destination server settings and import a certificate.

Notes on the FTP function

In FTP, the contents, user name, and password are not encrypted. For secure data transfer, use FTPES (FTPS).

About the FTPS function

The FTPS function supports various encryption algorithms to ensure secure file transfer. Multiple encryption algorithms, some of which may not comply with current security best practices, are supported for compatibility with a wide range of servers.

Encryption algorithms supported by the FTPS function

The following encryption algorithms are supported.

- TLS_RSA_WITH_AES_256_CBC_SHA256
- TLS_RSA_WITH_AES_128_CBC_SHA256
- TLS_ECDHE_RSA_WITH_AES_256_GCM_SHA384
- TLS_ECDHE_RSA_WITH_AES_256_CBC_SHA384
- TLS_ECDHE_RSA_WITH_AES_128_GCM_SHA256
- TLS_ECDHE_RSA_WITH_AES_128_CBC_SHA256
- TLS_ECDHE_ECDSA_WITH_AES_256_GCM_SHA384
- TLS_ECDHE_ECDSA_WITH_AES_256_CBC_SHA384
- TLS_ECDHE_ECDSA_WITH_AES_128_CBC_SHA256
- TLS_DHE_RSA_WITH_AES_256_GCM_SHA384
- TLS_DHE_RSA_WITH_AES_256_CBC_SHA256
- TLS_DHE_RSA_WITH_AES_256_CBC_SHA
- TLS_DHE_RSA_WITH_AES_128_CBC_SHA256

Recommended encryption algorithms

The following encryption algorithms are recommended based on the NIST recommendations (NIST SP 800-57 Part 1 Revision 5) and related security standards.

- TLS_ECDHE_RSA_WITH_AES_256_GCM_SHA384
- TLS_ECDHE_RSA_WITH_AES_128_GCM_SHA256
- TLS_ECDHE_ECDSA_WITH_AES_256_GCM_SHA384

About deprecated algorithms

The FTPS function also supports the following algorithms for compatibility, but they are deprecated based on the NIST recommendations (NIST SP 800-57 Part 1 Revision 5) and related security standards, and may be removed in a future version.

- TLS_RSA_WITH_AES_256_CBC_SHA256
- TLS_RSA_WITH_AES_128_CBC_SHA256
- TLS_ECDHE_RSA_WITH_AES_256_CBC_SHA384
- TLS_ECDHE_RSA_WITH_AES_128_CBC_SHA256
- TLS_ECDHE_ECDSA_WITH_AES_256_CBC_SHA384
- TLS_ECDHE_ECDSA_WITH_AES_128_CBC_SHA256
- TLS_DHE_RSA_WITH_AES_256_GCM_SHA384
- TLS_DHE_RSA_WITH_AES_256_CBC_SHA256
- TLS_DHE_RSA_WITH_AES_256_CBC_SHA
- TLS_DHE_RSA_WITH_AES_128_CBC_SHA256

About connection compatibility

The FTPS function is designed with a balance between security and compatibility. Currently, deprecated algorithms are supported for the following reasons, but they may be removed in a future version to improve security.

- Freelance photographers and videographers need to connect to servers running on various clients.
- Compatibility with older systems and legacy servers needs to be maintained.
- Not all users are prepared to change to a more secure setting because changing the encryption algorithm settings on the server side is complicated.
- The FTPS settings are often shared with other secure services. Any changes must be considered carefully as they may have an impact on other services on the server.
- A wide range of encryption algorithms must be supported to ensure interoperability in different environments.
  The encryption algorithm used during an FTPS connection is determined by automatic negotiation with the destination server, and therefore depends on the server settings. While aware of the security risks, compatibility is currently prioritized to satisfy the diverse needs of users.

Security risks

Using deprecated algorithms, including CBC/DHE/RSA/SHA-1, increases the risk that encrypted data may be decrypted or tampered with by an attacker, exposing data during transfer.

Recommendation for secure connection

Before using the FTPS function, check that the connection destination server supports the recommended encryption algorithm. Enable only the recommended algorithms on the server side and disable the deprecated algorithms.

References

- Recommendation for Key Management, Special Publication 800-57 Part 1 Revision 5, NIST, 2020.
- Transitioning the Use of Cryptographic Algorithms and Key Lengths, Special Publication 800-131A Revision 2, NIST, 2019.
- Recommendation for Block Cipher Modes of Operation: The CMAC Mode for Authentication, Special Publication 800-38B, NIST, 2005 (includes updates as of 10/06/2016).

Related Topic

- Preparing to Transfer Files

TP1002215335

5-076-802-11(2) Copyright 2026 Sony Corporation

Streaming

You can stream the camera video and audio of the unit with low latency.
Two streaming methods are supported.

- RTMP/RTMPS streaming
  You can stream the camera video and audio of the unit with low latency using RTMP (Real Time Messaging Protocol) developed by Adobe Inc. RTMPS which uses SSL encryption is also supported.

- SRT streaming
  You can stream the camera video and audio of the unit with low latency using SRT (Secure Reliable Transport) developed by Haivision. SRT streaming employs a listener and a caller. The listener has connection destination information, such as an IP address and domain. The caller connects to the listener. The unit corresponds to a caller.

Note

- For secure streaming distribution, the stream URL must use the “rtmps://” protocol. RTMP is used for general streaming but is not very secure. On the other hand, RTMPS encrypts data using SSL/TLS for secure streaming.
- In SRT, you can select AES-128 or AES-256 as the encryption setting. This ensures that streaming data is encrypted and streamed securely. You can also set [Encryption] (encryption method) for SRT to [None], but data will not be encrypted and communication will not be secure. When configuring this setting, be sure to take into consideration the security requirements of your network environment and the streaming destination.
- The encryption setting for SRT must match the destination setting. Setting the same encryption method as the destination will ensure normal communication.
- When using SRT, the valid input characters for the passphrase are alphabetic characters, numeric characters, and symbols. Entering 16 or more characters is strongly recommended.

The streaming bit rate range and initial value varies depending on the project frame rate and resolution as follows.

Project frame rate	Streaming		
	Resolution	Bit rate range (Mbps)	Initial value (Mbps)
59.94/50	3840×2160	38 only	–
	1920×1080	4.5 to 27	9
	1280×720	2.3 to 13.5	6
29.97/25/23.98	3840×2160	13 to 38	34
	1920×1080	3 to 18	6
	1280×720	1.5 to 9	4

Note

- Playback streaming using stored videos is not supported.
- Even if the video output format is interlaced, the streaming output will be in progressive format.

About the RTMPS function

The RTMPS function supports various encryption algorithms to ensure secure RTMPS streaming. Multiple encryption algorithms, some of which may not comply with current security best practices, are supported for compatibility with a wide range of streaming destination servers.

Encryption algorithms supported by the RTMPS function

The following encryption algorithms are supported.

- TLS_AES_256_GCM_SHA384
- TLS_AES_128_GCM_SHA256
- TLS_AES_128_CCM_SHA256
- TLS_ECDHE_ECDSA_WITH_AES_256_GCM_SHA384
- TLS_ECDHE_ECDSA_WITH_AES_256_CCM
- TLS_ECDHE_ECDSA_WITH_AES_256_CBC_SHA384
- TLS_ECDHE_RSA_WITH_AES_256_GCM_SHA384
- TLS_ECDHE_RSA_WITH_AES_256_CBC_SHA384
- TLS_DHE_RSA_WITH_AES_256_GCM_SHA384
- TLS_DHE_RSA_WITH_AES_256_CCM
- TLS_DHE_RSA_WITH_AES_256_CBC_SHA256
- TLS_ECDHE_ECDSA_WITH_AES_128_GCM_SHA256
- TLS_ECDHE_ECDSA_WITH_AES_128_CCM
- TLS_ECDHE_ECDSA_WITH_AES_128_CBC_SHA256
- TLS_ECDHE_RSA_WITH_AES_128_GCM_SHA256
- TLS_ECDHE_RSA_WITH_AES_128_CBC_SHA256
- TLS_DHE_RSA_WITH_AES_128_GCM_SHA256
- TLS_DHE_RSA_WITH_AES_128_CCM
- TLS_DHE_RSA_WITH_AES_128_CBC_SHA256

Recommended encryption algorithms

The following encryption algorithms are recommended based on the NIST recommendations (NIST SP 800-57 Part 1 Revision 5) and related security standards.

- TLS_AES_256_GCM_SHA384
- TLS_AES_128_GCM_SHA256
- TLS_AES_128_CCM_SHA256
- TLS_ECDHE_ECDSA_WITH_AES_256_GCM_SHA384
- TLS_ECDHE_ECDSA_WITH_AES_256_CCM
- TLS_ECDHE_RSA_WITH_AES_256_GCM_SHA384
- TLS_ECDHE_ECDSA_WITH_AES_128_GCM_SHA256
- TLS_ECDHE_ECDSA_WITH_AES_128_CCM
- TLS_ECDHE_RSA_WITH_AES_128_GCM_SHA256

About deprecated algorithms

The RTMPS function also supports the following algorithms for compatibility, but they are deprecated based on the NIST recommendations (NIST SP 800-57 Part 1 Revision 5) and related security standards, and may be removed in a future version.

Key exchange algorithms

- TLS_ECDHE_ECDSA_WITH_AES_256_CBC_SHA384
- TLS_ECDHE_RSA_WITH_AES_256_CBC_SHA384
- TLS_DHE_RSA_WITH_AES_256_GCM_SHA384
- TLS_DHE_RSA_WITH_AES_256_CCM
- TLS_DHE_RSA_WITH_AES_256_CBC_SHA256
- TLS_ECDHE_ECDSA_WITH_AES_128_CBC_SHA256
- TLS_ECDHE_RSA_WITH_AES_128_CBC_SHA256
- TLS_DHE_RSA_WITH_AES_128_GCM_SHA256
- TLS_DHE_RSA_WITH_AES_128_CCM
- TLS_DHE_RSA_WITH_AES_128_CBC_SHA256

About connection compatibility

The RTMPS function is designed with a balance between security and compatibility. Currently, deprecated algorithms are supported for the following reasons, but they may be removed in a future version to improve security.

- To use the RTMPS streaming function, connection to various servers is required to support RTMPS streaming.
- Compatibility with older systems and legacy servers needs to be maintained.
- Not all users are prepared to change to a more secure setting because changing the encryption algorithm settings on the server side is complicated.

- RTMPS settings are often shared with SSH settings and any changes would have impact on other services.
- A wide range of encryption algorithms must be supported to ensure interoperability in different environments.

The encryption algorithm used during an RTMPS connection is determined by automatic negotiation with the destination server, and therefore depends on the server settings. While aware of the security risks, compatibility is currently prioritized to satisfy the diverse needs of users.

Security risks

Using deprecated algorithms, including CBC and DHE, increases the risk that encrypted data may be decrypted or tampered with by an attacker, exposing data during streaming.

Recommendation for secure connection

Before using the RTMPS streaming function, check that the connection destination server supports the recommended encryption algorithm. Enable only the recommended algorithms on the server side and disable the deprecated algorithms.

References

- Recommendation for Key Management, Special Publication 800-57 Part 1 Revision 5, NIST, 2020.
- Transitioning the Use of Cryptographic Algorithms and Key Lengths, Special Publication 800-131A Revision 2, NIST, 2019.
- Recommendation for Block Cipher Modes of Operation: The CMAC Mode for Authentication, Special Publication 800-38B, NIST, 2005 (includes updates as of 10/06/2016).

Configuring RTMP/RTMPS streaming

Setting the connection destination and format

1. **Set [Network] – [Stream] to [RTMP/RTMPS 1] / [RTMP/RTMPS 2] / [RTMP/RTMPS 3] in the full menu.**
   The connection destination setup screen appears.

2. **Set each item on the connection destination setup screen.**

Configuration item	Description
[Display Name]	Set the display name in the [Destination Select] menu.
[Codec]	Displays the codec of the streaming video.
[Resolution]	Set the resolution of the streaming video. • 3840×2160P • 1920×1080P • 1280×720P
[Bit Rate]	Set the bit rate of the streaming video.
[Destination URL]	Set the URL of the server to connect. If the URL begins with “rtmps://” characters, streaming is recognized as RTMPS streaming and the streaming data is encrypted. In this case, a certificate for RTMPS connections is required.
[Stream Key]	Set the stream key used for the streaming connection.

Configuration item	Description
[RTMPS Certificate]	Load/clear a certificate for RTMPS streaming. ● [Load]: Load a certificate. **Note** ● The certificate to be loaded must be in PEM format, and should be written to the root directory of the memory card with “RTMPS_certification.pem” file name. ● [Clear]: Clear the certificate. ● [None]: Do not load or clear a certificate. If a certificate is not loaded here, the built-in default certificate of the unit will be used.

3. **When finished, select [Set] to apply the settings.**

Note

- Always select [Set] after changing the settings. The settings are not applied if [Set] is not selected.
- Set the clock of the unit to the correct time before importing a certificate for RTMPS connections.
- Depending on the recording format, [Load] / [Clear] cannot be executed for a certificate because the recording operation takes priority.

Replacing the built-in default certificate of the unit with another default certificate

1. **Insert a memory card on which a different default certificate is saved in card slot B.**
   Import file: “RTMPS_DefaultCertificates.pem” located in the root directory of the memory card

2. **Select [Network] – [Stream] – [RTMPS Default Certificates] – [Replace] – [Execute] in the full menu.**
   A message appears, confirming that the default certificate has been written to the memory card. You can also replace the default certificate with a user default certificate.

3. **Select [OK].**
   The default certificate is imported into the unit.
   When loaded successfully, a message appears.

Reverting to the built-in default certificate of the unit

Select [Network] – [Stream] – [RTMPS Default Certificates] – [Reset] – [Execute] in the full menu.
When the operation is completed successfully, a message appears.
The replacement default certificate is deleted and the built-in default certificate of the unit becomes enabled.

Checking the default certificate status

Select [Network] – [Stream] – [RTMPS Default Certificates] – [Status] in the full menu to display the status of the default certificate.
When the built-in default certificate of the unit is being used, [Preinstall] is displayed.
When a replacement default certificate is being used, the date and time that the certificate was replaced is displayed.
Display format: 4-digit year (Western calendar) + 2-digit month + 2-digit day + 2-digit hour (24-hour format) + 2-digit minute + 2-digit second
Example: 2024, December 1, 12:34:56 → 20241201123456

Configuring SRT streaming

Setting the connection destination and format

1. **Set [Network] – [Stream] to [SRT-Caller 1] / [SRT-Caller 2] / [SRT-Caller 3] in the full menu.**
   The connection destination setup screen appears.

2. **Set each item on the connection destination setup screen.**

Configuration item	Description
[Display Name]	Set the display name in the [Destination Select] menu.
[Codec]	Set the codec of the streaming video.
[Resolution]	Set the resolution of the streaming video. • 3840×2160P • 1920×1080P • 1280×720P
[Bit Rate]	Set the bit rate of the streaming video.
[Destination URL]	Set the URL of the server to connect.
[Port]	Set the port of the streaming destination.
[Latency]	Set the streaming distribution latency.
[TTL]	Set the time-to-live (TTL) value for streaming.
[Encryption]	Set the encryption method for streaming.
[Passphrase]	Set the passphrase used for encryption for streaming.
[ARC]	Enable/disable the Adaptive Rate Control function when streaming.

Note

- When [Codec] is set to [H.265/HEVC], some receivers may not support playback correctly. If a problem occurs during playback, try [H.264/AVC].

3. **When finished, select [Set] to apply the settings.**
   Always select [Set] after changing the settings. The settings are not applied if [Set] is not selected.
   [Reset]: Reset the settings to the default values.

Starting streaming

1. **Connect the unit to the Internet or local network.**

Note

- Use of wired LAN is recommended since streaming requires a large volume of continuous communication. If using the 2.4 GHz band wireless LAN, remote control from mobile devices or Bluetooth remote control operations may be disrupted. If the use of a wireless connection cannot be avoided, conduct sufficient testing beforehand in a radio wave environment similar to the actual usage environment.
- The unit is not a network device (for example, a router or switching hub). It is strongly recommended that you connect the unit to a network where you can configure and manage the network settings appropriately to protect against network-based attacks, such as DoS attacks (Denial of Service attacks).
- When connecting the unit to a network, connect it via a router that is configured and managed appropriately, or connect it to a LAN port that has the same functionality. If connected without such protection (for example when using free Wi-Fi), problems may occur. When properly configured, routers provide sufficient protection against DoS attacks or loss of functionality of devices in the network. If you notice anything unusual, immediately disconnect the camera from the network.

2. **Select the transfer settings configured beforehand using [Network] – [Stream] – [Destination Select] in the full menu.**
3. **Set [Network] – [Stream] – [Setting] to [On] in the full menu.**
   Streaming starts with the configured settings.

Note

- Streaming cannot be started in the following cases.

- When [Shooting] – [FPS] – [Fixed/Variable Select] is set to [Variable] in the full menu
- When [Project] – [Simul Rec] – [Setting] is set to [On] in the full menu
- When [Project] – [Interval Rec] – [Setting] is set to [On] in the full menu
- When [Project] – [Rec Format] – [Project Frame Rate] is set to 119.88 / 100 in the full menu.
- When [Project] – [Rec Format] – [Codec] is set to X-OCN codec in the full menu
- When [Project] – [Rec Format] – [Video Format] is set to 4096×2160P in the full menu.

- Once you start streaming, it may take several 10s of seconds before video/audio actually start streaming.
- If the streaming connection destination settings are invalid or if a network connection has not been established, ✕ is displayed by the streaming status indicator.
- Video/audio data are sent as-is via the Internet. Accordingly, the data may be accessible by other parties. Make sure that the connection destination is able to receive the streaming data. Data may be sent to an unintended party due to an error in the address settings or other reason.
- Streaming may be interrupted, depending on your internet connection or network conditions. If this occurs, start streaming again.
- The image quality may be adversely affected for fast-moving scenes.
- You may not be able to play all frames if streaming at high resolution and low bit rate. To reduce this phenomena, select a lower resolution in [Resolution].
- The video cannot be viewed using the “Monitor & Control” application during streaming.
- File transfer is not supported during streaming. File transfer is supported after stopping streaming.
- If streaming is started during file transfer, the file transfer stops. File transfer restarts after stopping streaming.
- The screen information update frequency is reduced during streaming, but this does not affect operation.
- The recording settings cannot be changed during streaming.
- The distribution formats available for streaming vary depending on the [Rec Format] of the main signal.

Stopping streaming

Set [Network] – [Stream] – [Setting] to [Off] in the full menu to stop streaming.

TP1002215336

5-076-802-11(2) Copyright 2026 Sony Corporation

Interchangeable Lens Digital Camera
ILME-FX5/ILME-FX5B

Structure of the Clip List Screen

When you press the CLIPS button, clips recorded on the memory card are displayed on the clip list screen.
You can select a clip on the clip list screen and start playback from that clip. On the clip list screen, you can operate the clips or check clip properties using the [Clip Operations] menu in the full menu. In information display mode, you can perform playback operations on the LCD monitor (playback operation screen).
Press the CLIPS button again to close the clip list screen and return to the shooting screen.
The thumbnails (reduced images) on the clip list screen support touch operation.

Note

- Of the clips displayed on the clip list screen, only those clips recorded in the currently selected recording format can be played back. If a clip cannot be played back, check the recording format.
- If you open the full menu while the clip list screen is displayed, the full menu will be displayed on the external monitor. Exercise caution when opening password-related settings.

Information for the clip at the cursor position is displayed at the bottom of the screen.

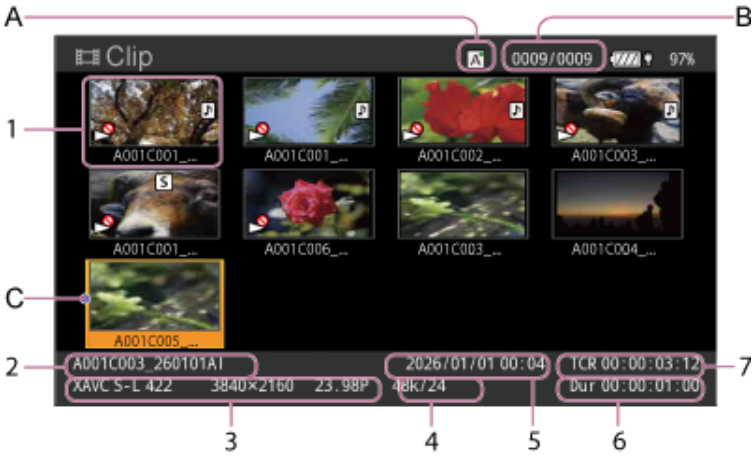

A: Currently selected memory card (a lock icon is displayed on the right if the card is protected)
B: Clip number/Total number of clips
C: Cursor (yellow)

1. **Thumbnail (reduced image)**
   Displays the index picture of a clip. When recording, the first frame of the clip is automatically set as the index picture. Clip/frame information is displayed below the thumbnail. You can change the information displayed using [Clip Operations] – [Customize View] – [Clips Caption] in the full menu. The clip status is also displayed as an icon.

Icon	Meaning
(Not playable)	Clip cannot be played back

2. **Clip name**
   Displays the name of the selected clip.

3. **Recording format during recording**
   Displays the file format of the selected clip.

4. **Special recording information**
   Displays the recording mode only if the clip was recorded using a special recording mode.

For clips recorded when [Shooting] – [FPS] – [Fixed/Variable Select] is set to [Variable] in the full menu, the frame rate is displayed on the right.

5. **Creation date**
6. **Duration of the clip**
7. **Timecode**

TP1002215337

5-076-802-11(2) Copyright 2026 Sony Corporation

Interchangeable Lens Digital Camera
ILME-FX5/ILME-FX5B

Playback Operation Screen

When the LCD monitor is in information display mode, you can select a clip to play on the clip list screen to display the playback operation screen. The function display area supports touch operation.

Function display area

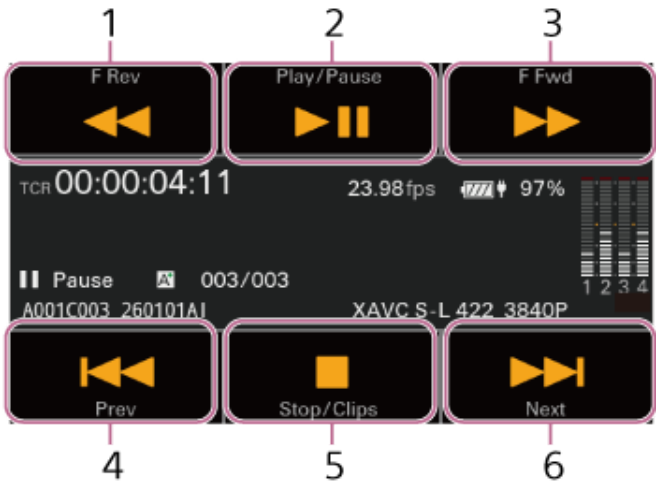

1. **[F Rev] button**
   Plays video in the reverse direction at high speed.
   Press the button repeatedly to switch between three speeds.

2. **[Play/Pause] button**
   Plays a clip or pauses clip playback.

3. **[F Fwd] button**
   Plays video in the forward direction at high speed.
   Press the button repeatedly to switch between three speeds.

4. **[Prev] button**
   Jumps to the start of a clip in the reverse direction.

5. **[Stop/Clips] button**
   Stops playback and returns to the clip list screen.

6. **[Next] button**
   Jumps to the start of a clip in the forward direction.

Status display area

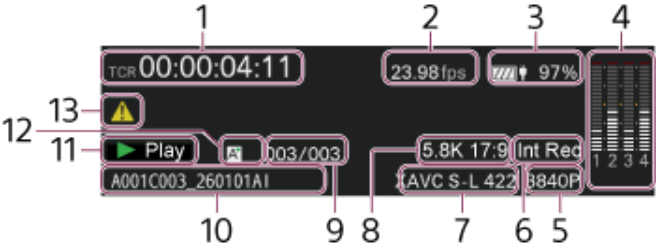

1. **Time data display**
   Displays the timecode of the playback position.

2. **Frame rate indicator**

Displays the frame rate of the playback clip.

3. **Power status indicator**
   Displays the remaining battery charge.

4. **Audio level meter**
   Displays the playback audio levels.

5. **Image resolution indicator**
   Displays the image resolution.

6. **Special recording mode indicator**
   Displays the special recording mode information of the playback clip.

7. **Codec name display**
   Displays the name of the codec.

8. **Image size indicator**
   Displays the image size.

9. **Clip number / Total number of clips indicator**
   Displays the current playback clip number / total number of playable clips.

10. **Clip name display**
    Displays the name of the clip.

11. **Playback status indicator**
    Displays the playback operating status.

12. **Media indicator**
    Displays the current playback media.
    A (Write-protected) icon is displayed on the right if the memory card is locked.

13. **Warning/error icon**
    Displayed when a warning or error occurs.
    You can check the content of warnings and errors by displaying the menu. If the screen display is superimposed on an external monitor, you can also check it on the external monitor.

TP1002295531

5-076-802-11(2) Copyright 2026 Sony Corporation

Playing a Clip

You can play recorded clips when the unit is in recording standby (Stby) mode.

1. **Insert the memory card to play.**
2. **Press the CLIPS button.**
   The clip list screen for the active playback media is displayed on the LCD monitor.
3. **Use the multi selector or multi-function dial to move the cursor to the clip you want to start playback.**
4. **Press the multi selector apply button or multi-function dial.**
   Playback begins from the start of the selected clip. You can also start playback by tapping the thumbnail (reduced image).

Note

- The unit does not perform continuous playback.

About playback operations

You can control playback using the following buttons.
Press the multi selector or multi-function dial, or tap the playback image:
Pauses playback.
Press again to resume normal playback.
Press the multi selector left/right buttons, or flick the playback image left/right:
Jumps to start of clip or the start of previous/next clip.
Press and hold the multi selector left/right buttons:
Fast reverse/forward.
Returns to normal playback when you release the button.
BACK button:
Pauses playback and returns to the shooting screen.
The shooting screen or Home screen appears.

To control playback using buttons on the playback operation screen

When the LCD monitor is in information display mode, playback can still be controlled using buttons on the playback operation screen.
[Play/Pause] button: Pauses playback. Press again to resume normal playback.
[Prev] button / [Next] button: Jumps to start of clip or the start of previous/next clip.
[F Fwd] button /[F Rev] button: Fast forward/reverse.
Press the [Play/Pause] button to return to normal playback.
[Stop/Clips] button: Stops playback and returns to the clip list screen.

Hint

- When viewing playback video on an external monitor, you can control playback using the playback operation screen and buttons on the LCD monitor.
- The playback operation screen appears when you press the CLIPS button to display the clip list screen from the Home screen and then select a clip.

Monitoring audio

In normal playback mode, you can monitor the recorded audio using the built-in speaker or headphones.
Connecting a set of headphones to the headphone connector turns off the built-in speaker.
Select the channel to monitor and adjust the volume using [Audio] – [Audio Output] – [Monitor CH] and [Volume] in the full menu.

[Headphone Live/Processed] setting

Set [Audio] – [Audio Output] – [Headphone Live/Processed] to [Live] in the full menu to output audio without latency. Select this when monitoring audio if concerned about audio delay.
Set to [Processed] to check the effects of the noise cut filter and zoom noise filter functions while monitoring the audio during shooting. The audio and video are synchronized for output.

Hint

- The unit supports a screen display/menu screen reader function.

Switching memory cards

When two memory cards are inserted, press an assignable button assigned with [Slot Select] on the clip list screen to switch cards.

Note

- You cannot switch the memory cards during playback. Also, continuous playback from card slot A to card slot B is not supported

Hint

- You can also assign [Slot Select] to [User 1] to [User 6] on the user functions screen.
- When a clip that was recorded in log shooting mode is played back, the LUT used when shooting is applied. The LUT to apply is determined from the saved 3D LUT file metadata information.
  If the clip was recorded when [Project] – [Base Setting] – [Cine EI/Flexible ISO Setting] – [Embed LUT File] is set to [On] in the full menu when shooting, that LUT is applied during playback if the 3D LUT file used when shooting is installed on the unit.
  If the clip was recorded when [Project] – [Base Setting] – [Cine EI/Flexible ISO Setting] – [Embed LUT File] is set to [Off] in the full menu when shooting, the LUT selected using [Paint/Look] – [Base Look] – [Select] in the full menu is applied during playback.
  The same LUT is applied if the 3D LUT file used when shooting is not installed on the unit.

TP1002215338

5-076-802-11(2) Copyright 2026 Sony Corporation

Interchangeable Lens Digital Camera
ILME-FX5/ILME-FX5B

Clip Operations

On the clip list screen, you can operate the clips or check clip properties using the [Clip Operations] menu in the full menu.

Menu items for clip operations

- [Display Clip Properties]
- [Set Clip Flag]
- [Lock/Unlock Clip]
- [Delete Clip]
- [Transfer Clip]
- [Transfer Clip (Proxy)]
- [Filter Clips]
- [Customize View]

Displaying clip properties

Select [Clip Operations] – [Display Clip Properties] in the full menu.
Press the multi selector left/right button to jump to the previous/next clip.

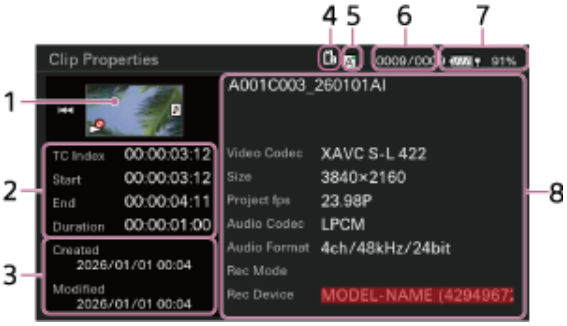

1. **Current clip image**
2. **Timecode display**
   [TC Index]: Timecode of clip
   [Start]: Timecode at the start of recording
   [End]: Timecode at the end of recording
   Duration: Duration of the clip

3. **Creation date/time and modified date/time**
4. **Currently selected memory card**
5. **Memory card write-protected icon**
6. **Clip number/Total number of clips**
7. **Battery icon**
8. **Clip information**
   Clip name/Recording format/Special recording mode/Storage device name

Adding clip flags

You can add clip flags (OK / NG / KP) to clips to filter the display of clips based on the clip flags.
Select the thumbnail for the clip to which you want to add a clip flag, then select the clip flag using [Clip Operations] – [Set Clip Flag] in the full menu.

Setting	Added clip flag
[Add OK]	OK
[Add NG]	NG

Setting	Added clip flag
[Add KEEP]	KP

Hint

- You can also use an assignable button assigned with the clip flag function to add clip flags.
- You can also assign the clip flag function to [User 1] to [User 6] on the user functions screen.

Filtering the clip display

Select [Clip Operations] – [Filter Clips] in the full menu, and select a clip flag type to display only those clips that have the specified flag.
To display all clips, select [All].

Hint

- You can also switch between filters in sequence by pressing an assignable button assigned with [Display] or pressing the USER button.

Deleting clips

You can delete clips from a memory card.
Select [Clip Operations] – [Delete Clip] – [Select Clip] / [All Clips] in the full menu.
[Select Clip]: Deletes the selected clip. Multiple clip selection is supported.
[All Clips]: Deletes all of the displayed clips.

Transferring a clip to a server on the Internet or to a server on the local network

For details, see the following topics.
Preparing to Transfer Files
Selecting and Transferring a Clip

Changing information of the clip list screen

You can change the clip/frame information displayed below the thumbnail.
Select [Clip Operations] – [Customize View] – [Clips Caption] in the full menu, and select the information to display.
[Clip Name]: Clip name
[Date Time]: Date and time the clip was created and last modified
[Time Code]: Timecode
[Duration]: Duration
[Sequential Number]: Thumbnail number

Related Topic

- [TC/Media] Menu

TP1002215339

5-076-802-11(2) Copyright 2026 Sony Corporation

Searching for Functions from the Full Menu List

Press and hold the MENU button to display the full menu on the LCD monitor/viewfinder to specify various items for shooting and playback. You can display the menu on an external video monitor.

Menu name	Description
[Shooting] Menu	Contains settings related to shooting.
[Project] Menu	Contains basic project settings.
[Paint/Look] Menu	Contains settings related to image quality.
[TC/Media] Menu	Contains settings related to timecodes and memory cards.
[Monitoring] Menu	Contains settings related to video output and the viewfinder display.
[Audio] Menu	Contains settings related to audio.
[Clip Operations] Menu	Contains settings related to clip operations.
[Technical] Menu	Contains settings for technical items.
[Network] Menu	Contains settings related to networks.
[Maintenance] Menu	Contains devices settings, such as the clock and language.

Full menu hierarchy

[Shooting] Menu	[ISO/Gain]
	[Exposure Index]
	[Shutter]
	[Auto Exposure]
	[White Balance]
	[White Balance Setting]
	[Focus]
	[FPS]
	[LUT On/Off]
	[Noise Suppression]
	[Flicker Reduce]
	[Image Stabilization]

[Project] Menu	[Base Setting]
	[Rec Format]
	[Anamo. De-Squeeze]
	[HDR Setting]
	[Simul Rec]
	[Proxy Rec]
	[Interval Rec]
	[HDMI Rec Trigger]
	[Assignable Button]
	[Assignable Dial]
	[Multi Function Dial]
	[All File]
[Paint/Look] Menu	[Scene File]
	[Base Look]
	[Reset Paint Settings]
	[Black]
	[Black Gamma]
	[Knee]
	[Detail]
	[Matrix]
	[Multi Matrix]
[TC/Media] Menu	[Timecode]
	[TC Display]
	[Users Bit]
	[HDMI TC Out]
	[Clip Name Format]
	[Update Media]
	[Format Media]

[Monitoring] Menu	[Output On/Off]
	[Output Format]
	[Output Display]
	[Display On/Off]
	[Frame Line]
	[LCD Monitor Setting]
	[VF Setting] *Displayed only when a viewfinder (sold separately) is attached.
	[Gamma Display Assist]
	[Focus Map]
	[Peaking]
	[Zebra]
	[Focus Magnifier]
[Audio] Menu	[Audio Rec Format]
	[32bit float WAV Rec]
	[Audio Input]
	[Audio Output]
[Clip Operations] Menu	[Display Clip Properties]
	[Set Clip Flag]
	[Lock/Unlock Clip]
	[Delete Clip]
	[Transfer Clip]
	[Transfer Clip (Proxy)]
	[Filter Clips]
	[Customize View]

[Technical] Menu	[Exposure Assist]
	[Test Signals]
	[Alerts & Tally]
	[Key Lock]
	[Touch Operation]
	[Rec Review]
	[Zoom]
	[Zoom Lever Speed]
	[Bluetooth Zoom]
	[GPS]
	[Menu Settings]
	[USB]
	[Fan Control]
	[Lens]
	[Auto Pixel Restore]
	[Sensor Cleaning]
	[Power Settings]
[Network] Menu	[Network Setup]
	[Wireless LAN]
	[Wired LAN]
	[USB Tethering]
	[Bluetooth]
	[File Transfer]
	[Stream]
	[Network Reset]
[Maintenance] Menu	[Language]
	[Accessibility]
	[Clock Set]
	[All Reset]
	[Hours Meter]
	[Firmware]

TP1002215340

5-076-802-11(2) Copyright 2026 Sony Corporation

Full Menu Operations

You can display and operate the full menu using the following methods.

MENU button

Press and hold to display the full menu. Press again while the full menu is displayed to return to the previous screen.

Multi selector

Press the 8-way D-pad buttons to move the cursor up/down/left/right to select menu items or settings.
Press the multi selector to apply the selected item.

Multi-function dial

Turn the multi-function dial to move the cursor up/down to select menu items or settings.
Press the multi-function dial to apply the selected item.

BACK button

Press to return to the previous level. An uncompleted change is canceled.

Touch operation

You can select menu items and settings using touch operation.

Note

- Some items may not be selectable, depending on the state when the menu was displayed.
- Touch operation is not available when [Technical] – [Touch Operation] – [Setting] is set to [Off] in the full menu.

Setting menu items

Press the 8-way multi selector or turn the multi-function dial to move the cursor to the menu item you want to set, then press the multi selector or multi-function dial to apply the selection. When using touch operation, tap the item you want to configure.

- The menu item selection options area displays up to eight lines. If the available options for an item cannot be displayed at the same time, scroll the display by moving the cursor up/down. When using touch operation, flick the screen up/down to display the selection options.
- For sub-items with a large settings range (for example, −99 to +99), the selection options area is not displayed. The current setting is highlighted to indicate that the value can be changed.
- Selecting [Execute] for a function will execute the corresponding function.
- Selecting an item that requires confirmation before execution will temporarily hide the menu and display a confirmation message. Check the message, and then select whether to execute or cancel the function.

TP1002215341

5-076-802-11(2) Copyright 2026 Sony Corporation

Interchangeable Lens Digital Camera
ILME-FX5/ILME-FX5B

Entering a Character String

When you select an item that requires character entry, such as a file name, the character entry screen appears.

1. **Select the character type you want to enter using touch operation or the multi-function dial/multi selector, then apply the setting.**

   You can move the cursor by tapping or dragging left/right.
   [ABC]: Uppercase alphabetic characters
   [abc]: Lowercase alphabetic characters
   [123]: Numeric characters
   [!#$]: Special characters

2. **Select a character from the selected character type, then apply the setting.**

   The cursor moves to the next field.
   ␣: Enters a space character at the cursor position.
   ←/→: Moves the position of the cursor.
   ⌫: Deletes the character on the left of the cursor.

3. **When finished, select [Done] to apply the setting.**

   The character string is confirmed and the character entry screen disappears.
   To cancel, select [Cancel].

Note

- When entering a password, a button to show/hide characters will be displayed. This switches the display between asterisks and normal text.

TP1002215342

5-076-802-11(2) Copyright 2026 Sony Corporation

Interchangeable Lens Digital Camera
ILME-FX5/ILME-FX5B

Using the Screen Reader

You can use the screen reader function to read aloud the text and other information on the screen.

Enabling the screen reader

Set [Maintenance] – [Accessibility] – [Screen Reader] – [Setting] to [On] in the full menu.

Hint

- The screen reader audio is output to the speaker of the unit or headphones.

Setting the screen reader speed

Set the speed using [Maintenance] – [Accessibility] – [Screen Reader] – [Speed] in the full menu.

Setting the screen reader volume

Set the volume using [Maintenance] – [Accessibility] – [Screen Reader] – [Volume] in the full menu.

Enabling/disabling the screen reader at startup

Set [Maintenance] – [Accessibility] – [Screen Reader] – [Read Out when Power On] to [Enable] / [Disable] in the full menu.
[Enable]: Screen reader is turned on if you press and hold the MENU button and turn the unit on.
[Disable]: Screen reader is turned off when you turn the unit on.

Note

- Press and hold the MENU button until the screen reader audibly starts.
- [Read Out when Power On] is set to [Enable] by factory default. If you do not use the screen reader function on the initial setup screen, the function is automatically set to [Disable] when the initial setup screen is closed.

TP1002215345

5-076-802-11(2) Copyright 2026 Sony Corporation

Interchangeable Lens Digital Camera
ILME-FX5/ILME-FX5B

Magnifying the Screen Display

You can magnify the shooting screen, playback screen, and menu screen display.
If you press an assignable button assigned with the screen magnifier function, the screen is magnified according to the magnification factor setting.

Note

- Some screens and objects on the display are not magnified.
- The shooting image and playback image are not displayed enlarged. Use the focus magnifier function to enlarge the shooting image.

Enabling the screen magnifier function

1. **Set [Maintenance] – [Accessibility] – [Enlarge Screen] – [Setting] to [Enable] in the full menu.**
   A confirmation message appears.

2. **Select [Execute].**
   The screen magnifier function is enabled and assigned to assignable button 4.

Setting the magnification factor

Set the magnification factor using [Maintenance] – [Accessibility] – [Enlarge Screen] – [Magnification] in the full menu.
You can select multiple magnification factors to suit the shooting conditions and display content.

Setting the screen magnifier button

You can change the button to which the screen magnifier function is assigned.
Set using [Maintenance] – [Accessibility] – [Enlarge Screen] – [Enlarge Screen Button] in the full menu.
You can assign the screen magnifier function to assignable button 1 to assignable button 6, VF/LCD toggle button, or focus hold button.

Hint

- You can also assign the screen magnifier function to an assignable button using [Project] – [Assignable Button] in the full menu.

Note

- When all [Assignable Button] – [Enlarge Screen] assignments are cleared, [Maintenance] – [Accessibility] – [Enlarge Screen] – [Setting] is set to [Disable] in the full menu.
- When [Accessibility] – [Enlarge Screen] – [Setting] is set to [Disable], the settings of all assignable buttons assigned with [Assignable Button] – [Enlarge Screen] return to their factory default assignment.
- If the screen magnifier function is assigned to a button using [Assignable Button] when [Accessibility] – [Enlarge Screen] – [Setting] is set to [Disable], then [Enlarge Screen] – [Setting] is set to [Enable].

Screen magnifier operation

- The screen is magnified by pressing a button assigned with the screen magnifier function.
- During screen magnifier operation, you can move the display position using the multi selector or using touch operation (dragging). Use the multi-function dial to perform menu and message operations.
- Each time you press a button assigned with the screen magnifier function, the [Magnification] settings are switched between No magnification → Magnification 1 → Magnification 2 → … → No magnification in that order.
- To exit the screen magnifier function, press the button repeatedly to return to the normal screen display.

TP1002215346

5-076-802-11(2) Copyright 2026 Sony Corporation

[Shooting] Menu

The following tables describe the function and settings of each menu item.

[Shooting] – [ISO/Gain]

Sets settings related to gain.

Menu item	Sub-item setting	Factory default value	Description
[Mode]	[ISO] / [dB]	[ISO]	Selects the gain setting mode. **Note** • In log shooting mode, this is set to [ISO] (fixed).
[ISO/Gain Select]	For details about settings, see the following topic. [ISO/Gain] Settings and Default Values	–	Sets the gain.
[Shockless Gain]	[On] / [Off]	[Off]	Turns the shockless gain on/off.
[Base Sensitivity]	[High] / [Mid] / [Low] / [Low(Dual Gain)]	[Low]	Sets the base sensitivity for custom shooting mode.
[Base ISO]	[ISO 12800] / [ISO 4000] / [ISO 800] / [ISO 800(Dual Gain)]	[ISO 800]	Sets the base ISO sensitivity for log shooting mode ([Cine EI] / [Flexible ISO]). **Note** • This setting is display-only in [Cine EI Quick] mode. The setting is linked to the EI gain setting.

[Shooting] – [Exposure Index]

Sets settings related to the exposure index.

Menu item	Sub-item setting	Factory default value	Description
[EI Select]	**In [Cine EI] mode with [Base ISO] set to [ISO 800(Dual Gain)] / [ISO 800]:** 200EI / 4.0E 250EI / 4.3E 320EI / 4.7E 400EI / 5.0E 500EI / 5.3E 640EI / 5.7E 800EI / 6.0E 1000EI / 6.3E 1250EI / 6.7E 1600EI / 7.0E 2000EI / 7.3E 2500EI / 7.7E 3200EI / 8.0E **In [Cine EI] mode with [Base ISO] set to [ISO 4000]:** 1000EI / 4.0E 1250EI / 4.3E 1600EI / 4.7E 2000EI / 5.0E 2500EI / 5.3E 3200EI / 5.7E 4000EI / 6.0E 5000EI / 6.3E 6400EI / 6.7E 8000EI / 7.0E 10000EI / 7.3E 12800EI / 7.7E 16000EI / 8.0E **In [Cine EI] mode with [Base ISO] set to [ISO 12800]:** 3200EI / 4.0E 4000EI / 4.3E 5000EI / 4.7E 6400EI / 5.0E 8000EI / 5.3E 10000EI / 5.7E 12800EI / 6.0E 16000EI / 6.3E 20000EI / 6.7E 25600EI / 7.0E 32000EI / 7.3E 40000EI / 7.7E 51200EI / 8.0E **In [Cine EI Quick] mode:** 200EI / 4.0E 250EI / 4.3E 320EI / 4.7E 400EI / 5.0E 500EI / 5.3E 640EI / 5.7E 800EI / 6.0E 1000EI / 6.3E 1250EI / 6.7E 1600EI / 7.0E 2000EI / 5.0E 2500EI / 5.3E 3200EI / 5.7E	–	Sets the EI gain value for log shooting mode ([Cine EI] / [Cine EI Quick]).

Menu item	Sub-item setting	Factory default value	Description
	4000EI / 6.0E 5000EI / 6.3E 6400EI / 6.7E 8000EI / 5.3E 10000EI / 5.7E 12800EI / 6.0E 16000EI / 6.3E 20000EI / 6.7E 25600EI / 7.0E 32000EI / 7.3E 40000EI / 7.7E 51200EI / 8.0E		

[Shooting] – [Shutter]

Sets electronic shutter operation.

Menu item	Sub-item setting	Factory default value	Description
[Mode]	[Speed] / [Angle]	[Angle]	Selects the mode of the electronic shutter. Used for shooting fast-moving subjects clearly. Select [Speed] mode for setting the shutter speed as a time in seconds or [Angle] mode for setting the shutter speed as a shutter angle.
[Step/Continuous Select]	[Step] / [Continuous]	[Step]	Selects the shutter speed setting method.
[Angle (Step)]	64F / 32F / 16F / 8F / 7F / 6F / 5F / 4F / 3F / 2F / 360.0° / 300.0° / 270.0° / 240.0° / 216.0° / 210.0° / 180.0° / 172.8° / 150.0° / 144.0° / 120.0° / 90.0° / 86.4° / 72.0° / 45.0° / 30.0° / 22.5° / 11.25° / 5.6°	180.0°	Sets a preset shutter angle when [Angle] mode is selected. **Note** • When the project frame rate is 100P or 119.88P, 2F to 64F cannot be selected.
[Angle (Continuous)]	360.0° to 4.2°	180.0°	Sets a continuous shutter angle when [Angle] mode is selected.
[Shutter Speed On/Off]	[On] / [Off]	[Off]	Sets whether the exposure time when [Speed] mode is selected follows the [Speed (Step)] / [Speed (Continuous)] setting or is set for full exposure.

Menu item	Sub-item setting	Factory default value	Description
[Speed (Step)]	64F to 1/8000 The available settings vary depending on the project frame rate of the selected recording format. 119.88P: 1/120 / 1/125 / 1/250 / 1/500 / 1/1000 / 1/2000 / 1/4000 / 1/8000 100P: 1/100 / 1/120 / 1/125 / 1/250 / 1/500 / 1/1000 / 1/2000 / 1/4000 / 1/8000 59.94P: 64F / 32F / 16F / 8F / 7F / 6F / 5F / 4F / 3F / 2F / 1/60 / 1/100 / 1/120 / 1/125 / 1/250 / 1/500 / 1/1000 / 1/2000 / 1/4000 / 1/8000 50P: 64F / 32F / 16F / 8F / 7F / 6F / 5F / 4F / 3F / 2F / 1/50 / 1/60 / 1/100 / 1/120 / 1/125 / 1/250 / 1/500 / 1/1000 / 1/2000 / 1/4000 / 1/8000 29.97P: 64F / 32F / 16F / 8F / 7F / 6F / 5F / 4F / 3F / 2F / 1/30 / 1/40 / 1/50 / 1/60 / 1/100 / 1/120 / 1/125 / 1/250 / 1/500 / 1/1000 / 1/2000 / 1/4000 / 1/8000 25P: 64F / 32F / 16F / 8F / 7F / 6F / 5F / 4F / 3F / 2F / 1/25 / 1/33 / 1/50 / 1/60 / 1/100 / 1/120 / 1/125 / 1/250 / 1/500 / 1/1000 / 1/2000 / 1/4000 / 1/8000 24P, 23.98P: 64F / 32F / 16F / 8F / 7F / 6F / 5F / 4F / 3F / 2F / 1/24 / 1/32 / 1/48 / 1/50 / 1/60 / 1/96 / 1/100 / 1/120 / 1/125 / 1/250 / 1/500 / 1/1000 / 1/2000 / 1/4000 / 1/8000	119.88P: 1/120 100P: 1/100 59.94P: 1/60 50P: 1/50 29.97P: 1/30 25P: 1/25 24P, 23.98P: 1/24	Sets the shutter speed when [Speed] mode is selected. **Note** - When the project frame rate is 100P or 119.88P, 2F to 64F cannot be selected.
[Speed (Continuous)]	1/23.99 to 1/8000	–	Sets the shutter speed (fine adjustment) when [Speed] mode is selected.

[Shooting] – [Auto Exposure]

Sets automatic exposure adjustment settings.

Menu item	Sub-item setting	Factory default value	Description
[Level]	+3.0 / +2.75 / +2.5 / +2.25 / +2.0 / +1.75 / +1.5 / +1.25 / +1.0 / +0.75 / +0.5 / +0.25 / ±0 / −0.25 / −0.5 / −0.75 / −1.0 / −1.25 / −1.5 / −1.75 / −2.0 / −2.25 / −2.5 / −2.75 / −3.0	±0	Sets the brightness level for the automatically detected exposure.

Menu item	Sub-item setting	Factory default value	Description
[Mode]	[Backlight] / [Standard] / [Spotlight]	[Standard]	Sets the operating mode of auto exposure adjustment. [Backlight]: Mode for reduced darkening of shadows when the subject is backlit. [Standard]: Standard mode [Spotlight]: Mode for reduced clipped whites when subject is lit by spotlighting
[Speed]	−99 to +99	±0	Sets the adjustment speed of auto exposure adjustment.
[AGC]	[On] / [Off]	[Off]	Turns auto gain control on/off.
[AGC Limit]	For details about settings, see the following topic. [AGC Limit] Settings and Default Values	–	Sets the maximum gain of the auto gain control.
[AGC Point]	F2.8 / F4 / F5.6	F2.8	Sets the F-number of the iris where auto gain control operation starts when [AGC] is set to [On].
[Auto Shutter]	[On] / [Off]	[Off]	Turns auto shutter on/off.
[A.SHT Limit]	1/100 / 1/150 / 1/200 / 1/250 / 1/2000	1/2000	Sets the fastest shutter speed of the auto shutter.
[A.SHT Point]	F5.6 / F8 / F11 / F16	F11	Sets the F-number of the iris where auto shutter operation starts when [Auto Shutter] is set to [On].
[Clip High light]	[On] / [Off]	[Off]	Turns the function that ignores brightest areas to provide a flatter response at high luminance on/off.
[Detect Window]	1 / 2 / 3 / 4 / 5 / 6 / [Custom]	1	Sets the light metering range for automatically adjusting the exposure according to the brightness of the subject. (Not available when adjusting exposure manually)
[Detect Window Indication]	[On] / [Off]	[Off]	Turns the light metering range indication on/off.
[Custom Width]	40 to 999	500	Sets the width of the light metering range.
[Custom Height]	70 to 999	500	Sets the height of the light metering range.
[Custom H Position]	−479 to +479	±0	Sets the horizontal position of the light metering range.
[Custom V Position]	−464 to +464	±0	Sets the vertical position of the light metering range.

[Shooting] – [White Balance]

Sets white balance settings.

Menu item	Sub-item setting	Factory default value	Description
[White Select]	A / B / C / D / E / F / G / H	A	Selects the white memory position.
[Auto White Balance]	[Execute] / [Cancel]	–	Executes auto white balance for the selected white memory position. [Execute]: Execute function.
[ATW]	[On] / [Off]	[Off]	Turns the ATW function on/off. **Note** ● When the white memory position is changed, [ATW] is set to [Off].
[Color Temp. Select]	2000K to 15000K	3200K	Sets the white balance color temperature saved in the selected white memory position. **Note** ● Since [Color Temp] is clipped at 2000K and 15000K during [R Gain] / [B Gain] adjustment, it may not be possible to display the correct [Color Temp] value for the R/B gain value.
[Tint]	−99 to +99	±0	Sets the white balance [Tint] value saved in the selected white memory position. **Note** ● Since [Tint] is clipped at ±99 during [R Gain] / [B Gain] adjustment, it may not be possible to display the correct [Tint] value for the R/B gain value.
[R Gain]	−99.0 to +99.0	±0.0	Sets the white balance R gain value saved in the selected white memory position.
[B Gain]	−99.0 to +99.0	±0.0	Sets the white balance B gain value saved in the selected white memory position.
[Set to Preset Value]	● **In [Custom] mode:** 3200K ±00 4300K ±00 5600K ±00 6300K ±00 [Cancel] ● **In [Cine EI] mode:** 3200K ±00 4300K ±00 5500K ±00 [Cancel]	[Cancel]	Sets the white balance color temperature saved in the selected white memory position to a preset value. The [Tint] value is set to ±0.0.

[Shooting] – [White Balance Setting]

Adjusts white balance settings.

Menu item	Sub-item setting	Factory default value	Description
[Shockless White]	[Off] / 1 / 2 / 3	2	Sets the white balance response speed when switching white balance mode. [Off]: Switches instantaneously. 1 to 3: Switches more slowly the higher the number.
[ATW Speed]	1 / 2 / 3 / 4 / 5	3	Sets the response speed in auto white mode. 1: Fastest response speed

[Shooting] – [Focus]

Sets focus settings.

Menu item	Sub-item setting	Factory default value	Description
[Focus Operation]	[Auto Focus] / [Manual Focus]	[Auto Focus]	Sets the basic focus operation when the lens is in the auto focus enabled state.
[AF Transition Speed]	[1(Slow)] / 2 / 3 / 4 / 5 / 6 / [7(Fast)]	5	Sets the speed of the focus drive for when the subject changes during auto focus.
[AF Subj. Shift Sens.]	[1(Locked On)] / 2 / 3 / 4 / [5(Responsive)]	[5(Responsive)]	Sets the sensitivity for changing subject focus during auto focus.
[Focus Area]	[Wide] / [Zone] / [Flexible Spot]	[Wide]	Sets the target area for auto focus and push auto focus. [Wide]: Searches for a focus position with focus over a wide angle of the image. [Zone]: Automatically searches for a focus point within the specified zone. [Flexible Spot]: Focuses on a specified position in the image.

Menu item	Sub-item setting	Factory default value	Description
[Subject Recognition AF]	[Human Only AF] / [Human Priority AF] / [Animal/Bird Prio. AF] / [Animal Priority AF] / [Bird Priority AF] / [Off]	[Human Priority AF]	Sets the mode of the subject recognition AF function. [Human Only AF]: The camera detects subjects (people) and focuses on their face, eyes, head, or body. Auto focus operation is paused while a person is not detected. [Human Priority AF]: The camera detects subjects (people) and focuses on their face, eyes, head, or body. When a face/eye/head/body is not detected, the unit automatically determines the optimum position within the image and maintains the focus on that position. [Animal/Bird Prio. AF]: The camera detects the eyes/head/body of subjects (animals and birds) and prioritizes focusing on the eyes/head/body of animals and birds. When an eye/head/body is not detected, the unit automatically determines the optimum position within the image and maintains the focus on that position. [Animal Priority AF]: The camera detects the eyes/head/body of subjects (animals) and prioritizes focusing on the eyes/head/body of animals. When an eye/head/body is not detected, the unit automatically determines the optimum position within the image and maintains the focus on that position. [Bird Priority AF]: The camera detects the eyes/head/body of subjects (birds) and prioritizes focusing on the eyes/head/body of birds. When an eye/head/body is not detected, the unit automatically determines the optimum position within the image and maintains the focus on that position. [Off]: The subject recognition AF function is disabled.
[Recognition Target Select]	[Human Priority AF] / [Human Only AF] / [Animal/Bird Prio. AF] / [Animal Priority AF] / [Bird Priority AF]	All options have check mark	Selects the operation of the subject recognition AF function when an assignable button assigned with [Subject Recognition AF] is pressed. Configure setting using the checkbox.
[Touch Function in MF]	[Tracking AF] / [Spot Focus]	[Tracking AF]	Sets the touch operation mode during manual focus.
[Multi Selector Function]	[Subject Sel. Cursor] / [Pointer]	[Subject Sel. Cursor]	Sets the method for specifying the auto focus target in response to multi selector operation. [Subject Sel. Cursor]: Selects a subject recognition frame using the multi selector. [Pointer]: Selects a subject on the screen by moving the tracking AF pointer using the multi selector.
[Pointer Color]	[Orange] / [White] / [Yellow] / [Cyan] / [Green] / [Magenta] / [Red] / [Blue]	[Orange]	Sets the color of the pointer used for specifying the focus target.
[Pointer Border]	[On] / [Off]	[On]	Turns the border of the pointer used for specifying the focus target on/off.
[AF Assist]	[On] / [Off]	[On]	When set to [On], this allows you to temporarily override auto focus and set focus manually.
[Lens Action If Cannot AF]	[Continue Focus Search] / [Stop Focus Search]	[Stop Focus Search]	Sets the lens operation when auto focus is started and the subject is significantly out of focus or when auto focus cannot achieve focus.

[Shooting] – [FPS]

Sets whether the shooting frame rate and project frame rate are set to different frame rates.
You can shoot video in slow motion/quick motion by setting the shooting frame rate and project frame rate to different frame rates.
The playback speed of slow motion/quick motion is determined by the shooting frame rate and project frame rate.

Menu item	Sub-item setting	Factory default value	Description
[Fixed/Variable Select]	[Fixed] / [Variable]	[Fixed]	Selects whether the frame rate is set for fixed speed shooting or variable speed shooting. **Note** • When [Variable] is selected, the video will be either slow motion or quick motion. • Audio is not recorded. • Auto shutter is disabled.
[FPS Select]	1fps to 60fps / 66fps / 72fps / 75fps / 88fps / 90fps / 96fps / 100fps / 110fps / 120fps / 150fps / 180fps / 200fps / 240fps	–	Selects the shooting frame rate. **Note** • The range of settings will vary depending on the selected project frame rate, imager mode, codec, and video format.

[Shooting] – [LUT On/Off]

Sets LUT settings.

Menu item	Sub-item setting	Factory default value	Description
[1 HDMI]	[LUT On] / [LUT Off]	[LUT Off]	Selects whether to apply a monitor LUT to the HDMI output video. **Note** • Configurable in log shooting mode.
[2 Proxy/Remote Live View]	[LUT On] / [LUT Off]	[LUT Off]	Selects whether to apply a monitor LUT to the proxy and remote live view output video. **Note** • Configurable in log shooting mode.

Menu item	Sub-item setting	Factory default value	Description
[3 LCD Monitor/VF]	[LUT On] / [LUT Off]	[LUT Off]	Selects whether to apply a monitor LUT to the LCD monitor and viewfinder output video. **Note** • Configurable in log shooting mode. • When [2 Proxy/Remote Live View] is set to [LUT On], this setting is set to [LUT On] (fixed).

[Shooting] – [Noise Suppression]

Sets noise suppression settings.
The noise suppression function of the unit is turned on by default for both custom shooting and log shooting modes. This function effectively reduces noise, but may cause a loss of detail and texture in the image depending on the settings. If you want to retain more video information, we recommend weakening the noise suppression effect or turning off the function.

Hint

- The [Setting(Custom)] and [Level(Custom)] settings are reflected in the [Target Display] setting.

Note

- The noise suppression effect varies depending on the shooting conditions and mode.

Menu item	Sub-item setting	Factory default value	Description
[Setting(Custom)]	[On] / [Off]	[On]	Turns the noise suppression function on/off in custom shooting mode. **Note** • This function cannot be configured in log shooting mode.
[Level(Custom)]	[Low] / [Mid] / [High]	[Mid]	Sets the noise suppression level in custom shooting mode. **Note** • This function cannot be configured in log shooting mode.
[Setting (Cine EI/Flex. ISO)]	[On] / [Off]	[On]	Turns the noise suppression function on/off in log shooting mode. **Note** • This function cannot be configured in custom shooting mode.

Menu item	Sub-item setting	Factory default value	Description
[Level (Cine EI/Flex. ISO)]	[Low] / [Mid] / [High]	[Mid]	Sets the noise suppression level in log shooting mode. **Note** - This function cannot be configured in custom shooting mode.

[Shooting] – [Flicker Reduce]

Sets flicker correction settings.

Menu item	Sub-item setting	Factory default value	Description
[Mode]	[Auto] / [On] / [Off]	[Off]	Sets the flicker correction mode.
[Frequency]	[50Hz] / [60Hz]	[60Hz] / [50Hz] The default value varies depending on the country or region of purchase.	Sets the frequency of the power source supplying the lighting that is causing the flicker.

[Shooting] – [Image Stabilization]

Sets settings related to image stabilization.

Menu item	Sub-item setting	Factory default value	Description
[SteadyShot]	[Dynamic Active] / [Active] / [Standard] / [Off]	[Standard]	Sets the image stabilization function. **Note** - If a lens with an image stabilization switch is attached and the lens switch is set to the OFF position, this setting cannot be changed on the unit as the lens setting has precedence.
[Stabilization Adjustment]	[Auto] / [Manual]	[Auto]	Sets the appropriate image stabilization function corresponding to the attached lens. [Auto]: Applies image stabilization automatically based on information obtained from the lens. [Manual]: Applies image stabilization for the focal length set using [Focal Length] (8 mm to 1000 mm).

Menu item	Sub-item setting	Factory default value	Description
[Focal Length]	8mm / 9mm / 10mm / 11mm / 12mm / 13mm / 14mm / 15mm / 16mm / 17mm / 18mm / 19mm / 20mm / 21mm / 24mm / 25mm / 28mm / 30mm / 32mm / 35mm / 40mm / 45mm / 50mm / 55mm / 60mm / 70mm / 75mm / 80mm / 85mm / 90mm / 100mm / 105mm / 120mm / 135mm / 150mm / 180mm / 200mm / 210mm / 250mm / 300mm / 350mm / 400mm / 450mm / 500mm / 600mm / 800mm / 1000mm	8mm	Sets the focal length information for the image stabilization function within the camera when [Stabilization Adjustment] is set to [Manual]. **Note** - Image stabilization may not operate correctly if focal length and other information cannot be obtained from the lens. Set [Stabilization Adjustment] to [Manual], then set [Focal Length] to match the attached lens. The configured image stabilization focal length value is displayed below the image stabilization icon.

TP1002215349

5-076-802-11(2) Copyright 2026 Sony Corporation

[Project] Menu

The following tables describe the function and settings of each menu item.

[Project] – [Base Setting]

Sets base settings.

Menu item	Sub-item setting	Factory default value	Description
[Shooting Mode]	[Custom] / [Flexible ISO] / [Cine EI Quick] / [Cine EI]	[Custom]	Sets the shooting mode.
[Target Display]	[SDR(BT.709)] / [HDR(HLG)]	[SDR(BT.709)]	Sets the video standard for recording/output in custom shooting mode.
[Cine EI/Flexible ISO Setting]			
[Input Color Space]	[S-Gamut3/SLog3] / [S-Gamut3.Cine/SLog3]	[S-Gamut3.Cine/SLog3]	Sets the color gamut for log shooting mode.
[Embed LUT File]	[On] / [Off]	[On]	Turns 3D LUT file (CUBE file) metadata recording on/off.

[Project] – [Rec Format]

Sets recording format settings.

Menu item	Sub-item setting	Factory default value	Description
[Project Frame Rate]	119.88 / 100 / 59.94 / 50 / 29.97 / 25 / 24 / 23.98	23.98	Selects the project frame rate.
[Imager Mode]	[FF 5K 3:2] / [FF 5K 17:9] / [FF 5K 16:9] / [FFc 4.5K 17:9] / [FFc 4.5K 16:9] / [FFc 3.8K 16:9] / [S35 3.2K 16:9]	[FF 5K 16:9]	Selects the imager size. **Hint** • [S35 3.2K 16:9] cannot be selected when the project frame rate is 24. • [FF 5K 3:2] / [FF 5K 17:9] / [FFc 4.5K 17:9] / [FFc 3.8K 16:9] cannot be selected when the project frame rate is 119.88 or 100.
[Internal Rec / RAW Out]	[Internal Rec Only] / [Int. Rec & RAW (HDMI)] / [RAW (HDMI) Only]	[Internal Rec Only]	Selects internal recording and external RAW output combination.
[Codec]	[X-OCN LT] / [X-OCN C1] / [X-OCN C2] / [XAVC HS-L 422] / [XAVC HS-L 420] / [XAVC S-I] / [XAVC S-L 422] / [XAVC S-L 420]	[XAVC S-L 422]	Sets the clip recording/playback codec.
[Video Format]	For details about settings, see the following topic. [Video Format] / [Quality] / [Bit Rate] Settings	–	Sets the recording format.

Menu item	Sub-item setting	Factory default value	Description
[Quality]	For details about settings, see the following topic. [Video Format] / [Quality] / [Bit Rate] Settings	–	Sets the recording bit rate.
[Bit Rate]	For details about settings, see the following topic. [Video Format] / [Quality] / [Bit Rate] Settings	–	Displays the recording bit rate.

[Project] – [Anamo. De-Squeeze]

Sets de-squeeze settings.

Menu item	Sub-item setting	Factory default value	Description
[Ratio]	[Off(1.0x)] / [1.3x] / [1.5x] / [1.6x] / [1.8x] / [2.0x]	[Off(1.0x)]	Sets the de-squeeze ratio for the image displayed on the specified output system when shooting with an anamorphic lens.

[Project] – [HDR Setting]

Sets HDR mode settings.

Note

- Configurable only when [Shooting Mode] is set to [Custom] and [Target Display] is set to [HDR(HLG)].

Menu item	Sub-item setting	Factory default value	Description
[LCD/VF SDR Preview]	[On] / [Off]	[Off]	In HDR mode, this turns the function that converts the LCD monitor/viewfinder image from HDR to SDR on/off when gamma display assist is enabled. **Hint** - When set to [On], [SDR Gain] is applied to the LCD monitor/viewfinder image.
[SDR Gain]	0dB to −15dB	−6dB	In HDR mode, this sets the [SDR Gain] setting that is applied to the LCD monitor/viewfinder when [LCD/VF SDR Preview] is set to [On].

[Project] – [Simul Rec]

Sets simultaneous recording mode settings.

Menu item	Sub-item setting	Factory default value	Description
[Setting]	[On] / [Off]	[Off]	Turns the simultaneous recording function on/off and sets the recording destination media.

[Project] – [Proxy Rec]

Sets proxy recording mode settings.

Menu item	Sub-item setting	Factory default value	Description
[Setting]	[On] / [Off]	[Off]	Turns proxy recording mode on/off.
[Proxy Format]	[HEVC 1920P (16M)] / [HEVC 1920P (9M)] / [AVC 1920P (9M)] / [AVC 1280P (6M)]	[AVC 1280P (6M)]	Sets the picture size for the proxy file. **Note** • The proxy recording formats that can be selected vary as follows depending on the main recording codec setting. – For X-OCN codecs, [AVC 1920P (9M)] can be selected. – For codecs other than X-OCN, [HEVC 1920P (16M)] / [HEVC 1920P (9M)] / [AVC 1280P (6M)] can be selected.
[Audio Channel]	[CH1/CH2] / [CH3/CH4]	[CH1/CH2]	Selects the audio channel to record to proxy data.

[Project] – [Interval Rec]

Sets interval recording settings.

Menu item	Sub-item setting	Factory default value	Description
[Setting]	[On] / [Off]	[Off]	Turns interval recording mode on/off.
[Interval Time]	1 / 2 / 3 / 4 / 5 / 6 / 7 / 8 / 9 / 10 / 15 / 20 / 30 / 40 / 50 (sec) 1 / 2 / 3 / 4 / 5 / 6 / 7 / 8 / 9 / 10 / 15 / 20 / 30 / 40 / 50 (min) 1 / 2 / 3 / 4 / 6 / 12 / 24 (hour)	1	Sets the video recording interval in interval recording mode when [Interval Rec] is set to [On].
[Number of Frames]	**When the recording frame rate is 100P/119.88P:** [4frames] / [12frames] / [24frames] **When the recording frame rate is 50P/59.94P:** [2frames] / [6frames] / [12frames] **For other settings:** [1frame] / [3frames] / [6frames] / [9frames]	**When the recording frame rate is 100P/119.88P:** [4frames] **When the recording frame rate is 50P/59.94P:** [2frames] **For other settings:** [1frame]	Sets the number of frames per take in interval recording mode when [Interval Rec] is set to [On].

[Project] – [HDMI Rec Trigger]

Sets HDMI recording control settings.

Menu item	Sub-item setting	Factory default value	Description
[Setting]	[On] / [Off]	[Off]	Turns recording start/stop control on/off for an external connected device via the HDMI output signal. **Note** • For control using the HDMI output signal, set [TC/Media] – [HDMI TC Out] – [Setting] to [On] in the full menu.

[Project] – [Assignable Button]

Sets function assignments to assignable buttons.
The functions that can be assigned vary depending on the button. For details, see “Assignable Buttons.”

Menu item	Sub-item setting	Description
<1> to <6> / [<VF/LCD>] / [Focus Hold Button] / [Grab Button] / [Grab Button (Half Press)] / [<User 1>] to [<User 6>]	[Off] / [Base ISO/Sensitivity] / [ISO/Gain] / [AGC] / [Push AGC] / [Iris] / [Auto Iris] / [Push Auto Iris] / [Shutter] / [Auto Shutter] / [AE Level/Mode] / [Backlight] / [Spotlight] / [Set to Preset Val.(Wht)] / [White Balance] / [Auto White Balance] / [ATW] / [ATW Hold] / [Focus Operation] / [AF Speed/Sens.] / [Focus Setting] / [AF Transition Speed] / [AF Subj. Shift Sens.] / [Subject Recognition AF] / [Single-shot AF(AF-S)] / [Push AF/Push MF] / [Focus Hold] / [LCD/VF Focus Mag] / [HDMI Focus Mag] / [FPS] / [LUT On/Off 1] / [LUT On/Off 2] / [LUT On/Off 3] / [Press & H Log 1] / [Press & H Log 2] / [Press & H Log 3] / [De-Squeeze Ratio] / [SteadyShot] / [Rec] / [Rec Review] / [Shot Mark1] / [Shot Mark2] / [Clip Flag OK] / [Clip Flag NG] / [Clip Flag Keep] / [Slot Select] / [Color Bars] / [Tally [Front]] / [CALL] / [DURATION/TC/U-BIT] / [Format Media(A)] / [Format Media(B)] / [Display] / [Lens Info] / [Output Display HDMI] / [Video Signal Monitor] / [Frame Line] / [LCD Monitor Brightness] / [VF Brightness] / [LCD/VF Adjust] / [VF/LCD] / [Gamma Display Assist] / [Focus Map] / [Peaking] / [Zebra] / [False Color] / [Volume] / [Clips] / [Touch Operation] / [Clear Image Zoom] / [Fan Control] / [Auto Pixel Restoration] / [Zoom Type] / [Stream] / [Auto Upload (Proxy)] / [Enlarge Screen] / [Direct Menu] / [Home] / [Menu]	Assigns functions to assignable buttons. [Base ISO/Sensitivity]: Switches the base sensitivity of the image sensor. [ISO/Gain]: Displays/exits the [ISO] / [Gain Mode] / [Value] direct menu. [AGC]: Turns auto gain control on/off. [Push AGC]: Enables auto gain control while the button is pressed. [Iris]: Selects the iris position setting. In video monitoring mode, press and hold to select the auto/manual iris setting. [Auto Iris]: Turns auto iris on/off. [Push Auto Iris]: Enables auto iris while the button is pressed. [Shutter]: Displays/exits the [Auto Shutter] / shutter value direct menu. [Auto Shutter]: Turns auto shutter on/off. [AE Level/Mode]: Displays/exits the auto exposure level/mode direct menu. [Backlight]: Switches between [Backlight] / [Standard]. [Spotlight]: Switches between [Spotlight] / [Standard]. [Set to Preset Val.(Wht)]: Switches the white balance preset mode value. [White Balance]: Displays/exits the WB mode/WB value direct menu. [Auto White Balance] Executes white balance automatically. [ATW]: Turns auto white mode on/off. [ATW Hold]: Pauses auto white operation. [Focus Operation]: Switches between auto focus and manual focus. [AF Speed/Sens.]: Switches the focus

Menu item	Sub-item setting	Description
		operation speed setting and focus change sensitivity setting. [Focus Setting]: Sets the focus area. [AF Transition Speed]: Switches the speed of the focus drive when changing subject focus. [AF Subj. Shift Sens.]: Sets the sensitivity when changing subject focus. [Subject Recognition AF]: Switches the subject recognition auto focus operation. [Single-shot AF(AF-S)]: When pressed, the auto focus operates at high speed temporarily, and the focus position is maintained once focus is achieved while the button is pressed. [Push AF/Push MF]: Activates auto focus while the button is pressed in manual focus mode. Activates manual focus while the button is pressed in auto focus mode. [Focus Hold]: Holds fixed focus while the button is pressed in auto focus mode. [LCD/VF Focus Mag]: Switches the magnification factor of the LCD monitor output and viewfinder output. [HDMI Focus Mag]: Switches the magnification factor of the HDMI output. [FPS]: Switches between [Fixed/Variable Select] / [Variable] / [Fixed] when pressed. Sets the shooting frame rate when pressed and held. [LUT On/Off 1]: Switches the [Shooting] – [LUT On/Off] – [1 HDMI] setting. [LUT On/Off 2]: Switches the [Shooting] – [LUT On/Off] – [2 Proxy/Remote Live View] setting.

Menu item	Sub-item setting	Description
		[LUT On/Off 3]: Switches the [3 LCD Monitor/VF] setting. [Press & H Log 1]: Sets [Shooting] – [LUT On/Off] – [1 HDMI] to [LUT Off] to enable log image quality without applying a LUT while the button is pressed. [Press & H Log 2]: Sets [Shooting] – [LUT On/Off] – [2 Proxy/Remote Live View] to [LUT Off] to enable log image quality without applying a LUT while the button is pressed. [Press & H Log 3]: Sets [Shooting] – [LUT On/Off] – [3 LCD Monitor/VF] to [LUT Off] to enable log image quality without applying a LUT while the button is pressed. [De-Squeeze Ratio]: Switches the de-squeeze display setting. [SteadyShot]: Switches the operation of the image stabilization function. [Rec]: Starts/stops recording. [Rec Review]: Turns the recording review function on/off. [Shot Mark1]: Adds shot mark1 to the currently recording or playing clip. [Shot Mark2]: Adds shot mark2 to the currently recording or playing clip. [Clip Flag OK]: Executes [Add OK]. Press twice to execute [Delete Clip Flag]. [Clip Flag NG]: Executes [Add NG]. Press twice to execute [Delete Clip Flag]. [Clip Flag Keep]: Executes [Add KEEP]. Press twice to execute [Delete Clip Flag]. [Slot Select]: Switches memory cards. [Color Bars]: Turns color bars on/off. [Tally [Front]]: Turns the recording/tally lamp (front)

Menu item	Sub-item setting	Description
		light/flashing on/off. [DURATION/TC/U-BIT]: Switches between [Time Code] / [Users Bit] / [Duration]. [Format Media(A)]: Formats the memory card in card slot A. [Format Media(B)]: Formats the memory card in card slot B. [Display]: Turns the screen display on/off. [Lens Info]: Switches the depth-of-field display. [Output Display HDMI]: Turns HDMI signal screen display output on/off. [Video Signal Monitor]: Switches the video signal monitor display (for example, waveform monitor). [Frame Line]: Turns markers on/off. [LCD Monitor Bright.]: Switches the brightness of the LCD monitor image. [VF Brightness]: Switches the brightness of the viewfinder. [LCD/VF Adjust]: Displays the level bars for adjusting the brightness of the LCD monitor/viewfinder screen. [VF/LCD]: Switches between the LCD monitor and viewfinder. [Gamma Display Assist]: Switches the gamma display assist function. [Focus Map]: Turns the focus map function on/off. [Peaking]: Turns peaking on/off. [Zebra]: Turns zebra on/off. [False Color]: Turns false color on/off. [Volume]: Adjusts the monitoring audio level of the headphones connector and built-in speaker. [Clips]: Displays/exits the clip list screen. [Touch Operation]: Turns

Menu item	Sub-item setting	Description
		touch operation on/off. [Clear Image Zoom]: Turns Clear Image Zoom on/off. [Fan Control]: Switches the fan control mode. [Auto Pixel Restoration]: Executes the automatic pixel restoration (automatic pixel noise reduction) function. [Zoom Type]: Switches the zoom operation. [Stream]: Turns streaming on/off. [Auto Upload (Proxy)]: Switches proxy file auto transfer between [On] / [Off]. [Enlarge Screen]: Switches the screen magnifier magnification. [Direct Menu]: Displays/exits the direct menu. [Home]: Displays the Home screen. [Menu]: Displays/exits the full menu.

[Project] – [Assignable Dial]

Sets assignable dial settings.

Menu item	Sub-item setting	Factory default value	Description
[Assignable Dial]	[Off] / [ISO/Gain/EI] / [IRIS] / [Auto Exposure Level] / [Audio Input Level] / [Multi Function Dial]	[IRIS]	Assigns the default function of the IRIS dial. [Off]: Disables assignable dial operation. [ISO/Gain/EI]: Adjusts the ISO/gain/EI. [IRIS]: Adjusts the iris. [Auto Exposure Level]: Adjusts the auto exposure level. [Audio Input Level]: Adjusts the audio recording level. [Multi Function Dial]: Functions as a multi-function dial.
[Assignable Dial Direction]	[Normal] / [Opposite]	[Normal]	Sets the rotation direction of the assignable dial. [Normal]: Rotation in the forward direction. [Opposite]: Rotation in the reverse direction.

[Project] – [Multi Function Dial]

Assigns functions to the multi-function dial.

Menu item	Sub-item setting	Factory default value	Description
[Default Function]	[Off] / [ISO/Gain/EI] / [IRIS] / [Auto Exposure Level] / [Audio Input Level]	[ISO/Gain/EI]	Assigns the default function of the multi-function dial. [Off]: Disables the multi-function dial operation. [ISO/Gain/EI]: Adjusts the ISO/gain/EI. [IRIS]: Adjusts the iris. [Auto Exposure Level]: Adjusts the auto exposure level. [Audio Input Level]: Adjusts the audio recording level.

[Project] – [All File]

Sets settings related to All files.

Menu item	Sub-item setting	Factory default value	Description
[Load from Media(B)]	[Execute] / [Cancel]	–	Loads All file settings from a memory card inserted into card slot B. [Execute]: Execute function.
[Save to Media(B)]	[Execute] / [Cancel]	–	Saves All file settings to a memory card inserted into card slot B. [Execute]: Execute function.
[File ID]	–	–	Assigns a name to the file.
[Load Network Data]	[On] / [Off]	[Off]	Sets whether to load [Network] menu settings information when [Load from Media(B)] is executed.

TP1002215350

5-076-802-11(2) Copyright 2026 Sony Corporation

[Paint/Look] Menu

The following tables describe the function and settings of each menu item.

[Paint/Look] – [Scene File]

Sets settings related to scene files.

Note

- Enabled in custom shooting mode only.

Menu item	Sub-item setting	Description
[Recall Internal Memory]	–	Loads a scene file stored in internal memory and applies the settings as the current image quality settings.
[Store Internal Memory]	–	Saves the current image quality state as a scene file in internal memory.
[Delete Internal Memory]	–	Deletes a scene file stored in internal memory.
[Preset Recall]	When [Target Display] – [SDR(BT.709)] is selected in custom shooting mode: [S-Cinetone] / [ITU709] / [709tone] When [Target Display] – [HDR(HLG)] is selected in custom shooting mode: [HLG Live] / [HLG Natural]	Applies preset image quality settings (non-rewritable) as the current image quality settings.
[Load from Media(B)]	–	Loads a scene file from a memory card into internal memory.
[Save to Media(B)]	–	Saves a scene file from internal memory to a memory card.
[File Name]	–	Displays/edits a scene file name.

[Paint/Look] – [Base Look]

Sets settings related to the base look.

Menu item	Sub-item setting	Factory default value	Description
[Select]	When [Target Display] – [SDR(BT.709)] is selected in custom shooting mode: [S-Cinetone] / [ITU709] / [709tone] / User 1 to User 16 When [Target Display] – [HDR(HLG)] is selected in custom shooting mode: [HLG Live] / [HLG Natural] / User 1 to User 16 In log shooting mode: [s709] / [709(800%)] / [S-Log3] / [ACESproxy] / [ACEScct] / [ACES1.0 709] / User 1 to User 16	When [Target Display] – [SDR(BT.709)] is selected in custom shooting mode: [ITU709] When [Target Display] – [HDR(HLG)] is selected in custom shooting mode: [HLG Live] In log shooting mode: [s709]	Selects a base look. **Hint** ● You can select from the following base looks when [Project] – [Base Setting] – [Cine EI/Flexible ISO Setting] – [Input Color Space] is set to [S-Gamut3/SLog3] in the full menu. – [ACESproxy] – [ACEScct] – [ACES1.0 709]
[Delete]	–	–	Deletes the selected base look.
[Delete All]	–	–	Deletes all base looks.
[Import from Media(B)]	[Execute] / [Cancel]	–	Imports a base look file from a memory card inserted into card slot B. [Execute]: Execute function.
[Input]	[S-Gamut3/SLog3] / [S-Gamut3.Cine/SLog3]	[S-Gamut3.Cine/SLog3]	Sets the input color gamut for the base look selected using [Select].
[Output]	[BT.709] / [HLG]	[BT.709]	Sets the output color gamut for the base look selected using [Select].
[AE Level Offset]	0EV / 1/3EV / 2/3EV / 1EV / 4/3EV / 5/3EV / 2EV	0EV	Sets the exposure reference value for the base look selected using [Select].

[Paint/Look] – [Reset Paint Settings]

Resets the [Paint/Look] menu settings, excluding the base look.

Note

- Enabled in custom shooting mode only.

Menu item	Sub-item setting	Description
[Reset without Base Look]	[Execute] / [Cancel]	Resets the [Paint/Look] menu settings, excluding the base look. [Execute]: Execute function.

[Paint/Look] – [Black]

Sets black settings.

Note

- Enabled in custom shooting mode only.

Menu item	Sub-item setting	Factory default value	Description
[Master Black]	−99.0 to +99.0	±0.0	Sets the master black level.
[R Black]	−99.0 to +99.0	±0.0	Sets the R black level.
[B Black]	−99.0 to +99.0	±0.0	Sets the B black level.

[Paint/Look] – [Black Gamma]

Sets black gamma settings.

Menu item	Sub-item setting	Factory default value	Description
[Setting]	[On] / [Off]	[Off]	Turns the black gamma correction function on/off.
[Range]	[Low] / [L.Mid] / [H.Mid]	[L.Mid]	Sets the black gamma correction valid range.
[Master Black Gamma]	−7 to ±0 to +7	±0	Sets the master black gamma level.

[Paint/Look] – [Knee]

Sets knee correction settings.

Note

- Enabled in custom shooting mode only.

Menu item	Sub-item setting	Factory default value	Description
[Setting]	[On] / [Off] / ---	When [Target Display] – [SDR(BT.709)] is selected: [On] When [HDR(HLG)] is selected: [Off]	Turns knee correction on/off. **Hint** - Enabled only when [Base Look] – [Select] is set to [ITU709], [709tone], [HLG Live], or [HLG Natural].
[Auto Knee]	[On] / [Off] / ---	When [Target Display] – [SDR(BT.709)] is selected: [On] When [HDR(HLG)] is selected: [Off]	Turns auto knee on/off. **Hint** - Enabled only when [Setting] is set to [On] and [Base Look] – [Select] – [ITU709] or [709tone] is selected.
[Point]	75% to 109%	90%	Sets the knee point.
[Slope]	−99 to +99	±0	Sets the knee slope.

[Paint/Look] – [Detail]

Sets detail adjustment settings.

Note

- Enabled in custom shooting mode only.

Menu item	Sub-item setting	Factory default value	Description
[Setting]	[On] / [Off]	[On]	Turns detail on/off.
[Level]	−7 to +7	±0	Sets the detail level.
[Manual Setting]	[On] / [Off] / ---	[Off]	Turns detail manual adjustment on/off.

Menu item	Sub-item setting	Factory default value	Description
[H/V Ratio]	−2 to +2	±0	Sets the balance between vertical (V) and horizontal (H) detail for detail manual adjustment.
[B/W Balance]	[Type1] / [Type2] / [Type3] / [Type4] / [Type5]	[Type3]	Sets the balance between detail for low-luminance areas (Black) and detail for high-luminance areas (White) for detail manual adjustment.
[Limit]	0 to 7	0	Sets the limit level of the detail for detail manual adjustment.
[Crispening]	0 to 7	0	Sets the crispening level for detail manual adjustment.
[High Light Detail]	0 to 4	0	Sets the detail level of high-luminance areas for detail manual adjustment.

[Paint/Look] – [Matrix]

Sets matrix correction settings.

Note

- Enabled in custom shooting mode only.

Menu item	Sub-item setting	Factory default value	Description
[User Matrix]	[On] / [Off]	[Off]	Turns user matrix correction on/off.
[User Matrix Level]	−99 to +99	±0	Adjusts the color intensity of the entire image.
[User Matrix Phase]	−99 to +99	±0	Adjusts the color tone of the entire image.
[User Matrix R-G]	−99 to +99	±0	Sets a user-defined R-G user matrix.
[User Matrix R-B]	−99 to +99	±0	Sets a user-defined R-B user matrix.
[User Matrix G-R]	−99 to +99	±0	Sets a user-defined G-R user matrix.
[User Matrix G-B]	−99 to +99	±0	Sets a user-defined G-B user matrix.
[User Matrix B-R]	−99 to +99	±0	Sets a user-defined B-R user matrix.
[User Matrix B-G]	−99 to +99	±0	Sets a user-defined B-G user matrix.

[Paint/Look] – [Multi Matrix]

Sets multi matrix correction settings.

Note

- Enabled in custom shooting mode only.
- [Area Indication] is applied to all video outputs. Be aware of this fact when using a video output signal as the main signal.
- Multi matrix correction adjusts the hue and saturation for each color axis, with the total hue subdivided into 16. When selecting the color axis you want to adjust, you can check where the color axis you want to adjust is located in the captured image by turning on [Area Indication]. After confirming the location, turn off [Area Indication] and then adjust the hue and saturation.
- During recording operation, [Area Indication] is turned off (fixed).
- When you switch from the multi matrix correction settings screen to another screen, [Area Indication] is automatically turned off.
- While setting multi matrix correction, an assignable button assigned with [Display] acts as an [Area Indication] toggle button. [Area Indication] is switched on/off each time you press an assignable button assigned with [Display].

Menu item	Sub-item setting	Factory default value	Description
[Setting]	[On] / [Off]	[Off]	Turns multi matrix correction on/off.
[Area Indication]	[On] / [Off]	[Off]	Turns on/off the display function that identifies the target area corresponding to the target color axis for adjustment selected in [Axis]. The parts of the captured image outside the target area are displayed in monotone. **Hint** • You can turn [Area Indication] on/off on the multi matrix correction settings screen using an assignable button assigned with [Display]. **Note** • [Area Indication] is applied to all video outputs. Be aware of this fact when using a video output signal as the main signal.
[Reset]	[Execute] / [Cancel]	–	Resets the hue and saturation settings of each color axis to the default values. [Execute]: Execute function.
[Axis]	B / B+ / MG− / MG / MG+ / R / R+ / YL− / YL / YL+ / G− / G / G+ / CY / CY+ / B−	B	Selects the target color axis for adjustment.
[Hue]	−99 to +99	±0	Sets the hue of the target color axis for adjustment selected in [Axis].
[Saturation]	−99 to +99	±0	Sets the saturation of the target color axis for adjustment selected in [Axis].

TP1002215351

5-076-802-11(2) Copyright 2026 Sony Corporation

[TC/Media] Menu

The following tables describe the function and settings of each menu item.

[TC/Media] – [Timecode]

Sets timecode settings.

Menu item	Sub-item setting	Factory default value	Description
[Mode]	[Preset] / [Regen] / [Clock]	[Preset]	Sets the timecode running mode. [Preset]: Starts running from a preset value. [Regen]: Starts running from the timecode of the end of the previous clip. [Clock]: Uses the internal clock as the timecode.
[Run]	[Rec Run] / [Free Run]	[Rec Run]	[Rec Run]: Runs only when recording. [Free Run]: Always running, regardless of recording operation.
[Manual Setting]	–	–	Sets the timecode to an arbitrary value. [Set]: Apply setting.
[Reset]	[Execute] / [Cancel]	–	Resets the timecode to 00:00:00:00. [Execute]: Execute function.
[TC Format]	[DF] / [NDF]	[DF]	Sets the timecode format. [DF]: Drop Frame [NDF]: Non-Drop Frame
[USB Timecode]	[On(PORT2)] / [Off]	[Off]	Enables/disables the USB TC IN adaptor connection.

[TC/Media] – [TC Display]

Sets time data display settings.

Menu item	Sub-item setting	Factory default value	Description
[Time Data Display]	[Timecode] / [Users Bit] / [Duration]	[Timecode]	Switches the time data display.

[TC/Media] – [Users Bit]

Sets settings related to user bits.

Menu item	Sub-item setting	Factory default value	Description
[Mode]	[Fix] / [Time]	[Fix]	Sets the user bit mode. [Fix]: Uses an arbitrary fixed value in user bits. [Time]: Uses the current hour, minute, and second in user bits.
[Manual Setting]	–	–	Sets the user bits to an arbitrary value.

[TC/Media] – [HDMI TC Out]

Sets settings related to timecode output when using HDMI.

Menu item	Sub-item setting	Factory default value	Description
[Setting]	[On] / [Off]	[Off]	Sets whether to output the timecode to devices for other purposes using HDMI.

[TC/Media] – [Clip Name Format]

Sets settings related to clip naming.

Menu item	Sub-item setting	Factory default value	Description
[Auto Naming]	[Cam ID + Reel#] / [Title]	[Cam ID + Reel#]	Sets whether clip names use the values set in [Camera ID] and [Reel Number], or an arbitrary name set in [Title Prefix].
[Camera ID]	A to Z	A	Sets the camera ID used when generating clip names.
[Reel Number]	001 to 999	001	Sets the [Reel Number] numeric part used when generating clip names.
[Camera Position]	C / L / R	C	Sets the leading character of the shot number used when generating clip names.
[Clip Number]	[Series] / [Reset]	[Series]	Sets the numbering method of clip numbers. [Series]: A method of generating numbers starting from a series number counter stored in the unit. However, if the largest number among the clips on a memory card is greater than the series number counter, the numbering will start from that number. [Reset]: A method of numbering starting from the largest number among the clips on a memory card. **Note** • Configurable only when [Codec] is set to a codec other than X-OCN.
[Series Counter Reset]	[Execute] / [Cancel]	–	Resets the series number counter stored in the unit. [Execute]: Execute function. **Hint** • Each time a clip is recorded, the series number counter is updated with the number of that clip. **Note** • Configurable only when [Codec] is set to a codec other than X-OCN.

Menu item	Sub-item setting	Factory default value	Description
[Title Name Settings]	Enter an arbitrary character	C	Sets the title part of the clip name. **Note** • Enter 1 to 37 valid input characters. The following are valid input characters. Alphabetic characters (uppercase and lowercase), numeric characters, symbols (! # $ % ( ) + , - . ; = @ [ ] ^ _ ~) • Configurable only when [Codec] is set to a codec other than X-OCN.
[XAVC S Root Folder Name]	[M4ROOT] / [Cam ID + Reel#]	[M4ROOT]	Sets the volume label name and root folder name for the recording media (XAVC S files). **Hint** • If compatibility is required with models that do not have an XAVC S root folder naming function, leave this setting at the factory default value.

[TC/Media] – [Update Media]

Updates the management file on memory cards.

Menu item	Sub-item setting	Description
[Media(A)]	[Execute] / [Cancel]	Updates the management file on the memory card in card slot A. [Execute]: Execute function.
[Media(B)]	[Execute] / [Cancel]	Updates the management file on the memory card in card slot B. [Execute]: Execute function.

[TC/Media] – [Format Media]

Initializes memory cards.

Menu item	Sub-item setting	Description
[Media(A)]	[Full Format] / [Quick Format] / [Cancel]	Formats the memory card in card slot A.
[Media(B)]	[Full Format] / [Quick Format] / [Cancel]	Formats the memory card in card slot B.

TP1002215352

5-076-802-11(2) Copyright 2026 Sony Corporation

[Monitoring] Menu

The following tables describe the function and settings of each menu item.

[Monitoring] – [Output On/Off]

Sets video output settings.

Menu item	Sub-item setting	Factory default value	Description
[HDMI]	[On] / [Off]	[On]	Turns HDMI output on/off.

[Monitoring] – [Output Format]

Sets output format settings.

Menu item	Sub-item setting	Description
[HDMI]	For details about settings, see the following topic. HDMI Output Connector Output Formats	Sets the HDMI output resolution.

[Monitoring] – [Output Display]

Sets screen display output settings.

Menu item	Sub-item setting	Factory default value	Description
[HDMI]	[On] / [Off]	[Off]	Sets whether the menu, status, and other screen display are superimposed on the HDMI output signal.

[Monitoring] – [Display On/Off]

Selects the items to display on the shooting screen/playback screen.

Menu item	Sub-item setting	Factory default value	Description
[Camera ID]	[On] / [Off]	[On]	Selects the items to display on the shooting screen/playback screen.
[Frame Rate]	[On] / [Off]	[On]	
[Shutter]	[On] / [Off]	[On]	
[Iris]	[On] / [Off]	[On]	
[ISO/Gain/EI]	[On] / [Off]	[On]	
[Auto Exposure Mode]	[On] / [Off]	[On]	
[Auto Exposure Level]	[On] / [Off]	[On]	
[White Balance]	[On] / [Off]	[On]	
[Battery Remain]	[On] / [Off]	[On]	
[GPS]	[On] / [Off]	[On]	
[Imager Mode]	[On] / [Off]	[On]	
[Anamo. De-Squeeze]	[On] / [Off]	[On]	
[Base ISO/Sensitivity]	[On] / [Off]	[On]	
[Rec Format]	[On] / [Off]	[On]	
[Rec Look]	[On] / [Off]	[On]	
[Level Gauge]	[On] / [Off]	[On]	
[Zoom Position]	[Focal Length] / [Number] / [Bar] / [Off]	[Focal Length]	
[Focus Mode]	[On] / [Off]	[On]	
[Focus Position]	[On] / [Off]	[On]	
[Focus Area Indicator]	[On] / [Off]	[On]	
[Subject Recognition Frame]	[On] / [Off]	[On]	
[Tracking AF Pointer]	[On] / [Off]	[On]	
[Focus Indicator]	[On] / [Off]	[On]	
[Lens Info]	[On] / [Off]	[Off]	
[Video Level Warning]	[On] / [Off]	[On]	
[Gamma Display Assist]	[On] / [Off]	[On]	
[Video Signal Monitor]	[Off] / [Waveform] / [Vector] / [Histogram]	[Off]	
[TC Status]	[On] / [Off]	[On]	
[Output Look]	[On] / [Off]	[On]	
[HDMI Rec Control]	[On] / [Off]	[On]	
[Network Status]	[On] / [Off]	[On]	

Menu item	Sub-item setting	Factory default value	Description
[File Transfer Status]	[On] / [Off]	[On]	
[Stream Status]	[On] / [Off]	[On]	
[Image Stabilization]	[On] / [Off]	[On]	
[UWP RF Level]	[On] / [Off]	[On]	
[Audio Level Meter]	[On] / [Off]	[On]	
[Timecode]	[On] / [Off]	[On]	
[Look Name]	[On] / [Off]	[On]	
[Rec/Play Status]	[Always On] / [On] / [Off]	[On]	
[Rec Status Frame]	[On] / [Off]	[On]	
[Tally]	[On] / [Off]	[On]	
[Clip Name]	[On] / [Off]	[On]	
[Media Status]	[On] / [Off]	[On]	
[Clip Number]	[On] / [Off]	[On]	
[Notice Message]	[On] / [Off]	[On]	

[Monitoring] – [Frame Line]

Sets marker display settings.

Menu item	Sub-item setting	Factory default value	Description
[Setting]	[On] / [Off]	[On]	Turns the display of all markers on/off.
[Color]	[White] / [Yellow] / [Cyan] / [Green] / [Magenta] / [Red] / [Blue]	[White]	Selects the marker signal color.
[Center Marker]	1 / 2 / 3 / 4 / [Off]	[Off]	Selects the center marker.
[Safety Zone]	[On] / [Off]	[Off]	Turns the safety zone marker on/off.
[Safety Area]	80% / 90% / 92.5% / 95%	90%	Selects the size of the safety zone marker (as a percentage of total screen size).
[Aspect Marker]	[Line] / [Mask] / [Off]	[Off]	Selects the type of aspect marker.
[Aspect Mask]	0 to 15	12	Sets the level of the video signal outside the marker.
[Aspect Safety Zone]	[On] / [Off]	[Off]	Turns the aspect safety zone marker on/off.
[Aspect Safety Area]	80% / 90% / 92.5% / 95%	90%	Selects the size of the aspect safety zone marker (as a percentage of total screen size).
[Aspect Select]	1:1 / 4:3 / 13:9 / 14:9 / 15:9 / 17:9 / 1.66:1 / 1.85:1 / 2.35:1 / 2.39:1 / [Custom]	2.39:1	Sets the aspect ratio when displaying the aspect marker.

Menu item	Sub-item setting	Factory default value	Description
[Custom Aspect Ratio]	Enter an arbitrary value	01.00:01.00	Sets the aspect ratio to an arbitrary value. **Note** - This setting is enabled when [Aspect Select] is set to [Custom].
[Guide Frame]	[On] / [Off]	[Off]	Turns the guide frame display on/off.
[100% Marker]	[On] / [Off]	[Off]	Turns the 100% marker display on/off.
[User Box]	[On] / [Off]	[Off]	Turns the user box marker display on/off.
[User Box Width]	3 to 479	240	Sets the user box marker width (distance from the center to the left and right edges).
[User Box Height]	3 to 269	135	Sets the user box marker height (distance from the center to the top and bottom edges).
[User Box H Position]	−476 to +476	0	Sets the horizontal position of the center of the user box marker.
[User Box V Position]	−266 to +266	0	Sets the vertical position of the center of the user box marker.

[Monitoring] – [LCD Monitor Setting]

Sets LCD monitor settings.

Menu item	Sub-item setting	Factory default value	Description
[LCD Monitor Brightness]	1 to 15	8	Adjusts the brightness of the LCD monitor image.
[LCD Monitor Color Mode]	[Color] / [B&W]	[Color]	Selects the display mode of the LCD monitor in E-E display/recording mode.
[LCD Monitor H/V Flip]	[Auto] / [Horizontal Flip] / [H&V Flip] / [No Flip]	[Auto]	Selects flipping inversion of the LCD monitor image.

[Monitoring] – [VF Setting]

Sets viewfinder settings.

Menu item	Sub-item setting	Factory default value	Description
[LCD Monitor/VF Select]	[LCD Priority Auto] / [VF Priority Auto] / [LCD Monitor] / [VF]	[LCD Priority Auto]	Selects the LCD monitor or the viewfinder as the device to light.
[VF Brightness]	1 to 7	3	Adjusts the brightness of the viewfinder.
[VF Color Mode]	[Color] / [B&W]	[Color]	Selects the color mode of the viewfinder.
[VF Magnification]	[Standard] / [Zoom Out]	[Standard]	Selects the display magnification of the viewfinder.

Menu item	Sub-item setting	Factory default value	Description
[VF Image in HDR]	[HDR] / [SDR(LCD Like)]	[HDR]	Sets the format of the image to display in the viewfinder in HDR mode.

[Monitoring] – [Gamma Display Assist]

Sets gamma display assist settings.

Menu item	Sub-item setting	Factory default value	Description
[Setting]	[On] / [Off]	[On]	Turns the gamma display assist function on/off when [Custom] – [Target Display] – [HDR(HLG)] is selected. **Note** • This is set to [Off] (fixed) when [Custom] – [Target Display] is set to [SDR(BT.709)] and in log shooting mode.

[Monitoring] – [Focus Map]

Sets focus mapping.

Menu item	Sub-item setting	Factory default value	Description
[Setting]	[On] / [Off]	[Off]	Turns the focus mapping function on/off.

[Monitoring] – [Peaking]

Sets peaking settings.

Menu item	Sub-item setting	Factory default value	Description
[Setting]	[On] / [Off]	[Off]	Turns peaking on/off.
[Peaking Level]	[High] / [Mid] / [Low]	[Mid]	Sets the color peaking signal level.
[Color]	[B&W] / [Red] / [Yellow] / [Blue]	[B&W]	Selects the color of the color peaking signal.

[Monitoring] – [Zebra]

Sets zebra pattern settings.

Menu item	Sub-item setting	Factory default value	Description
[Setting]	[Off] / [Zebra1] / [Zebra2]	[Off]	Selects the zebra display type.
[Zebra1 Level]	0% to 109%	70%	Sets the [Zebra1] display level.
[Zebra1 Aperture Level]	1% to 20%	10%	Sets the [Zebra1] aperture level.
[Zebra2 Level]	0% to 109%	100%	Sets the [Zebra2] display level.

[Monitoring] – [Focus Magnifier]

Sets the focus magnifier.

Menu item	Sub-item setting	Factory default value	Description
[Focus Mag Button Target]	[LCD Monitor/VF] / [HDMI]	[LCD Monitor/VF]	Sets the focus magnification target to operate using an assignable button.

TP1002215353

5-076-802-11(2) Copyright 2026 Sony Corporation

[Audio] Menu

The following tables describe the function and settings of each menu item.
For details about settings, see the following topic.
Block Diagrams

[Audio] – [Audio Rec Format]

Sets audio recording format settings.

Menu item	Sub-item setting	Factory default value	Description
[Audio Rec Format]	[48kHz/24bit] / [48kHz/32bit float] / [96kHz/24bit] / [96kHz/32bit float]	[48kHz/24bit]	Sets the audio recording format. **Note** ● When set to [48kHz/32bit float] / [96kHz/24bit] / [96kHz/32bit float], connect a supported Multi Interface Shoe compatible accessory and select [Audio] – [Audio Input] – [CH1 Input Select] to [CH4 Input Select] – [Shoe CH1] to [Shoe CH4] in the full menu.

[Audio] – [32bit float WAV Rec]

Sets 32-bit float audio data settings.

Menu item	Sub-item setting	Factory default value	Description
[Setting]	[On] / [Off]	[Off]	Turns the 32-bit float audio data recording function on/off. **Note** ● When set to [On], connect a supported Multi Interface Shoe compatible accessory and select [Audio] – [Audio Input] – [CH1 Input Select] to [CH4 Input Select] – [Shoe CH1] to [Shoe CH4] in the full menu.

[Audio] – [Audio Input]

Sets audio input settings.

Menu item	Sub-item setting	Factory default value	Description
[CH1 Input Select]	[External MIC (L)] / [Internal MIC] / [Shoe CH1]	[Internal MIC]	Switches the input source for CH1.
[CH2 Input Select]	[External MIC (R)] / [Internal MIC] / [Shoe CH2]	[Internal MIC]	Switches the input source for CH2.

Menu item		Sub-item setting	Factory default value	Description
[CH3 Input Select]		[External MIC (L)] / [Internal MIC] / [Shoe CH1] / [Shoe CH3] / [Off]	[Internal MIC]	Switches the input source for CH3.
[CH4 Input Select]		[External MIC (R)] / [Internal MIC] / [Shoe CH2] / [Shoe CH4] / [Off]	[Internal MIC]	Switches the input source for CH4.
[Reference Level]		−20dB / −18dB / −16dB / −12dB	−20dB	Selects the recording level of the 1 kHz reference tone signal.
[CH1 Filter]	[Wind Filter]	[On] / [Off]	[Off]	Enables/disables the wind reduction filter for recording CH1.
	[Noise Cut Filter]	[On] / [Off]	[Off]	Enables/disables noise reduction for recording CH1.
	[Zoom Noise Cut(INT MIC)]	[On] / [Off]	[Off]	Enables/disables motor noise reduction for the internal microphone during power zoom for recording CH1. **Note** • Enabled only when [CH1 Input Select] is set to [Internal MIC].
[CH2 Filter]	[Wind Filter]	[On] / [Off]	[Off]	Enables/disables the wind reduction filter for recording CH2.
	[Noise Cut Filter]	[On] / [Off]	[Off]	Enables/disables noise reduction for recording CH2.
	[Zoom Noise Cut(INT MIC)]	[On] / [Off]	[Off]	Enables/disables motor noise reduction for the internal microphone during power zoom for recording CH2. **Note** • Enabled only when [CH2 Input Select] is set to [Internal MIC].
[CH3 Filter]	[Wind Filter]	[On] / [Off]	[Off]	Enables/disables the wind reduction filter for recording CH3.
	[Noise Cut Filter]	[On] / [Off]	[Off]	Enables/disables noise reduction for recording CH3.
	[Zoom Noise Cut(INT MIC)]	[On] / [Off]	[Off]	Enables/disables motor noise reduction for the internal microphone during power zoom for recording CH3. **Note** • Enabled only when [CH3 Input Select] is set to [Internal MIC].

Menu item		Sub-item setting	Factory default value	Description
[CH4 Filter]	[Wind Filter]	[On] / [Off]	[Off]	Enables/disables the wind reduction filter for recording CH4.
	[Noise Cut Filter]	[On] / [Off]	[Off]	Enables/disables noise reduction for recording CH4.
	[Zoom Noise Cut(INT MIC)]	[On] / [Off]	[Off]	Enables/disables motor noise reduction for the internal microphone during power zoom for recording CH4. **Note** ● Enabled only when [CH4 Input Select] is set to [Internal MIC].
[CH1 Level Control]		[Auto] / [Manual]	[Auto]	Selects automatic audio input level adjustment or manual adjustment for CH1. **Note** ● If both [CH1 Input Select] / [CH2 Input Select] are set to [Internal MIC], CH2 is switched to automatic/manual in conjunction with this setting.
[CH2 Level Control]		[Auto] / [Manual]	[Auto]	Selects automatic audio input level adjustment or manual adjustment for CH2. **Note** ● If both [CH1 Input Select] / [CH2 Input Select] are set to [Internal MIC], CH2 is switched to automatic/manual in conjunction with the [CH1 Level Control] setting.
[CH3 Level Control]		[Auto] / [Manual]	[Auto]	Selects automatic audio input level adjustment or manual adjustment for CH3. **Note** ● If both [CH3 Input Select] / [CH4 Input Select] are set to [Internal MIC], CH4 is switched to automatic/manual in conjunction with this setting.
[CH4 Level Control]		[Auto] / [Manual]	[Auto]	Selects automatic audio input level adjustment or manual adjustment for CH4. **Note** ● If both [CH3 Input Select] / [CH4 Input Select] are set to [Internal MIC], CH4 is switched to automatic/manual in conjunction with the [CH3 Level Control] setting.
[CH1 Input Level]		0 to 99	49	Sets the input level for CH1.

Menu item	Sub-item setting	Factory default value	Description
[CH2 Input Level]	0 to 99	49	Sets the input level for CH2.
[CH3 Input Level]	0 to 99	49	Sets the input level for CH3.
[CH4 Input Level]	0 to 99	49	Sets the input level for CH4.
[Audio Input Level]	0 to 99	99	Sets the audio input level. Can be used as the master volume, according to the settings of [CH1 Level] to [CH4 Level].
[Limiter Mode]	[Off] / −6dB / −9dB / −12dB / −15dB / −17dB	[Off]	Selects the limiter characteristic for large input signals when adjusting the audio input level manually.
[CH1&2 AGC Mode]	[Mono] / [Stereo]	[Stereo]	Sets the auto level adjustment mode for CH1 and CH2. When [Stereo] is selected, auto gain control is linked between channels.
[CH3&4 AGC Mode]	[Mono] / [Stereo]	[Stereo]	Sets the auto level adjustment mode for CH3 and CH4. When [Stereo] is selected, auto gain control is linked between channels.
[AGC Spec]	−6dB / −9dB / −12dB / −15dB / −17dB	−6dB	Selects the auto gain control characteristic.
[1kHz Tone on Color Bars]	[On] / [Off]	[Off]	Turns the 1 kHz reference tone signal on/off when displaying color bars. **Note** • When set to [On], the 1 kHz reference tone signal is output on CH3/CH4, even if [CH3 Input Select] / [CH4 Input Select] are set to [Off].
[CH1 Level]	Input without XLR adaptor: [Audio Input Level] / [CH1 Input Level] / [Level+CH1 Input Level] Input with XLR adaptor: [Audio Input Level] / [Through]	Input without XLR adaptor: [Level+CH1 Input Level] Input with XLR adaptor: [Audio Input Level]	Sets the combination of audio input level adjustments enabled for CH1.
[CH2 Level]	Input without XLR adaptor: [Audio Input Level] / [CH2 Input Level] / [Level+CH2 Input Level] Input with XLR adaptor: [Audio Input Level] / [Through]	Input without XLR adaptor: [Level+CH2 Input Level] Input with XLR adaptor: [Audio Input Level]	Sets the combination of audio input level adjustments enabled for CH2.
[CH3 Level]	Input without XLR adaptor: [Audio Input Level] / [CH3 Input Level] / [Level+CH3 Input Level] Input with XLR adaptor: [Audio Input Level] / [Through]	Input without XLR adaptor: [Level+CH3 Input Level] Input with XLR adaptor: [Audio Input Level]	Sets the combination of audio input level adjustments enabled for CH3.

Menu item	Sub-item setting	Factory default value	Description
[CH4 Level]	Input without XLR adaptor: [Audio Input Level] / [CH4 Input Level] / [Level+CH4 Input Level] Input with XLR adaptor: [Audio Input Level] / [Through]	Input without XLR adaptor: [Level+CH4 Input Level] Input with XLR adaptor: [Audio Input Level]	Sets the combination of audio input level adjustments enabled for CH4.

[Audio] – [Audio Output]

Sets audio output settings.

Menu item	Sub-item setting	Factory default value	Description
[Monitor CH]	[CH1/CH2] / [CH3/CH4] / [MIX ALL] / [CH1] / [CH2] / [CH3] / [CH4]	[CH1/CH2]	Selects the audio channel output to the headphone connector and built-in speaker. **Note** • If audio for multiple channels is set for simultaneous output, the output level for each channel is reduced for output to prevent clipping.
[Volume]	0 to 50	0	Adjusts the monitoring audio level of the headphones connector and built-in speaker.
[Headphone Live/Processed]	[Live] / [Processed]	[Live]	Selects whether to output audio to headphones with the fastest possible timing or to output processed audio, such as added noise reduction.
[Headphone Mono/ST]	[Mono] / [Stereo]	[Stereo]	Selects whether the headphone connector output is monaural or stereo.
[Alarm Level]	0 to 7	4	Adjusts the volume of the alarm.
[HDMI Out CH]	[CH1/CH2] / [CH3/CH4]	[CH1/CH2]	Sets the combination of audio channels on the HDMI output.

TP1002215354

5-076-802-11(2) Copyright 2026 Sony Corporation

[Clip Operations] Menu

The following tables describe the function and settings of each menu item.

[Display Clip Properties]

Menu item	Description
[Display Clip Properties]	Displays the clip properties screen.

[Clip Operations] – [Set Clip Flag]

Edits a clip flag.

Menu item	Description
[Add OK]	Adds an [OK] flag.
[Add NG]	Adds an [NG] flag.
[Add KEEP]	Adds a [KEEP] flag.
[Delete Clip Flag]	Deletes all clip flags.

[Clip Operations] – [Lock/Unlock Clip]

Sets clip protection.

Menu item	Description
[Select Clip]	Locks/unlocks a selected clip.
[Lock All Clips]	Locks all clips.
[Unlock All Clips]	Unlocks all clips.

[Clip Operations] – [Delete Clip]

Deletes clips.

Menu item	Description
[Select Clip]	Deletes a selected clip.
[All Clips]	Deletes all clips.

[Clip Operations] – [Transfer Clip]

Transfers clips.

Note

- [Transfer Clip] cannot be configured when a password is not configured using [Network] – [Network Setup] – [Edit Authentication] – [Input Password].

Menu item	Description
[Select Clip]	Transfers a selected clip.
[All Clips]	Transfers all clips. **Note** - Up to 200 clips can be transferred.

[Clip Operations] – [Transfer Clip (Proxy)]

Transfers proxy clips.

Note

- [Transfer Clip (Proxy)] cannot be configured when a password is not configured using [Network] – [Network Setup] – [Edit Authentication] – [Input Password].

Menu item	Description
[Select Clip]	Transfers a proxy clip corresponding to the selected clip.
[All Clips]	Transfers proxy clips corresponding to all clips. **Note** - Up to 200 clips can be transferred.

[Clip Operations] – [Filter Clips]

Sets the clips to display.

Menu item	Description
[OK]	Displays only clips that have an [OK] flag.
[NG]	Displays only clips that have an [NG] flag.
[KEEP]	Displays only clips that have a [KEEP] flag.
[None]	Displays only clips that have no flag.
[All]	Display all clips, regardless of whether they have any flags.

[Clip Operations] – [Customize View]

Switches the clip list screen display.

Menu item	Sub-item setting	Factory default value	Description
[Clips Caption]	[Clip Name] / [Date Time] / [Time Code] / [Duration] / [Sequential Number]	[Clip Name]	Switches the information displayed below thumbnail images.

5-076-802-11(2) Copyright 2026 Sony Corporation

[Technical] Menu

The following tables describe the function and settings of each menu item.

[Technical] – [Exposure Assist]

Sets false color and exposure assist display settings.

Menu item	Sub-item setting	Factory default value	Description
[False Color]	[On] / [Off]	[Off]	Enables/disables the false color function.
[Output Target]	[HDMI] / [LCD Monitor/VF]	All options have check mark	Sets the destination for exposure assist display. Configure setting using the checkbox.
[Color Scale]	[Enable] / [Disable]	[Enable]	Sets the color scale display for exposure assist display.

[Technical] – [Test Signals]

Sets color bar settings.

Menu item	Sub-item setting	Factory default value	Description
[Color Bars]	[On] / [Off]	[Off]	Turns color bars on/off.
[Color Bar Type]	[ARIB] / [100%] / [75%] / [SMPTE]	[ARIB]	Selects the color bar type.

[Technical] – [Alerts & Tally]

Sets recording/tally lamp settings.

Menu item	Sub-item setting	Factory default value	Description
[Front Tally Lamp]	[On] / [Off]	[On]	Turns the recording/tally lamp (front) on/off.
[Rear Tally Lamp]	[On] / [Off]	[On]	Turns the recording/tally lamp (rear) and record START/STOP button lamp on/off.
[Tally Control]	[External] / [Internal]	[Internal]	Specifies the target to receive tally call control information.
[Rec Start/Stop Beep]	0 to 50	0	Adjusts the volume of the beep sound emitted when recording starts/stops.

[Technical] – [Key Lock]

Sets key lock settings.

Menu item	Sub-item setting	Factory default value	Description
[Setting]	[Enable] / [Disable]	[Disable]	Enables/disables key lock operation. **Hint** ● When enabled, you can activate/release the key lock by pressing and holding the USER button and pressing the MENU button for 1 second or longer.
[with Rec Button]	[On] / [Off]	[On]	Sets whether the record START/STOP button on the top side of the camera is included in the key lock target. **Hint** ● An assignable button assigned with [Rec] is not included in the key lock target when this is set to [On].

[Technical] – [Touch Operation]

Sets settings related to touch operation.

Menu item	Sub-item setting	Factory default value	Description
[Setting]	[On] / [Off]	[On]	Turns touch operation on/off.

[Technical] – [Rec Review]

Sets recording review settings.

Menu item	Sub-item setting	Factory default value	Description
[Setting]	[3s] / [10s] / [Clip]	[Clip]	Selects the time for playback of clips just recorded for recording review.

[Technical] – [Zoom]

Sets the zoom settings.

Menu item	Sub-item setting	Factory default value	Description
[Zoom Type]	[Optical Zoom Only] / [On(Clear Image Zoom)]	[Optical Zoom Only]	Sets the type of zoom. [Optical Zoom Only]: Optical zoom is adjusted by operation of the lens. [On(Clear Image Zoom)]: Electronic zoom with little or no deterioration in image quality.
[Clear Image Zoom Type]	[Optical Zoom Priority] / [Smooth Priority]	[Smooth Priority]	Sets the zoom operation used for [Clear Image Zoom].

[Technical] – [Zoom Lever Speed]

Sets zoom lever settings.

Menu item	Sub-item setting	Factory default value	Description
[1st Zoom (Standby)]	[1(Slow)] / 2 / 3 / 4 / 5 / 6 / 7 / [8(Fast)]	3	Sets the zoom speed (1st level) of the zoom lever during recording standby.
[2nd Zoom(Standby)]	[1(Slow)] / 2 / 3 / 4 / 5 / 6 / 7 / [8(Fast)]	[8(Fast)]	Sets the zoom speed (2nd level) of the zoom lever during recording standby.
[1st Zoom (Rec)]	[1(Slow)] / 2 / 3 / 4 / 5 / 6 / 7 / [8(Fast)]	3	Sets the zoom speed (1st level) of the zoom lever during recording.
[2nd Zoom(Rec)]	[1(Slow)] / 2 / 3 / 4 / 5 / 6 / 7 / [8(Fast)]	[8(Fast)]	Sets the zoom speed (2nd level) of the zoom lever during recording.

[Technical] – [Bluetooth Zoom]

Sets zoom lever settings of the Bluetooth remote control.

Menu item	Sub-item setting	Factory default value	Description
[Zoom Speed Type]	[Variable] / [Fixed]	[Variable]	Sets the zoom speed type of the Bluetooth remote control.
[Fixed Speed (Standby)]	[1(Slow)] / 2 / 3 / 4 / 5 / 6 / 7 / [8(Fast)]	3	Sets the zoom speed during recording standby.
[Fixed Speed (Rec)]	[1(Slow)] / 2 / 3 / 4 / 5 / 6 / 7 / [8(Fast)]	3	Sets the zoom speed during recording.

[Technical] – [GPS]

Sets GPS settings.

Menu item	Sub-item setting	Factory default value	Description
[Location by Mobile App]	[On] / [Off]	[Off]	Sets whether or not to obtain location information from a mobile app.

[Technical] – [Menu Settings]

Sets settings related to the menu.

Menu item	Sub-item setting	Factory default value	Description
[Info. Disp. Mode Operation]	[Home Screen Priority] / [Direct Menu Priority]	[Home Screen Priority]	Sets whether Home screen operation or direct menu operation has priority in information display mode.

[Technical] – [USB]

Sets USB function settings.

Menu item	Sub-item setting	Factory default value	Description
[USB Cnct Mode (PORT1)]	[Off] / [USB Remote] / [USB Tethering]	[Off]	Selects the USB function that operates on port 1.
[USB Cnct Mode (PORT2)]	[Off] / [USB Timecode] / [USB Remote]	[Off]	Selects the USB function that operates on port 2.

[Technical] – [Fan Control]

Sets fan control mode settings.

Menu item	Sub-item setting	Factory default value	Description
[Setting]	[Auto] / [Minimum] / [Off in Rec]	[Auto]	Sets the control mode of the fan. **Note** - Even when set to [Off in Rec], the fan will operate if the internal temperature of the unit rises above a certain value.

[Technical] – [Lens]

Sets settings related to lenses.

Menu item	Sub-item setting	Factory default value	Description
[Zoom Ring Direction]	[Left(W)/Right(T)] / [Right(W)/Left(T)]	[Left(W)/Right(T)]	Sets the rotation direction of the zoom ring.
[Shading Compensation]	[Auto] / [Auto(Low)] / [Off]	[Auto]	Sets automatic shading compensation.
[Chroma Aberration Comp.]	[Auto] / [Off]	[Auto]	Sets automatic chromatic aberration compensation.
[Distortion Comp.]	[Auto] / [Off]	[Auto]	Sets automatic distortion compensation.
[Breathing Compensation]	[Auto] / [Off]	[Off]	Sets lens breathing compensation.
[Focus Distance Format]	[Meter] / [Feet]	[Meter]	Sets the display units for [Lens Info] / [Focus Position].

[Technical] – [Auto Pixel Restore]

Executes the automatic pixel restoration function.

Menu item	Sub-item setting	Factory default value	Description
[Auto Pixel Restoration]	[Execute] / [Cancel]	–	Executes the automatic pixel restoration (automatic pixel noise reduction) function. [Execute]: Execute function. **Note** ● Attach the cap and cover the surrounding area with a black cloth to ensure proper light shielding.

[Technical] – [Sensor Cleaning]

Executes the sensor cleaning function.

Menu item	Sub-item setting	Factory default value	Description
[Sensor Cleaning]	[Execute] / [Cancel]	–	Executes the sensor cleaning function. [Execute]: Execute function.

[Technical] – [Power Settings]

Sets settings related to the power supply.

Menu item	Sub-item setting	Factory default value	Description
[Power Save]	[Off] / [30min] / [5min] / [2min] / [1min]	[5min]	Sets the time for automatically turning the unit off.
[Auto Power Off Temp.]	[Standard] / [High]	[Standard]	Sets the temperature for turning the unit off.
[USB Power Supply]	[Auto] / [PORT1] / [PORT2] / [Off]	[Auto]	Sets the USB port from which to supply power.

TP1002215356

5-076-802-11(2) Copyright 2026 Sony Corporation

[Network] Menu

The following tables describe the function and settings of each menu item.

[Network] – [Network Setup]

Executes the network setup assist tool.

Menu item	Sub-item setting	Factory default value	Description
[Setup for Mobile App]	–	–	Starts the network setup assist tool.
[LAN Type Select]	[Wireless LAN AP 2.4G] / [Wireless LAN AP 5G] / [Wireless LAN ST] / [Wired LAN] / [Off]	[Off]	Sets the LAN connection method.
[Show Authentication]	–	–	Displays the user name and password for access authentication as text and QR code. **Note** ● The user name and password are automatically generated and set on the camera at the time of purchase. When setting your user name and password, make sure that the settings are not visible to others.
[Edit Authentication]	[User Name]	–	Sets the user name for access authentication. **Note** ● Enter up to 16 valid input characters. The following are valid input characters. Alphabetic characters (uppercase and lowercase), numeric characters, symbols (! % + , - . = -)
	[Input Password]	–	Sets the password for access authentication. **Note** ● The number of valid input characters is 8 to 16 alphanumeric/symbol characters, and must contain both letters and numbers. The following are valid input characters. Alphabetic characters (uppercase and lowercase), numeric characters, symbols (! % + , - . = -)
	[Generate Password] – [Execute] / [Cancel]	–	Automatically generates a password for access authentication. [Execute]: Execute function.

[Network] – [Wireless LAN]

Sets settings related to wireless LAN.

Menu item	Sub-item setting	Factory default value	Description
[Setting]	[Access Point (2.4GHz)] / [Access Point (5GHz)] / [Station Mode] / [Off]	[Off]	Selects the operation mode of the wireless LAN connection. **Note** • The unit does not support simultaneous use of wireless LAN and wired LAN.
[Channel]	–	–	Displays the wireless LAN channel. (Access point mode only)
[Camera SSID & Password]	–	–	Displays the SSID and password of the unit. (Access point mode only)
[Regenerate Password]	–	–	Regenerates the password for access point mode. (Access point mode only)
[Camera Remote Control]	[Enable] / [Disable]	[Disable]	Sets whether remote control from a mobile device connected to the unit by wireless LAN in station mode is enabled/disabled. (Station mode only)
[Connected Network]	–	–	Displays the connected wireless LAN network access point. (Station mode only)
[Scan Networks]	–	–	Detects the wireless LAN networks access points and displays a list. (Station mode only)
[WPS]	[Execute] / [Cancel]	–	Establishes a connection using WPS (Wi-Fi Protected Setup). [Execute]: Execute function. (Station mode only) **Note** • Connection using WPS cannot be established with devices without configured security settings.

Menu item	Sub-item setting	Factory default value	Description
[Manual Register]	–	–	Sets the wireless LAN network access point to connect. (Station mode only)
	[SSID]	–	Sets the SSID for the access point to connect. **Note** ● Enter 1 to 32 valid input characters. The following are valid input characters. Alphabetic characters (uppercase and lowercase), numeric characters, symbols (- . @ _ ( ) ! " # $ % & ' * + , / : ; < = > ? [\ ] ^ ` { | } ~)
	[Security]	–	Set the type of security for the access point to connect.
	[Password]	–	Sets the password for the access point to connect. **Hint** ● When security is set to [WPA2] or [WPA3]: *******. When security is set to [None]: (blank). **Note** ● The following shows the number of valid input characters. — When set to [WPA2]: 8 to 63 characters — When set to [WPA3]: 8 to 128 characters — When set to [None]: 0 characters The following are valid input characters. Alphabetic characters (uppercase and lowercase), numeric characters, symbols (- . @ _ ( ) ! " # $ % & ' * + , / : ; < = > ? [\ ] ^ ` { | } ~)
	[DHCP]	–	Turns DHCP on/off.
	[IP Address]	–	Sets the IP address of the unit when [DHCP] is set to [Off]. **Note** ● Use the ▲/▼ buttons to enter an address in the range 0.0.0.0 to 255.255.255.255 for each segment.
	[Subnet Mask]	–	Sets the subnet mask of the unit when [DHCP] is set to [Off]. **Note** ● Use the ▲/▼ buttons to enter an address in the range 0.0.0.0 to 255.255.255.255 for each segment.

Menu item	Sub-item setting	Factory default value	Description
	[Gateway]	–	Sets the default gateway of the unit when [DHCP] is set to [Off]. **Note** ● Use the ▲/▼ buttons to enter an address in the range 0.0.0.0 to 255.255.255.255 for each segment.
	[DNS Auto]	–	Enables/disables DNS auto acquisition when [DHCP] is set to [On].
	[Primary DNS Server]	–	Sets the primary DNS server of the unit when [DNS Auto] is set to [Off]. **Note** ● Use the ▲/▼ buttons to enter an address in the range 0.0.0.0 to 255.255.255.255 for each segment.
	[Secondary DNS Server]	–	Sets the secondary DNS server of the unit when [DNS Auto] is set to [Off]. **Note** ● Use the ▲/▼ buttons to enter an address in the range 0.0.0.0 to 255.255.255.255 for each segment.
[IP Address]	–	–	Displays the IP address of the unit.
[Subnet Mask]	–	–	Displays the subnet mask of the unit.
[MAC Address]	–	–	Displays the MAC address of the wireless LAN interface of the unit.

[Network] – [Wired LAN]

Sets settings related to wired LAN.

Menu item	Sub-item setting	Factory default value	Description
[Setting]	[On] / [Off]	[Off]	Turns wired LAN on/off. **Note** ● The unit does not support simultaneous use of wireless LAN and wired LAN.
[Camera Remote Control]	[Enable] / [Disable]	[Disable]	Sets whether to enable remote control from a device connected to the unit by wired LAN.

Menu item	Sub-item setting	Factory default value	Description
[Detail Settings]	–	–	Configures properties of the wired LAN.
	[DHCP]	–	Turns DHCP on/off.
	[IP Address]	–	Sets the IP address of the unit when [DHCP] is set to [Off]. **Note** ● Use the ▲/▼ buttons to enter an address in the range 0.0.0.0 to 255.255.255.255 for each segment.
	[Subnet Mask]	–	Sets the subnet mask of the unit when [DHCP] is set to [Off]. **Note** ● Use the ▲/▼ buttons to enter an address in the range 0.0.0.0 to 255.255.255.255 for each segment.
	[Gateway]	–	Sets the default gateway of the unit when [DHCP] is set to [Off]. **Note** ● Use the ▲/▼ buttons to enter an address in the range 0.0.0.0 to 255.255.255.255 for each segment.
	[DNS Auto]	–	Enables/disables DNS auto acquisition when [DHCP] is set to [On].
	[Primary DNS Server]	–	Sets the primary DNS server of the unit when [DNS Auto] is set to [Off]. **Note** ● Use the ▲/▼ buttons to enter an address in the range 0.0.0.0 to 255.255.255.255 for each segment.
	[Secondary DNS Server]	–	Sets the secondary DNS server of the unit when [DNS Auto] is set to [Off]. **Note** ● Use the ▲/▼ buttons to enter an address in the range 0.0.0.0 to 255.255.255.255 for each segment.
[IP Address]	–	–	Displays the IP address of the unit.
[Subnet Mask]	–	–	Displays the subnet mask of the unit.
[MAC Address]	–	–	Displays the MAC address of the unit.

[Network] – [USB Tethering]

Sets settings related to USB tethering.

Menu item	Sub-item setting	Factory default value	Description
[Setting]	[On(PORT1)] / [Off]	[Off]	Enables/disables the USB tethering function of the unit.
[Camera Remote Control]	[Enable] / [Disable]	[Disable]	Enables/disables remote control via USB tethering from “Monitor & Control,” “Creators' App for Enterprise,” or other mobile device application.
[IP Address]	–	–	Displays the IP address of the unit.
[Subnet Mask]	–	–	Displays the subnet mask of the unit.

[Network] – [Bluetooth]

Sets settings related to Bluetooth.

Menu item	Sub-item setting	Factory default value	Description
[Setting]	[On] / [Off]	[Off]	Turns the Bluetooth function on/off.
[Pairing]	[Execute] / [Cancel]	–	Pairs the unit with a Bluetooth device. [Execute]: Execute function.
[Manage Paired Device]	–	–	Displays/deletes paired Bluetooth device.
[Device Address]	–	–	Displays the Bluetooth address of the unit.

[Network] – [File Transfer]

Sets settings related to file transfers.

Menu item	Sub-item setting	Factory default value	Description
[Auto Upload]	[On] / [Off]	[Off]	Turns auto transfer of original clips on/off. **Note** • When [Project] – [Simul Rec] – [Setting] is set to [On], clips recorded on the memory card in card slot B are not automatically uploaded.
[Auto Upload (Proxy)]	[On] / [Off]	[Off]	[On]: Enables auto transfer of proxy clips. [Off]: Disables auto transfer of proxy clips. **Note** • When [Project] – [Simul Rec] – [Setting] is set to [On], clips recorded on the memory card in card slot B are not automatically uploaded.
[Default Upload Server]	–	–	Selects the file transfer destination server. The server selected here becomes the auto transfer destination for original clips and proxy clips, and the transfer destination for clips from the clip list screen. Displays the [Display Name] setting configured in [Server Settings1] to [Server Settings3].
[Clear Completed Jobs]	[Execute] / [Cancel]	–	Clears completed transfer jobs from the job list. [Execute]: Execute function.

Menu item	Sub-item setting	Factory default value	Description
[Clear All Jobs]	[Execute] / [Cancel]	–	Clears all transfer jobs from the job list. [Execute]: Execute function.
[View Job List]	–	–	Displays the transfer job list.
[Server Settings1]	[Display Name]	–	Sets the display name shown in the transfer destination settings.
	[Service] – [FTP]	[FTP]	Displays the type of server.
	[Host Name]	–	Sets the host name of the transfer destination server.
	[Port] (1 to 65535)	21	Sets the port number of the transfer destination server.
	[User Name]	–	Sets the user name for authentication of the transfer destination server connection.
	[Password]	–	Sets the authentication password of the transfer destination server connection.
	[Passive Mode] – [On] / [Off (Active Mode)]	[Off (Active Mode)]	Turns passive mode on/off.
	[Destination Directory]	–	Sets the name of the transfer destination directory.
	[Using Secure Protocol] – [On] / [Off]	[Off]	Sets whether to use secure FTP transfer (FTPES) ([On]) or ([Off]).
	[Root Certificate] – [Load] / [Clear] / [None]	[None]	Loads/clears a root certificate for secure FTP transfer. **Note** • Write the certificate to the root directory of a memory card. Set the file name as follows. certification.pem (PEM format) The maximum certificate size that can be loaded is 1 MB per certificate.
	[Root Certificate Status] – [Loaded] / [No Certificate]	[No Certificate]	Displays the root certificate load status for secure FTP transfer.
	[Reset] – [Execute] / [Cancel]	–	Resets the [Server Settings1] settings to the default values. [Execute]: Execute function.
[Server Settings2]	Same as [Server Settings1]	–	–
[Server Settings3]	Same as [Server Settings1]	–	–

[Network] – [Stream]

Sets settings related to streaming.

Menu item	Sub-item setting	Factory default value	Description
[Setting]	[On] / [Off]	[Off]	Turns streaming on/off.

Menu item	Sub-item setting	Factory default value	Description
[Destination Select]	–	[RTMP/RTMPS 1]	Selects the streaming connection destination. Displays the [Display Name] setting configured in [RTMP/RTMPS 1] to [RTMP/RTMPS 3] and [SRT-Caller 1] to [SRT-Caller 3].
[RTMP/RTMPS 1]	–	–	Sets a RTMP/RTMPS streaming connection.
	[Display Name]	–	Sets the display name shown in [Destination Select].
	[Codec]	[H.264/AVC]	Displays the codec of the streaming video.
	[Resolution] -3840×2160P / 1920×1080P / 1280×720P	1920×1080P	Sets the resolution of the streaming video.
	[Bit Rate]	[6Mbps]	Sets the bit rate of the streaming video.
	[Destination URL]	–	Sets the URL of the server to connect.
	[Stream Key]	–	Sets the stream key used for streaming.
	[RTMPS Certificate] – [Load] / [Clear] / [None]	[None]	Loads/clears a default certificate. **Note** - Write the certificate to the root directory of a memory card. Set the file name as follows. RTMPS_certification.pem (PEM format) The maximum certificate size that can be loaded is 1 MB per certificate.
	[RTMPS Certificate Status] – [Loaded] / [Default]	[Default]	Displays the certificate load status for RTMPS connection.
	[Reset] – [Execute] / [Cancel]	–	Returns the settings to the default values. [Execute]: Execute function.
[RTMP/RTMPS 2]	Same as [RTMP/RTMPS 1]	–	–
[RTMP/RTMPS 3]	Same as [RTMP/RTMPS 1]	–	–
[RTMPS Default Certificates]	[Replace] – [Execute] / [Cancel]	–	Loads default certificates from a memory card inserted in card slot B. [Execute]: Execute function.
	[Reset] – [Execute] / [Cancel]	–	Initializes the settings of the default certificate group. [Execute]: Execute function.
	[Status]	[Preinstall]	Displays the status of the default certificate group.

Menu item	Sub-item setting	Factory default value	Description
[SRT-Caller 1]	–	–	Sets an SRT streaming connection.
	[Display Name]	–	Sets the display name shown in [Destination Select].
	[Codec] [H.264/AVC] / [H.265/HEVC]	[H.264/AVC]	Displays the codec of the streaming video.
	[Resolution] 3840×2160P / 1920×1080P / 1280×720P	1920×1080P	Sets the resolution of the streaming video.
	[Bit Rate]	[6Mbps]	Sets the bit rate for streaming.
	[Destination URL]	–	Sets the URL of the server to connect.
	[Port] (1 to 65535)	7001	Sets the port of the streaming transmit destination.
	[Latency] (20ms to 8000ms)	[120 ms]	Sets the streaming distribution latency.
	[TTL] (1 to 255)	[64 times]	Sets the time-to-live (TTL) value for streaming.
	[Encryption] – [None] / [AES-128] / [AES-256]	[None]	Sets the encryption method for streaming.
	[Passphrase]	–	Sets the passphrase used for encryption for streaming.
	[ARC] – [On] / [Off]	[On]	Enables/disables ARC when streaming.
	[Reset] – [Execute] / [Cancel]	–	Returns the settings to the default values. [Execute]: Execute function.
[SRT-Caller 2]	Same as [SRT-Caller 1]	–	–
[SRT-Caller 3]	Same as [SRT-Caller 1]	–	–

[Network] – [Network Reset]

Resets the network settings.

Menu item	Sub-item setting	Description
[Reset]	[Execute] / [Cancel]	Resets the network settings. [Execute]: Execute function.

TP1002215357

5-076-802-11(2) Copyright 2026 Sony Corporation

[Maintenance] Menu

The following tables describe the function and settings of each menu item.

[Maintenance] – [Language]

Sets the display language.

Menu item	Description
[Select]	Sets the display language. [Set]: Apply setting.

[Maintenance] – [Accessibility]

Sets settings related to the screen reader function and screen magnifier function.

Menu item	Sub-item setting	Factory default value	Description
[Screen Reader]	–	–	Sets screen reader settings.
	[Setting] – [On] / [Off]	[Off]	Turns the screen reader on/off.
	[Speed] – [Fast 4] / [Fast 3] / [Fast 2] / [Fast 1] / [Standard] / [Slow 1] / [Slow 2]	[Standard]	Sets the screen reader speed.
	[Volume] – 1 to 15	7	Sets the screen reader volume.
	[Read Out when Power On] – [Enable] / [Disable]	[Enable]	Sets whether the screen reader is turned on if you press and hold the MENU button and turn the unit on.
[Enlarge Screen]	–	–	Sets screen magnifier settings.
	[Setting] – [Enable] / [Disable]	[Disable]	Turns the screen magnifier on/off.
	[Magnification] – x1.5 / x2.0 / x2.5 / x3.0	All options have check mark	Sets the screen magnifier magnification factor. Configure setting using the checkbox.
	[Enlarge Screen Button] – [Assignable Button <1>] to [Assignable Button <6>] / [<VF/LCD>] / [Focus Hold Button]	[Assignable Button <4>]	Sets the button for the screen magnifier.

[Maintenance] – [Clock Set]

Sets internal clock settings.

Menu item	Sub-item setting	Factory default value	Description
[Time Zone]	[UTC -12:00] to [UTC +14:00]	The default value varies depending on the country or region of purchase.	Sets the time difference from UTC in 30-minute units.

Menu item	Sub-item setting	Factory default value	Description
[Date Mode]	[YYMMDD] / [MMDDYY] / [DDMMYY]	[DDMMYY] / [MMDDYY] The default value varies depending on the country or region of purchase.	Selects the display format for dates. [YYMMDD]: Year, month, day [MMDDYY]: Month, day, year [DDMMYY]: Day, month, year
[12h/24h]	[12h] / [24h]	[24h]	Selects the clock display format. [12h]: 12-hour mode [24h]: 24-hour mode
[Date]	–	–	Sets the current date. [Set]: Apply setting.
[Time]	–	–	Sets the current time. [Set]: Apply setting.
[Auto Date/Time Correction]	[On] / [Off]	[On]	Turns auto time correction on/off.
[Auto Time Zone Correction]	[On] / [Off]	[On]	Turns auto time zone correction on/off.

[Maintenance] – [All Reset]

Resets settings to factory default values.

Menu item	Sub-item setting	Description
[Reset]	[Execute] / [Cancel]	Resets settings to factory default values. [Execute]: Execute function. **Note** • 3D LUT files imported using [Paint/Look] – [Base Look] – [Import from Media(B)] are not deleted. To delete all imported 3D LUT files, execute [Paint/Look] – [Base Look] – [Delete All].
[Reset without Network]	[Execute] / [Cancel]	Resets the menu settings, excluding [Network] menu settings, to the factory default state.
[Reset to Factory Defaults]	[Execute] / [Cancel]	Deletes all settings, scene files, user base look values, flange focal distance adjustment value for the lens, root certificates (RTMPS, FTP), access point information, access authentication information, FTP server settings, and network streaming connection information, and resets them to the factory default state.

[Maintenance] – [Hours Meter]

Displays the accumulated running time.

Menu item	Sub-item setting	Factory default value	Description
[Hours(System)]	–	–	Displays the accumulated hours of use (cannot be reset).
[Hours(Resettable)]	–	–	Displays the accumulated hours of use (can be reset).
[Reset]	[Execute] / [Cancel]	–	Resets [Hours(Resettable)] to 0. [Execute]: Execute function.

[Maintenance] – [Firmware]

Displays version information.
When there are files that can be updated, “●” is displayed at the beginning of the following menu items.
[Maintenance]
[Firmware]
[Firmware Update]

Menu item	Sub-item setting	Factory default value	Description
[Version Number]	Vx.xx	–	Displays the software version of the unit.
[Firmware Update]	[Execute] / [Cancel]	–	Updates the firmware of the unit. **Note** ● The update cannot be performed unless the battery remaining capacity is 51% or higher. Use a sufficiently charged battery pack.
[Lens Version]	Vxx	–	Displays the version number of the E-mount lens and lens adaptor.

TP1002215358

5-076-802-11(2) Copyright 2026 Sony Corporation

[ISO/Gain] Settings and Default Values

The range of [ISO/Gain] settings and default values vary depending on the [Mode] / [Target Display] / [Base Look Select] / [Base Sensitivity] / [Base ISO] settings.

Custom shooting mode

When [Mode] is set to [ISO], [Target Display] is set to [SDR(BT.709)], and [Base Look Select] is set to a preset base look

✓: Supported
×: Not supported

[Base Sensitivity]	[High]	[Mid]	[Low]	[Low(Dual Gain)]
ISO 320	×	×	✓ (default value)	✓ (default value)
ISO 400	×	×	✓	✓
ISO 500	×	×	✓	✓
ISO 640	×	×	✓	✓
ISO 800	×	×	✓	✓
ISO 1000	×	×	✓	✓
ISO 1250	×	×	✓	✓
ISO 1600	×	✓ (default value)	✓	✓
ISO 2000	×	✓	✓	✓
ISO 2500	×	✓	✓	✓
ISO 3200	×	✓	✓	×
ISO 4000	×	✓	✓	×
ISO 5000	✓ (default value)	✓	✓	×
ISO 6400	✓	✓	✓	×
ISO 8000	✓	✓	✓[1)]	×
ISO 10000	✓	✓	✓[1)]	×
ISO 12800	✓	✓	✓[1)]	×
ISO 16000	✓	✓	✓[1)]	×
ISO 20000	✓	✓	✓[1)]	×
ISO 25600	✓	✓	✓[1)]	×
ISO 32000	✓	✓	×	×
ISO 40000	✓	✓[1)]	×	×

[Base Sensitivity]	[High]	[Mid]	[Low]	[Low(Dual Gain)]
ISO 51200	✓	✓[1)]	×	×
ISO 64000	✓	✓[1)]	×	×
ISO 80000	✓	✓[1)]	×	×
ISO 102400	✓	✓[1)]	×	×
ISO 128000	✓[1)]	✓[1)]	×	×
ISO 160000	✓[1)]	×	×	×
ISO 204800	✓[1)]	×	×	×
ISO 256000	✓[1)]	×	×	×
ISO 320000	✓[1)]	×	×	×
ISO 409600	✓[1)]	×	×	×

1) Cannot be configured when [Shooting] – [Image Stabilization] – [SteadyShot] is set to [Dynamic Active] in the full menu

When [Mode] is set to [ISO], [Target Display] is set to [HDR(HLG)], and [Base Look Select] is set to a preset base look

✓: Supported
×: Not supported

[Base Sensitivity]	[High]	[Mid]	[Low]	[Low(Dual Gain)]
ISO 320	×	×	×	×
ISO 400	×	×	×	×
ISO 500	×	×	×	×
ISO 640	×	×	×	×
ISO 800	×	×	✓ (default value)	✓ (default value)
ISO 1000	×	×	✓	✓
ISO 1250	×	×	✓	✓
ISO 1600	×	×	✓	✓
ISO 2000	×	×	✓	✓
ISO 2500	×	×	✓	✓
ISO 3200	×	×	✓	✓
ISO 4000	×	✓ (default value)	✓	✓
ISO 5000	×	✓	✓	✓
ISO 6400	×	✓	✓	✓
ISO 8000	×	✓	✓	×
ISO 10000	×	✓	✓	×
ISO 12800	✓ (default value)	✓	✓	×

[Base Sensitivity]	[High]	[Mid]	[Low]	[Low(Dual Gain)]
ISO 16000	✓	✓	✓	×
ISO 20000	✓	✓	✓[1)]	×
ISO 25600	✓	✓	✓[1)]	×
ISO 32000	✓	✓	×	×
ISO 40000	✓	✓	×	×
ISO 51200	✓	✓	×	×
ISO 64000	✓	✓	×	×
ISO 80000	✓	✓	×	×
ISO 102400	✓	✓[1)]	×	×
ISO 128000	✓	✓[1)]	×	×
ISO 160000	✓	×	×	×
ISO 204800	✓	×	×	×
ISO 256000	✓	×	×	×
ISO 320000	✓[1)]	×	×	×
ISO 409600	✓[1)]	×	×	×

1) Cannot be configured when [Shooting] – [Image Stabilization] – [SteadyShot] is set to [Dynamic Active] in the full menu

When [Mode] is set to [ISO] and [Base Look Select] is set to a user base look

✓: Supported
×: Not supported

[Base Sensitivity]	[High]	[Mid]	[Low]	[Low(Dual Gain)]
ISO 320	×	×	×	×
ISO 400	×	×	×	×
ISO 500	×	×	×	×
ISO 640	×	×	×	×
ISO 800	×	×	✓ (default value)	✓ (default value)
ISO 1000	×	×	✓	✓
ISO 1250	×	×	✓	✓
ISO 1600	×	×	✓	✓
ISO 2000	×	×	✓	✓
ISO 2500	×	×	✓	✓
ISO 3200	×	×	✓	✓
ISO 4000	×	✓ (default value)	✓	✓
ISO 5000	×	✓	✓	✓

[Base Sensitivity]	[High]	[Mid]	[Low]	[Low(Dual Gain)]
ISO 6400	×	✓	✓	✓
ISO 8000	×	✓	✓	×
ISO 10000	×	✓	✓	×
ISO 12800	✓ (default value)	✓	✓	×
ISO 16000	✓	✓	✓	×
ISO 20000	✓	✓	✓[1)]	×
ISO 25600	✓	✓	✓[1)]	×
ISO 32000	✓	✓	×	×
ISO 40000	✓	✓	×	×
ISO 51200	✓	✓	×	×
ISO 64000	✓	✓	×	×
ISO 80000	✓	✓	×	×
ISO 102400	✓	✓[1)]	×	×
ISO 128000	✓	✓[1)]	×	×
ISO 160000	✓	×	×	×
ISO 204800	✓	×	×	×
ISO 256000	✓	×	×	×
ISO 320000	✓[1)]	×	×	×
ISO 409600	✓[1)]	×	×	×

1) Cannot be configured when [Shooting] – [Image Stabilization] – [SteadyShot] is set to [Dynamic Active] in the full menu

When [Mode] is set to [dB], [Target Display] is set to [SDR(BT.709)], and [Base Look Select] is set to a preset base look

✓: Supported
×: Not supported

[Base Sensitivity]	[High]	[Mid]	[Low]	[Low(Dual Gain)]
−3dB	✓	✓	✓	✓
−2dB	✓	✓	✓	✓
−1dB	✓	✓	✓	✓
0dB	✓ (default value)	✓ (default value)	✓ (default value)	✓ (default value)
1dB	✓	✓	✓	✓
2dB	✓	✓	✓	✓
3dB	✓	✓	✓	✓
4dB	✓	✓	✓	✓

[Base Sensitivity]	[High]	[Mid]	[Low]	[Low(Dual Gain)]
5dB	✓	✓	✓	✓
6dB	✓	✓	✓	✓
7dB	✓	✓	✓	✓
8dB	✓	✓	✓	✓
9dB	✓	✓	✓	✓
10dB	✓	✓	✓	✓
11dB	✓	✓	✓	✓
12dB	✓	✓	✓	✓
13dB	✓	✓	✓	✓
14dB	✓	✓	✓	✓
15dB	✓	✓	✓	✓
16dB	✓	✓	✓	✓
17dB	✓	✓	✓	✓
18dB	✓	✓	✓	✓
19dB	✓	✓	✓	×
20dB	✓	✓	✓	×
21dB	✓	✓	✓	×
22dB	✓	✓	✓	×
23dB	✓	✓	✓	×
24dB	✓	✓	✓	×
25dB	✓	✓	✓	×
26dB	✓	✓	✓	×
27dB	✓[1)]	✓[1)]	✓[1)]	×
28dB	✓[1)]	✓[1)]	✓[1)]	×
29dB	✓[1)]	✓[1)]	✓[1)]	×
30dB	✓[1)]	✓[1)]	✓[1)]	×
31dB	✓[1)]	✓[1)]	✓[1)]	×
32dB	✓[1)]	✓[1)]	✓[1)]	×
33dB	✓[1)]	✓[1)]	✓[1)]	×
34dB	✓[1)]	✓[1)]	✓[1)]	×
35dB	✓[1)]	✓[1)]	✓[1)]	×
36dB	✓[1)]	✓[1)]	✓[1)]	×
37dB	✓[1)]	✓[1)]	✓[1)]	×

[Base Sensitivity]	[High]	[Mid]	[Low]	[Low(Dual Gain)]
38dB	✓[1)]	✓[1)]	✓[1)]	×

1) Cannot be configured when [Shooting] – [Image Stabilization] – [SteadyShot] is set to [Dynamic Active] in the full menu

When [Mode] is set to [dB], [Target Display] is set to [SDR(BT.709)], and [Base Look Select] is set to a user base look

✓: Supported
×: Not supported

[Base Sensitivity]	[High]	[Mid]	[Low]	[Low(Dual Gain)]
−3dB	✓	✓	✓	✓
−2dB	✓	✓	✓	✓
−1dB	✓	✓	✓	✓
0dB	✓ (default value)	✓ (default value)	✓ (default value)	✓ (default value)
1dB	✓	✓	✓	✓
2dB	✓	✓	✓	✓
3dB	✓	✓	✓	✓
4dB	✓	✓	✓	✓
5dB	✓	✓	✓	✓
6dB	✓	✓	✓	✓
7dB	✓	✓	✓	✓
8dB	✓	✓	✓	✓
9dB	✓	✓	✓	✓
10dB	✓	✓	✓	✓
11dB	✓	✓	✓	✓
12dB	✓	✓	✓	✓
13dB	✓	✓	✓	✓
14dB	✓	✓	✓	✓
15dB	✓	✓	✓	✓
16dB	✓	✓	✓	✓
17dB	✓	✓	✓	✓
18dB	✓	✓	✓	✓
19dB	✓	✓	✓	×
20dB	✓	✓	✓	×
21dB	✓	✓	✓	×
22dB	✓	✓	✓	×
23dB	✓	✓	✓	×

[Base Sensitivity]	[High]	[Mid]	[Low]	[Low(Dual Gain)]
24dB	✓	✓	✓	×
25dB	✓	✓	✓	×
26dB	✓	✓	✓	×
27dB	✓[1)]	✓[1)]	✓[1)]	×
28dB	✓[1)]	✓[1)]	✓[1)]	×
29dB	✓[1)]	✓[1)]	✓[1)]	×
30dB	✓[1)]	✓[1)]	✓[1)]	×
31dB	×	×	×	×
32dB	×	×	×	×
33dB	×	×	×	×
34dB	×	×	×	×
35dB	×	×	×	×
36dB	×	×	×	×
37dB	×	×	×	×
38dB	×	×	×	×

1) Cannot be configured when [Shooting] – [Image Stabilization] – [SteadyShot] is set to [Dynamic Active] in the full menu

When [Mode] is set to [dB] and [Target Display] is set to [HDR(HLG)]

✓: Supported
×: Not supported

[Base Sensitivity]	[High]	[Mid]	[Low]	[Low(Dual Gain)]
−3dB	✓	✓	✓	✓
−2dB	✓	✓	✓	✓
−1dB	✓	✓	✓	✓
0dB	✓ (default value)	✓ (default value)	✓ (default value)	✓ (default value)
1dB	✓	✓	✓	✓
2dB	✓	✓	✓	✓
3dB	✓	✓	✓	✓
4dB	✓	✓	✓	✓
5dB	✓	✓	✓	✓
6dB	✓	✓	✓	✓
7dB	✓	✓	✓	✓
8dB	✓	✓	✓	✓
9dB	✓	✓	✓	✓

[Base Sensitivity]	[High]	[Mid]	[Low]	[Low(Dual Gain)]
10dB	✓	✓	✓	✓
11dB	✓	✓	✓	✓
12dB	✓	✓	✓	✓
13dB	✓	✓	✓	✓
14dB	✓	✓	✓	✓
15dB	✓	✓	✓	✓
16dB	✓	✓	✓	✓
17dB	✓	✓	✓	✓
18dB	✓	✓	✓	✓
19dB	✓	✓	✓	×
20dB	✓	✓	✓	×
21dB	✓	✓	✓	×
22dB	✓	✓	✓	×
23dB	✓	✓	✓	×
24dB	✓	✓	✓	×
25dB	✓	✓	✓	×
26dB	✓	✓	✓	×
27dB	✓[1)]	✓[1)]	✓[1)]	×
28dB	✓[1)]	✓[1)]	✓[1)]	×
29dB	✓[1)]	✓[1)]	✓[1)]	×
30dB	✓[1)]	✓[1)]	✓[1)]	×
31dB	×	×	×	×
32dB	×	×	×	×
33dB	×	×	×	×
34dB	×	×	×	×
35dB	×	×	×	×
36dB	×	×	×	×
37dB	×	×	×	×
38dB	×	×	×	×

1) Cannot be configured when [Shooting] – [Image Stabilization] – [SteadyShot] is set to [Dynamic Active] in the full menu

Note

- The minimum value is 0dB when shooting HFR (high frame rate) or when the project frame rate is 119.88P/100P.

Log shooting mode ([Flexible ISO])

✓: Supported
×: Not supported

[Base ISO]	[ISO 12800]	[ISO 4000]	[ISO 800]	[ISO 800(Dual Gain)]
ISO 320	×	×	×	×
ISO 400	×	×	×	×
ISO 500	×	×	×	×
ISO 640	×	×	×	×
ISO 800	×	×	✓ (default value)	✓ (default value)
ISO 1000	×	×	✓	✓
ISO 1250	×	×	✓	✓
ISO 1600	×	×	✓	✓
ISO 2000	×	×	✓	✓
ISO 2500	×	×	✓	✓
ISO 3200	×	×	✓	✓
ISO 4000	×	✓ (default value)	✓	✓
ISO 5000	×	✓	✓	✓
ISO 6400	×	✓	✓	✓
ISO 8000	×	✓	✓	×
ISO 10000	×	✓	✓	×
ISO 12800	✓ (default value)	✓	✓	×
ISO 16000	✓	✓	✓	×
ISO 20000	✓	✓	✓[1)]	×
ISO 25600	✓	✓	✓[1)]	×
ISO 32000	✓	✓	×	×
ISO 40000	✓	✓	×	×
ISO 51200	✓	✓	×	×
ISO 64000	✓	✓	×	×
ISO 80000	✓	✓	×	×
ISO 102400	✓	✓[1)]	×	×
ISO 128000	✓	✓[1)]	×	×
ISO 160000	✓	×	×	×
ISO 204800	✓	×	×	×
ISO 256000	✓	×	×	×
ISO 320000	✓[1)]	×	×	×

[Base ISO]	[ISO 12800]	[ISO 4000]	[ISO 800]	[ISO 800(Dual Gain)]
ISO 409600	✓[1)]	×	×	×

1) Cannot be configured when [Shooting] – [Image Stabilization] – [SteadyShot] is set to [Dynamic Active] in the full menu

TP1002215359

5-076-802-11(2) Copyright 2026 Sony Corporation

Interchangeable Lens Digital Camera
ILME-FX5/ILME-FX5B

[AGC Limit] Settings and Default Values

The range of [AGC Limit] settings and default values vary depending on the [Mode] / [Target Display] / [Base Look Select] settings.

Custom shooting mode

When [Mode] is set to [ISO], [Target Display] is set to [SDR(BT.709)], and [Base Look Select] is set to a preset base look

✓: Supported
×: Not supported

[Base Sensitivity]	[High]	[Mid]	[Low]	[Low(Dual Gain)]
ISO 320	×	×	×	×
ISO 400	×	×	✓	✓
ISO 500	×	×	✓	✓
ISO 640	×	×	✓	✓
ISO 800	×	×	✓	✓
ISO 1000	×	×	✓	✓
ISO 1250	×	×	✓	✓
ISO 1600	×	×	✓	✓
ISO 2000	×	✓	✓ (default value)	✓ (default value)
ISO 2500	×	✓	✓	✓
ISO 3200	×	✓	✓	×
ISO 4000	×	✓	✓	×
ISO 5000	×	✓	✓	×
ISO 6400	✓	✓	✓	×
ISO 8000	✓	✓	✓[1)]	×
ISO 10000	✓	✓ (default value)	✓[1)]	×
ISO 12800	✓	✓	✓[1)]	×
ISO 16000	✓	✓	✓[1)]	×
ISO 20000	✓	✓	✓[1)]	×
ISO 25600	✓	✓	✓[1)]	×
ISO 32000	✓ (default value)	✓	×	×
ISO 40000	✓	✓[1)]	×	×

[Base Sensitivity]	[High]	[Mid]	[Low]	[Low(Dual Gain)]
ISO 51200	✓	✓[1)]	×	×
ISO 64000	✓	✓[1)]	×	×
ISO 80000	✓	✓[1)]	×	×
ISO 102400	✓	✓[1)]	×	×
ISO 128000	✓[1)]	✓[1)]	×	×
ISO 160000	✓[1)]	×	×	×
ISO 204800	✓[1)]	×	×	×
ISO 256000	✓[1)]	×	×	×
ISO 320000	✓[1)]	×	×	×
ISO 409600	✓[1)]	×	×	×

1) Cannot be configured when [Shooting] – [Image Stabilization] – [SteadyShot] is set to [Dynamic Active] in the full menu

When [Mode] is set to [ISO], [Target Display] is set to [HDR(HLG)], and [Base Look Select] is set to a preset base look

✓: Supported
×: Not supported

[Base Sensitivity]	[High]	[Mid]	[Low]	[Low(Dual Gain)]
ISO 320	×	×	×	×
ISO 400	×	×	×	×
ISO 500	×	×	×	×
ISO 640	×	×	×	×
ISO 800	×	×	×	×
ISO 1000	×	×	✓	✓
ISO 1250	×	×	✓	✓
ISO 1600	×	×	✓	✓
ISO 2000	×	×	✓	✓
ISO 2500	×	×	✓	✓
ISO 3200	×	×	✓	✓
ISO 4000	×	×	✓	✓
ISO 5000	×	✓	✓ (default value)	✓ (default value)
ISO 6400	×	✓	✓	✓
ISO 8000	×	✓	✓	×
ISO 10000	×	✓	✓	×
ISO 12800	×	✓	✓	×

[Base Sensitivity]	[High]	[Mid]	[Low]	[Low(Dual Gain)]
ISO 16000	✓	✓	✓	×
ISO 20000	✓	✓	✓[1)]	×
ISO 25600	✓	✓ (default value)	✓[1)]	×
ISO 32000	✓	✓	×	×
ISO 40000	✓	✓	×	×
ISO 51200	✓	✓	×	×
ISO 64000	✓	✓	×	×
ISO 80000	✓ (default value)	✓	×	×
ISO 102400	✓	✓[1)]	×	×
ISO 128000	✓	✓[1)]	×	×
ISO 160000	✓	×	×	×
ISO 204800	✓	×	×	×
ISO 256000	✓	×	×	×
ISO 320000	✓[1)]	×	×	×
ISO 409600	✓[1)]	×	×	×

1) Cannot be configured when [Shooting] – [Image Stabilization] – [SteadyShot] is set to [Dynamic Active] in the full menu

When [Mode] is set to [ISO] and [Base Look Select] is set to a user base look

✓: Supported
×: Not supported

[Base Sensitivity]	[High]	[Mid]	[Low]	[Low(Dual Gain)]
ISO 320	×	×	×	×
ISO 400	×	×	×	×
ISO 500	×	×	×	×
ISO 640	×	×	×	×
ISO 800	×	×	×	×
ISO 1000	×	×	✓	✓
ISO 1250	×	×	✓	✓
ISO 1600	×	×	✓	✓
ISO 2000	×	×	✓	✓
ISO 2500	×	×	✓	✓
ISO 3200	×	×	✓	✓
ISO 4000	×	×	✓	✓
ISO 5000	×	✓	✓ (default value)	✓ (default value)

[Base Sensitivity]	[High]	[Mid]	[Low]	[Low(Dual Gain)]
ISO 6400	×	✓	✓	✓
ISO 8000	×	✓	✓	×
ISO 10000	×	✓	✓	×
ISO 12800	×	✓	✓	×
ISO 16000	✓	✓	✓	×
ISO 20000	✓	✓	✓[1)]	×
ISO 25600	✓	✓ (default value)	✓[1)]	×
ISO 32000	✓	✓	×	×
ISO 40000	✓	✓	×	×
ISO 51200	✓	✓	×	×
ISO 64000	✓	✓	×	×
ISO 80000	✓ (default value)	✓	×	×
ISO 102400	✓	✓[1)]	×	×
ISO 128000	✓	✓[1)]	×	×
ISO 160000	✓	×	×	×
ISO 204800	✓	×	×	×
ISO 256000	✓	×	×	×
ISO 320000	✓[1)]	×	×	×
ISO 409600	✓[1)]	×	×	×

1) Cannot be configured when [Shooting] – [Image Stabilization] – [SteadyShot] is set to [Dynamic Active] in the full menu

When [Mode] is set to [dB], [Target Display] is set to [SDR(BT.709)], and [Base Look Select] is set to a preset base look

✓: Supported
×: Not supported

[Base Sensitivity]	[High]	[Mid]	[Low]	[Low(Dual Gain)]
−3dB	×	×	×	×
−2dB	×	×	×	×
−1dB	×	×	×	×
0dB	×	×	×	×
1dB	×	×	×	×
2dB	×	×	×	×
3dB	✓	✓	✓	✓
4dB	×	×	×	×

[Base Sensitivity]	[High]	[Mid]	[Low]	[Low(Dual Gain)]
5dB	×	×	×	×
6dB	✓	✓	✓	✓
7dB	×	×	×	×
8dB	×	×	×	×
9dB	✓	✓	✓	✓
10dB	×	×	×	×
11dB	×	×	×	×
12dB	✓	✓	✓	✓
13dB	×	×	×	×
14dB	×	×	×	×
15dB	✓ (default value)	✓ (default value)	✓ (default value)	✓ (default value)
16dB	×	×	×	×
17dB	×	×	×	×
18dB	✓	✓	✓	✓
19dB	×	×	×	×
20dB	×	×	×	×
21dB	✓	✓	✓	×
22dB	×	×	×	×
23dB	×	×	×	×
24dB	✓	✓	✓	×
25dB	×	×	×	×
26dB	×	×	×	×
27dB	✓[1)]	✓[1)]	✓[1)]	×
28dB	×	×	×	×
29dB	×	×	×	×
30dB	✓[1)]	✓[1)]	✓[1)]	×
31dB	×	×	×	×
32dB	×	×	×	×
33dB	✓[1)]	✓[1)]	✓[1)]	×
34dB	×	×	×	×
35dB	×	×	×	×
36dB	✓[1)]	✓[1)]	✓[1)]	×
37dB	×	×	×	×

[Base Sensitivity]	[High]	[Mid]	[Low]	[Low(Dual Gain)]
38dB	×	×	×	×

1) Cannot be configured when [Shooting] – [Image Stabilization] – [SteadyShot] is set to [Dynamic Active] in the full menu

When [Mode] is set to [dB], [Target Display] is set to [SDR(BT.709)], and [Base Look Select] is set to a user base look

✓: Supported
×: Not supported

[Base Sensitivity]	[High]	[Mid]	[Low]	[Low(Dual Gain)]
−3dB	×	×	×	×
−2dB	×	×	×	×
−1dB	×	×	×	×
0dB	×	×	×	×
1dB	×	×	×	×
2dB	×	×	×	×
3dB	✓	✓	✓	✓
4dB	×	×	×	×
5dB	×	×	×	×
6dB	✓	✓	✓	✓
7dB	×	×	×	×
8dB	×	×	×	×
9dB	✓	✓	✓	✓
10dB	×	×	×	×
11dB	×	×	×	×
12dB	✓	✓	✓	✓
13dB	×	×	×	×
14dB	×	×	×	×
15dB	✓ (default value)	✓ (default value)	✓ (default value)	✓ (default value)
16dB	×	×	×	×
17dB	×	×	×	×
18dB	✓	✓	✓	✓
19dB	×	×	×	×
20dB	×	×	×	×
21dB	✓	✓	✓	×
22dB	×	×	×	×
23dB	×	×	×	×

[Base Sensitivity]	[High]	[Mid]	[Low]	[Low(Dual Gain)]
24dB	✓	✓	✓	×
25dB	×	×	×	×
26dB	×	×	×	×
27dB	✓[1)]	✓[1)]	✓[1)]	×
28dB	×	×	×	×
29dB	×	×	×	×
30dB	✓[1)]	✓[1)]	✓[1)]	×
31dB	×	×	×	×
32dB	×	×	×	×
33dB	×	×	×	×
34dB	×	×	×	×
35dB	×	×	×	×
36dB	×	×	×	×
37dB	×	×	×	×
38dB	×	×	×	×

1) Cannot be configured when [Shooting] – [Image Stabilization] – [SteadyShot] is set to [Dynamic Active] in the full menu

When [Mode] is set to [dB] and [Target Display] is set to [HDR(HLG)]

✓: Supported
×: Not supported

[Base Sensitivity]	[High]	[Mid]	[Low]	[Low(Dual Gain)]
−3dB	×	×	×	×
−2dB	×	×	×	×
−1dB	×	×	×	×
0dB	×	×	×	×
1dB	×	×	×	×
2dB	×	×	×	×
3dB	✓	✓	✓	✓
4dB	×	×	×	×
5dB	×	×	×	×
6dB	✓	✓	✓	✓
7dB	×	×	×	×
8dB	×	×	×	×
9dB	✓	✓	✓	✓

[Base Sensitivity]	[High]	[Mid]	[Low]	[Low(Dual Gain)]
10dB	×	×	×	×
11dB	×	×	×	×
12dB	✓	✓	✓	✓
13dB	×	×	×	×
14dB	×	×	×	×
15dB	✓ (default value)	✓ (default value)	✓ (default value)	✓ (default value)
16dB	×	×	×	×
17dB	×	×	×	×
18dB	✓	✓	✓	✓
19dB	×	×	×	×
20dB	×	×	×	×
21dB	✓	✓	✓	×
22dB	×	×	×	×
23dB	×	×	×	×
24dB	✓	✓	✓	×
25dB	×	×	×	×
26dB	×	×	×	×
27dB	✓[1)]	✓[1)]	✓[1)]	×
28dB	×	×	×	×
29dB	×	×	×	×
30dB	✓[1)]	✓[1)]	✓[1)]	×
31dB	×	×	×	×
32dB	×	×	×	×
33dB	×	×	×	×
34dB	×	×	×	×
35dB	×	×	×	×
36dB	×	×	×	×
37dB	×	×	×	×
38dB	×	×	×	×

1) Cannot be configured when [Shooting] – [Image Stabilization] – [SteadyShot] is set to [Dynamic Active] in the full menu

Note

- The minimum value is 0dB when shooting HFR (high frame rate) or when the project frame rate is 119.88P/100P.

Log shooting mode ([Flexible ISO])

✓: Supported
×: Not supported

[Base ISO]	[ISO 12800]	[ISO 4000]	[ISO 800]	[ISO 800(Dual Gain)]
ISO 320	×	×	×	×
ISO 400	×	×	×	×
ISO 500	×	×	×	×
ISO 640	×	×	×	×
ISO 800	×	×	×	×
ISO 1000	×	×	✓	✓
ISO 1250	×	×	✓	✓
ISO 1600	×	×	✓	✓
ISO 2000	×	×	✓	✓
ISO 2500	×	×	✓	✓
ISO 3200	×	×	✓	✓
ISO 4000	×	×	✓	✓
ISO 5000	×	✓	✓ (default value)	✓ (default value)
ISO 6400	×	✓	✓	✓
ISO 8000	×	✓	✓	×
ISO 10000	×	✓	✓	×
ISO 12800	×	✓	✓	×
ISO 16000	✓	✓	✓	×
ISO 20000	✓	✓	✓[1)]	×
ISO 25600	✓	✓ (default value)	✓[1)]	×
ISO 32000	✓	✓	×	×
ISO 40000	✓	✓	×	×
ISO 51200	✓	✓	×	×
ISO 64000	✓	✓	×	×
ISO 80000	✓ (default value)	✓	×	×
ISO 102400	✓	✓[1)]	×	×
ISO 128000	✓	✓[1)]	×	×
ISO 160000	✓	×	×	×
ISO 204800	✓	×	×	×
ISO 256000	✓	×	×	×
ISO 320000	✓[1)]	×	×	×

[Base ISO]	[ISO 12800]	[ISO 4000]	[ISO 800]	[ISO 800(Dual Gain)]
ISO 409600	✓[1)]	×	×	×

1) Cannot be configured when [Shooting] – [Image Stabilization] – [SteadyShot] is set to [Dynamic Active] in the full menu

TP1002215360

5-076-802-11(2) Copyright 2026 Sony Corporation

[Video Format] / [Quality] / [Bit Rate] Settings

The range of [Video Format] / [Quality] / [Bit Rate] settings vary depending on the [Project Frame Rate] / [Codec] settings.

[Project Frame Rate]	[Codec]	[Video Format]	[Quality]		
			[High]	[Mid]	[Low]
119.88	XAVC HS-L 422	3840×2160P	280	280	280
	XAVC HS-L 420	3840×2160P	200	200	200
	XAVC S-L 422	3840×2160P	280	280	280
	XAVC S-L 420	3840×2160P	200	200	200
		1920×1080P	100	60	60
100	XAVC HS-L 422	3840×2160P	280	280	280
	XAVC HS-L 420	3840×2160P	200	200	200
	XAVC S-L 422	3840×2160P	280	280	280
	XAVC S-L 420	3840×2160P	200	200	200
		1920×1080P	100	60	60
59.94	XAVC HS-L 422	3840×2160P	200	100	100
	XAVC HS-L 420	3840×2160P	150	75	45
	XAVC S-I	4096×2160P	600	600	600
		3840×2160P	600	600	600
		1920×1080P	222	222	222
	XAVC S-L 422	3840×2160P	200	200	200
		1920×1080P	50	50	50
	XAVC S-L 420	3840×2160P	150	150	150
		1920×1080P	50	25	25

[Project Frame Rate]	[Codec]	[Video Format]	[Quality]		
			[High]	[Mid]	[Low]
50	XAVC HS-L 422	3840×2160P	200	100	100
	XAVC HS-L 420	3840×2160P	150	75	45
	XAVC S-I	4096×2160P	500	500	500
		3840×2160P	500	500	500
		1920×1080P	185	185	185
	XAVC S-L 422	3840×2160P	200	200	200
		1920×1080P	50	50	50
	XAVC S-L 420	3840×2160P	150	150	150
		1920×1080P	50	25	25
29.97	XAVC S-I	4096×2160P	300	300	300
		3840×2160P	300	300	300
		1920×1080P	111	111	111
	XAVC S-L 422	3840×2160P	140	140	140
		1920×1080P	50	50	50
	XAVC S-L 420	3840×2160P	100	60	60
		1920×1080P	50	16	16
25	XAVC S-I	4096×2160P	250	250	250
		3840×2160P	250	250	250
		1920×1080P	93	93	93
	XAVC S-L 422	3840×2160P	140	140	140
		1920×1080P	50	50	50
	XAVC S-L 420	3840×2160P	100	60	60
		1920×1080P	50	16	16
24	XAVC S-I	4096×2160P	240	240	240
23.98	XAVC HS-L 422	3840×2160P	100	50	50
	XAVC HS-L 420	3840×2160P	100	50	30
	XAVC S-I	4096×2160P	240	240	240
		3840×2160P	240	240	240
		1920×1080P	89	89	89
	XAVC S-L 422	3840×2160P	100	100	100
		1920×1080P	50	50	50
	XAVC S-L 420	3840×2160P	100	60	60
		1920×1080P	50	50	50

5-076-802-11(2) Copyright 2026 Sony Corporation

Interchangeable Lens Digital Camera
ILME-FX5/ILME-FX5B

Image Quality Settings Saved for Each Shooting Mode

The current status of configuration items related to image quality are saved for each of the following shooting modes. When you change the shooting mode, the settings that are saved for the target shooting mode are applied.

- [Custom] – [SDR(BT.709)]
- [Custom] – [HDR(HLG)]
- [Flexible ISO]

The configuration items related to image quality which are saved for each shooting mode are shown below.
✓: Item is saved.
×: Item is not saved.

Configuration item			Shooting mode				
			[Custom]		[Flexible ISO]	[Cine EI Quick]	[Cine EI]
			[SDR(BT.709)]	[HDR(HLG)]			
[Shooting] Menu	[ISO/Gain]	[ISO/Gain Select]	✓[1]		✓	×	
	[Exposure Index]	[EI Select]	×		×	✓	✓
		[Base Sensitivity]	✓		No		
		[Base ISO]	No		✓[4]	×[3]	✓[4]
	[White Balance]		✓				
	[White Balance Setting]		✓				
	[LUT On/Off]		×		✓		
	[Noise Suppression]	[Setting(Custom)]	✓	✓	×		
		[Level(Custom)]	✓	✓	×		
		[Setting (Cine EI/Flex. ISO)]	×		✓		
		[Level (Cine EI/Flex. ISO)]	×		✓		

Configuration item			Shooting mode				
			[Custom]		[Flexible ISO]	[Cine EI Quick]	[Cine EI]
			[SDR(BT.709)]	[HDR(HLG)]			
[Paint/Look] Menu	[Base Look]	[Select]	✓	✓	✓		
		[Input][2)]	✓				
		[Output][2)]	✓				
		[AE Level Offset][2)]	✓				
	[Black]		✓	✓	×		
	[Knee]	[Auto Knee]	✓	×	×		
		Other than above	✓	✓	×		
	[Detail]	–	✓	✓	×		
	[Matrix]	–	✓	✓	×		
	[Multi Matrix]	–	✓	✓	×		

1) Separate ISO sensitivity settings may be saved for [Custom] – [SDR(BT.709)] / [HDR(HLG)].
2) Settings are saved for each [Base Look], and do not depend on the shooting mode.
3) The standard ISO sensitivity switches in conjunction with [Exposure Index].
4) Settings are shared between [Flexible ISO] and [Cine EI].

TP1002215362

5-076-802-11(2) Copyright 2026 Sony Corporation

Saving Settings to a File

You can save the settings of the full menu to a memory card inserted into card slot B of the unit. This allows you to quickly recall an appropriate set of menu settings for the current situation.
An All file saves the configuration data of all menus. You can save up to 64 files on a memory card.

Note

- For details about the content saved in an All file, see the following topic.
  Items Saved in Files

Saving to a memory card

You can save an All file to a memory card.

1. **Insert a memory card into a card slot B.**
2. **Select [Project] – [All File] – [Save to Media(B)] – [Execute] in the full menu.**
   A file save destination screen appears.
3. **Select a [No File] row on the save destination screen.**
   Selecting a row with a [File ID] entry will overwrite the selected file.
   The [File ID] value assigned when saving can be changed using the menu.
4. **Select [Execute] on the confirmation screen.**

Loading from a memory card

You can load an All file from a memory card.

1. **Insert a memory card on which a file is saved into card slot B.**
2. **Select [Project] – [All File] – [Load from Media(B)] – [Execute] in the full menu.**
   A file list screen appears.
3. **Select a file to load.**
   A confirmation screen appears.
4. **Select [Execute].**

Note

- The unit will reboot automatically after loading configuration data.
- When [Project] – [All File] – [Load Network Data] is set to [Off] in the full menu, all settings in the All file are loaded except [Network] menu settings.

Changing the file ID

You can change the file ID of an All file.

1. **Select [Project] – [All File] – [File ID] in the full menu.**
   A screen for editing the file ID appears.
2. **Select the character type or character you want to enter using touch operation or the multi-function dial/multi selector.**
   For details, see “Entering a Character String.”
3. **When finished entering characters, select [Done].**

Related Topic

- Entering a Character String

TP1002215363

5-076-802-11(2) Copyright 2026 Sony Corporation

Connecting an External Device to the HDMI Output

Enable/disable the output and set the output format using [Monitoring] in the menu.

To start recording on the unit and external device simultaneously

When using HDMI signal output, set [TC/Media] – [HDMI TC Out] – [Setting] to [On] in the full menu and configure the following setting to output a REC trigger signal to the external device connected to the HDMI output connector to start recording in sync with the unit.
[Project] – [HDMI Rec Trigger] – [Setting] – [On]

Note

- If a connected external device does not support a REC trigger signal, the device cannot be operated.

TP1002215366

5-076-802-11(2) Copyright 2026 Sony Corporation

Synchronizing Timecode with an External Device

You can synchronize the timecode of the unit with an external device. A VMC-BNCU1 dedicated adaptor cable (sold separately) is required to connect the USB PORT 2 connector of the unit to the BNC output connector of a commercially available BNC cable.

Locking to the timecode of another device

1. **Set the external device that will be the timecode source to a mode where the timecode output is continuously updated.**
2. **Set [TC/Media] – [Timecode] in the full menu as follows.**
   [Mode] – [Preset]
   [Run] – [Free Run]
3. **Set [TC/Media] – [Timecode] – [USB Timecode] to [On(PORT2)] in the full menu.**
4. **Press an assignable button assigned with [DURATION/TC/U-BIT] to display the timecode on the screen.**
5. **Connect the BNC output connector of the BNC cable (A) to the USB Type-C connector (USB PORT 2) of the unit using the VMC-BNCU1 timecode adaptor cable (sold separately) (B).**

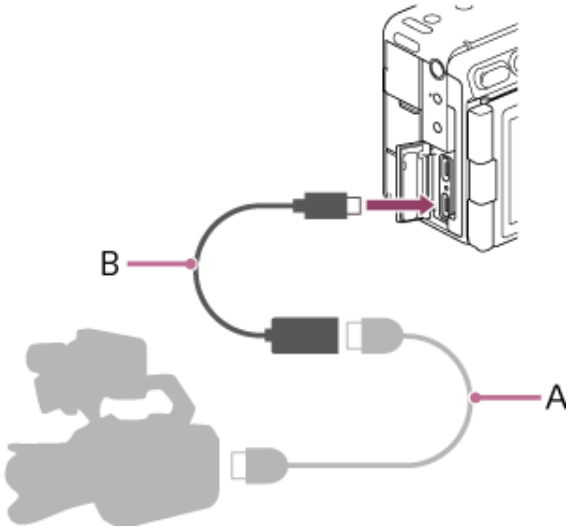

The timecode generator of the unit acquires lock with the reference timecode, and “EXT-LK” is displayed on the screen. Once about ten seconds have elapsed after the timecode locks, the external lock state is maintained even if the external reference timecode source is disconnected.

Note

- When the timecode locks, the timecode of the unit instantly acquires lock with the timecode of the external device and the timecode value of the external value appears in the timecode display area. However, do not start recording immediately. Wait for a few seconds until the timecode generator stabilizes before recording.
- If the frequency of the reference timecode and the frame frequency on the unit are not the same, lock cannot be acquired and the unit will not operate properly. If this occurs, the timecode will not acquire successful lock with the external timecode.
- When synchronizing the timecode, an offset of about one frame may occur. If the unit is used for an extended period without an external reference timecode connection, the timecode may drift significantly from the reference timecode.

To release the timecode lock

Change the [TC/Media] – [Timecode] setting in the full menu.
The timecode lock is canceled when the project frame rate is changed or if you start shooting after [Shooting] – [FPS] – [Fixed/Variable Select] is set to [Variable] in the full menu.

5-076-802-11(2) Copyright 2026 Sony Corporation

Using a Mobile Device

You can control the unit remotely using a mobile device application.

“Monitor & Control” application

For details about how to connect to the unit with a mobile device and how to operate the “Monitor & Control” application, refer to the Help Guide for the “Monitor & Control” application.

TP1002215368

5-076-802-11(2) Copyright 2026 Sony Corporation

Using a Bluetooth Remote Control

You can control the unit remotely using a Bluetooth remote control (sold separately). Visit the support portal for details about Bluetooth remote controls supported by the unit.
https://www.sony.com/electronics/support/articles/00266597?utm_source=glean
Check steps 1 and 2.

Pairing the unit and Bluetooth remote control

1. **Set [Network] – [Bluetooth] – [Setting] to [On] in the full menu.**
2. **Select [Network] – [Bluetooth] – [Pairing] – [Execute] in the full menu.**
   The pairing standby screen appears.
3. **Initiate pairing on the Bluetooth remote control.**
   For details about operation, refer to the operating instructions for the Bluetooth remote control.
   When paired successfully, a pairing completed confirmation screen appears on the unit.
4. **Select [OK].**
   Control of the unit using the Bluetooth remote control is enabled. After connecting for the first time, subsequently you can connect the unit and Bluetooth remote control just by setting [Bluetooth] – [Setting] to [On].

Hint

- The Bluetooth remote control is connected via Bluetooth only while controlling the unit from the Bluetooth remote control.
- If the unit does not respond correctly, check the following and pair the devices again.
  - Check that the unit is not connected via Bluetooth to another device.
  - Execute [Network] – [Network Reset] – [Reset] in the full menu.

Note

- When the unit is initialized, the pairing information is cleared. To use the Bluetooth remote control, pair the devices again.
- If Bluetooth communication is unstable, make sure there are no obstacles, such as other persons or metallic objects, between the unit and the Bluetooth remote control.
- If large volume communication is in progress, such as when streaming using the wireless LAN 2.4 GHz band, the response to the Bluetooth remote control may become unstable. In this case, consider using a wired LAN connection.
- When making a Bluetooth connection, only pair with devices you trust. Avoid random pairing requests or connections to unknown devices.
- When not using the Bluetooth remote control, turn the Bluetooth function off.
- Check the list of paired devices regularly and remove any unnecessary devices.
- If you delete the pairing information for the camera from your smartphone, delete the smartphone pairing information from [Manage Paired Device].

Checking the paired Bluetooth remote control

Select [Network] – [Bluetooth] – [Manage Paired Device] in the full menu to display the paired Bluetooth remote control.

Deleting a paired Bluetooth remote control

1. **Select [Network] – [Bluetooth] – [Manage Paired Device] in the full menu.**
2. **Select the Bluetooth remote control to delete.**
3. **Select [Execute].**

5-076-802-11(2) Copyright 2026 Sony Corporation

Remote Control via USB Connection Mode

Configure the following setting to use a device or application that supports remote control via USB connection mode.

1. **Set [Technical] – [USB] – [USB Cnct Mode (PORT1)] or [USB Cnct Mode (PORT2)] to [USB Remote] in the full menu.**
2. **Insert a USB cable into the configured USB port and connect the other end to the supported device.**

Note

- If a [USB connected...] message appears on a black screen, remove the USB cable to return to the shooting screen, set [Technical] – [USB] – [USB Cnct Mode (PORT1)] or [USB Cnct Mode (PORT2)] to [USB Remote] in the full menu and then connect the USB cable.
- Operation via a USB hub is not guaranteed.
- This function cannot be used on both ports at the same time.
- When using the USB connection mode function, remote control via an IP network, such as using Monitor & Control, is not available.
- This function does not operate if a USB cable is inserted during recording. Before starting to record, insert the USB cable and check the operation on the supported device.

TP1002495098

5-076-802-11(2) Copyright 2026 Sony Corporation

Managing/Editing Clips using a Computer

You can import clips to your computer, manage them on your computer, and edit them in a nonlinear editing system using a card reader (sold separately) or the mass storage mode of the unit.

Using a card reader (sold separately)

Connect a CFexpress Type A card reader or SD card reader to a computer using a USB cable, and insert a memory card into the card reader slot. The memory card is recognized as a computer extension drive. On supported computers, you can import clips faster than using the mass storage mode of the unit.

Using mass storage mode

Connect the unit and computer using mass storage mode. A memory card inserted in card slot A or B of the unit is recognized as a computer extension drive.

1. **Connect the USB Type-C connector (USB PORT 1) to the computer using a USB cable.**
2. **Turn the unit on.**
   When [Technical] – [USB] – [USB Cnct Mode (PORT1)] is set to [Off] in the full menu, the screen for selecting the USB function to enable appears. Select [Mass Storage (MSC)] from the drop-down list box.

Note

- When [Technical] – [USB] – [USB Cnct Mode (PORT1)] and [USB Cnct Mode (PORT2)] are set to other than [Off] in the full menu, mass storage mode cannot be used. Set to [Off].
- The USB connection confirmation message is not displayed while another message is displayed, for example, when formatting or restoring a memory card. The confirmation message is displayed when the formatting or restoring execution ends. The USB connection confirmation message is also not displayed when the clip properties screen is displayed. The message is displayed when processing ends or when you return to the clip list screen.

3. **Turn the multi-function dial to select [Execute].**
4. **On Windows, check that the card is added as a removable disk in the “My Computer” window.**
   On Mac, check that a folder called “NO NAME” or “Untitled” (editable) is created on the desktop.

Note

- Do not perform the following operations if the access lamp is lit red.
  - Turning the unit off
  - Disconnecting the power cord
  - Removing the memory card
  - Disconnecting the USB cable
- Operation is not guaranteed to work on all computers.

Using a nonlinear editing system

In a nonlinear editing system, editing software (sold separately) that supports the formats recorded by the unit is required.
Use dedicated application software to save the clips you want to edit on the HDD of the computer beforehand.

TP1002215370

5-076-802-11(2) Copyright 2026 Sony Corporation

HDMI Output Connector Output Formats

The resolution of the output format is limited by the [Project] – [Project Frame Rate] / [Video Format] settings in the menu or the [Project] – [Rec Format] – [Project Frame Rate] / [Video Format] settings in the full menu. The video will not be output if a higher resolution than the playback video resolution is configured.
The following table shows the output formats supported by the HDMI output connector.

[Project] – [Rec Format]			[Monitoring] – [Output Format]
[Project Frame Rate]	**[Codec]**	**[Video Format] / [Imager Mode]**	**[HDMI]**
100/119.88Hz	XAVC HS-L 422 XAVC HS-L 420 XAVC S-L 422 XAVC S-L 420	3840×2160 (16:9)	3840×2160/50P or 59.94P
			1920×1080/50P or 59.94P (default value)
			1920×1080/50i or 59.94i
	XAVC S-L 420	1920×1080 (16:9)	1920×1080/50P or 59.94P (default value)
			1920×1080/50i or 59.94i

[Project] – [Rec Format]			[Monitoring] – [Output Format]
[Project Frame Rate]	[Codec]	[Video Format] / [Imager Mode]	[HDMI]
50/59.94Hz	X-OCN LT X-OCN C1 X-OCN C2	FF 5K 3:2	4096×2160/50P or 59.94P
			1920×1080/50P or 59.94P (default value)
			1920×1080/50i or 59.94i
		FF 5K 17:9	4096×2160/50P or 59.94P
			1920×1080/50P or 59.94P (default value)
			1920×1080/50i or 59.94i
		FF 5K 16:9	3840×2160/50P or 59.94P
			1920×1080/50P or 59.94P (default value)
			1920×1080/50i or 59.94i
		FFc 3.8K 16:9	3840×2160/50P or 59.94P[1)]
			1920×1080/50P or 59.94P (default value)
			1920×1080/50i or 59.94i
	XAVC S-I	4096×2160 (17:9)	4096×2160/50P or 59.94P
			1920×1080/50P or 59.94P (default value)
			1920×1080/50i or 59.94i
	XAVC HS-L 422 XAVC HS-L 420 XAVC S-L 422 XAVC S-L 420 XAVC S-I	3840×2160 (16:9)	3840×2160/50P or 59.94P
			1920×1080/50P or 59.94P (default value)
			1920×1080/50i or 59.94i
	XAVC S-L 422 XAVC S-L 420 XAVC S-I	1920×1080 (16:9)	1920×1080/50P or 59.94P (default value)
			1920×1080/50i or 59.94i
			720×576/50P or 720×480/59.94P

[Project] – [Rec Format]			[Monitoring] – [Output Format]
[Project Frame Rate]	[Codec]	[Video Format] / [Imager Mode]	[HDMI]
25/29.97Hz	X-OCN LT X-OCN C1 X-OCN C2	FF 5K 3:2	4096×2160/25P or 29.97P
			1920×1080/25P or 29.97P
			1920×1080/50i or 59.94i (default value)
		FF 5K 17:9	4096×2160/25P or 29.97P
			1920×1080/25P or 29.97P
			1920×1080/50i or 59.94i (default value)
		FF 5K 16:9	3840×2160/25P or 29.97P
			1920×1080/25P or 29.97P
			1920×1080/50i or 59.94i (default value)
		FFc 3.8K 16:9	3840×2160/25P or 29.97P[1)]
			1920×1080/25P or 29.97P
			1920×1080/50i or 59.94i (default value)
	XAVC S-I	4096×2160 (17:9)	4096×2160/25P or 29.97P
			1920×1080/25P or 29.97P
			1920×1080/50i or 59.94i (default value)
	XAVC S-L 422 XAVC S-L 420 XAVC S-I	3840×2160 (16:9)	3840×2160/25P or 29.97P
			1920×1080/25P or 29.97P
			1920×1080/50i or 59.94i (default value)
	XAVC S-L 422 XAVC S-L 420 XAVC S-I	1920×1080 (16:9)	1920×1080/25P or 29.97P
			1920×1080/50i or 59.94i (default value)

[Project] – [Rec Format]			[Monitoring] – [Output Format]
[Project Frame Rate]	[Codec]	[Video Format] / [Imager Mode]	[HDMI]
23.98Hz	X-OCN LT X-OCN C1 X-OCN C2	FF 5K 3:2	4096×2160/23.98P
			1920×1080/23.98P (default value)
		FF 5K 17:9	4096×2160/23.98P
			1920×1080/23.98P (default value)
		FF 5K 16:9	3840×2160/23.98P
			1920×1080/23.98P (default value)
		FFc 3.8K 16:9	3840×2160/23.98P[1)]
			1920×1080/23.98P (default value)
	XAVC S-I	4096×2160 (17:9)	4096×2160/23.98P
			1920×1080/23.98P (default value)
	XAVC HS-L 422 XAVC HS-L 420 XAVC S-L 422 XAVC S-L 420 XAVC S-I	3840×2160 (16:9)	3840×2160/23.98P
			1920×1080/23.98P (default value)
	XAVC S-L 422 XAVC S-L 420 XAVC S-I	1920×1080 (16:9)	1920×1080/23.98P (default value)
24Hz	X-OCN LT X-OCN C1 X-OCN C2	FF 5K 3:2	4096×2160/24P
			1920×1080/24P (default value)
		FF 5K 17:9	4096×2160/24P
			1920×1080/24P (default value)
		FF 5K 16:9	3840×2160/24P
			1920×1080/24P (default value)
		FFc 3.8K 16:9	3840×2160/24P[1)]
			1920×1080/24P (default value)
	XAVC S-I	4096×2160 (17:9)	4096×2160/24P
			1920×1080/24P (default value)

1) Cannot be selected when the shooting frame rate setting exceeds 120fps.

TP1002215372

5-076-802-11(2) Copyright 2026 Sony Corporation

Troubleshooting

If a problem occurs, check the following to help resolve the issue.

Power supply

Symptom	Cause	Solution
The unit does not power on.	The battery pack is fully discharged.	Replace the battery pack with a fully charged one.
The power supply cuts out while operating.	The battery pack is discharged.	Replace the battery pack with a fully charged one.
The battery pack becomes discharged very quickly.	The ambient temperature is very low.	This is due to the battery characteristics and is not a defect.
	The battery pack is inadequately charged.	Recharge the battery pack. If the battery pack is quickly discharged even after you charged it fully, it may be close to the end of its life. Replace it with a new one.

Recording/playback

Symptom	Cause	Solution
Recording does not start when you press the record START/STOP button.	The memory card is full.	Replace the memory card with one having sufficient space.
Audio recording is not possible.	[CH1 Input Select] to [CH4 Input Select] are not set appropriately when [Audio Rec Format] is set to [48kHz/32bit float] / [96kHz/24bit] / [96kHz/32bit float].	Connect a Multi Interface Shoe compatible audio accessory that supports the audio recording format, such as the XLR handle unit, and set [CH1 Input Select] to [CH4 Input Select] individually to [Shoe CH1] to [Shoe CH4].
Clips cannot be played back.	The clip is being edited.	Clips may not be playable if you have modified file names or folders, or edited the clip on a computer. This is not a malfunction.
	The clip is being recorded on another device.	Clips recorded on other devices may not be played back, or displayed in incorrect size. This is not a malfunction.

External devices

Symptom	Solution
The computer does not recognize the unit.	Set [USB Tethering], [USB Timecode], and [USB Remote] to [Off] and then reconnect the unit to the computer.
	Disconnect the USB cable from the computer, then connect it again securely.
	Disconnect the USB cable from your computer, reboot your computer, and connect the computer and unit again using the correct procedure.
	Disconnect the USB cable from the unit, then connect it again securely.
Clips cannot be loaded on the computer.	Disconnect the USB cable from the computer, turn on the unit, and then connect it again.
	Application software must be installed to load clips on your computer.

Wireless LAN

Note

- Obstructions and electromagnetic interference between the unit and wireless LAN router or mobile device, or the ambient environment (such as wall materials) could shorten the communication range or prevent connections altogether. If you experience these problems, check the connection/communication status after moving the unit to a new location so that the unit and wireless router/mobile device are closer together.

Symptom	Solution
A mobile device cannot access the unit.	• Check the wireless LAN router connection (IP address, etc.). • The communication setting between the access point clients may be invalid. For details, refer to the operation manual for the wireless LAN router.
You cannot log in to the unit.	Check the user name and password that you set.

For details, see “Connecting with “Monitor & Control”” and “Connecting to the Internet via Wireless LAN.”

Internet connection

Symptom	Solution
File transfer fails.	The user name and password of the server may not be correct. Input the correct user name and password.
File transfer is not available.	Signal condition may be poor. Move to another location and try again.

For details, see “Connecting to the Internet via Wireless LAN,” “Connecting to the Internet via USB Tethering,” and “Connecting to the Internet via Wired LAN.”

Related Topic

- Connecting with “Monitor & Control”
- Connecting to the Internet via Wireless LAN
- Connecting to the Internet via USB Tethering
- Connecting to the Internet via Wired LAN

TP1002215373

5-076-802-11(2) Copyright 2026 Sony Corporation

Interchangeable Lens Digital Camera
ILME-FX5/ILME-FX5B

Error/Warning Messages

If a warning/caution/operation that requires confirmation occurs on the unit, a message is displayed on the LCD monitor screen, the recording/tally lamp starts flashing, and a warning sound is emitted.
The warning sound is emitted from the headphones connected to the headphone connector.

Error messages

The unit will stop operation when the following kind of display occurs.

Error message	Warning sound	Recording/tally lamp	Cause and Solution
E + error code	Continuous	Flashing rapidly	Indicates an abnormality in the unit. Recording stops, even if [● Rec] is displayed on the screen. Turn off the unit, and check for any problem with connected devices, cables, or memory cards. If the error persists when the unit is turned on again, contact your Sony service representative. If the unit does not turn off when the power switch is set to ⏻ (off), remove the battery pack or disconnect the AC adaptor. An error display or warning sound may not occur depending on the status of the unit.

Warning messages

Follow the instructions provided if the following display occurs.

Warning message	Warning sound	Recording/tally lamp	Cause and Solution
[Temperature High]	Intermittent	Flashing	The internal temperature is high. Turn off the unit and allow it to cool down before operating it again.
[Media Temperature High]	Intermittent	Flashing	The temperature of the CFexpress card is high. Replace the memory card or allow it to cool down before using it again.
[Media Near Full]	Intermittent	Flashing	The remaining capacity on the memory card is getting low. Replace at the earliest convenience.
[Media Full]	Continuous	Flashing rapidly	Clips could not be recorded or copied because there is no remaining capacity on the memory card. Replace immediately.
[Clips Near Full]	Intermittent	Flashing	The number of additional clips that can be recorded on a memory card is getting low. Replace at the earliest convenience.
[Clips Full]	Continuous	Flashing rapidly	The maximum number of clips that can be recorded on the memory card has been reached. Recording or copying more clips is not possible. Replace immediately.
[Last Clip Recording]	Intermittent	Flashing	The clip currently recording is the last clip that can be recorded, as the maximum number of clips has been reached. Prepare a new memory card.

Warning message	Warning sound	Recording/tally lamp	Cause and Solution
[Media(A) Life Near End][1)]	Intermittent	Flashing	The memory card is approaching the end of its life. Replace at the earliest convenience.
[Media(A) Life End][1)]	Continuous	Flashing rapidly	The memory card has reached the end of its life. Replace immediately.
[Media(A) Near Full][1)]	Intermittent	Flashing	When using the simultaneous recording function
[Media(A) Full][1)]	Continuous	Flashing rapidly	When using the simultaneous recording function
[Media(A) Clips Near Full][1)]	Intermittent	Flashing	When using the simultaneous recording function
[Media(A) Clips Full][1)]	Continuous	Flashing rapidly	When using the simultaneous recording function
[Media(A) Last Clip Rec][1)]	Intermittent	Flashing	When using the simultaneous recording function
[Transfer Jobs Near Full]	–	–	The number of FTP file transfer jobs that can be registered is getting low.
[Transfer Jobs Full]	–	–	The number of FTP file transfer jobs that can be registered has reached the upper limit. To add another job, first delete any unwanted jobs. [2)]

1) "(B)" is displayed for the memory card in card slot B.
2) You can select and delete jobs using [Network] – [File Transfer] – [View Job List] in the full menu. You can also delete jobs from the "Monitor & Control" job list.

Caution/Operation messages

The following caution and operation messages may appear in the center of the screen. Follow the instructions provided to resolve the issue.

Display message	Cause and Solution
[Battery Error Please Change Battery]	An error was detected in the battery pack. Replace with a normal battery pack.
[Battery empty. The power will be turned off.]	The remaining capacity of the battery pack is zero. Replace or recharge the battery pack.
[Battery Temperature High Power Will Turn Off]	The temperature of the battery pack has increased. Replace the battery pack or allow it to cool down before using it again.
[Unknown Media(A) Please Change][1)]	A memory card that has been partitioned or a memory card containing more clips that can be handled by the unit was inserted. The card cannot be used in the unit, and must be replaced.
[Cannot Use Media(A) Unsupported File System] [1)]	A memory card using a different file system or an unformatted memory card was inserted. The card cannot be used in the unit, and must be replaced or formatted using the unit.
[Media Error Media(A) Needs to be Restored][1)]	An error occurred on the memory card, and the card must be restored. Restore the memory card.

Display message	Cause and Solution
[Media(A) Error Recording Halted][1)] [Media Error] [Playback Halted]	Recording and playback was stopped because an error occurred while using the memory card. If the problem persists, replace the memory card.
[The specified address is invalid.]	The specified address is invalid. Check that the setting is correct.
[Cannot Use Specified Port Number]	The specified port number is invalid. Check that the setting is correct.
[Fan Stopped]	The built-in fan stopped. Avoid use at high temperatures, disconnect the power, and contact your Sony service representative.
[Addition of auto upload job failed.]	The maximum number of transfer jobs has been reached. Clear any unwanted jobs. The auto transfer destination setting for original files or proxy files may also be incorrect. Check that the setting is correct.
[Not found.]	Network (access point) with the specified SSID could not be found. Check that the setting is correct.
[Authentication Failed]	Connection authentication on the network (access point) with the specified SSID failed. Check that the password and other settings are correct.
[An IP address conflict has occurred. Please check the network settings.]	There is a conflict in the network addresses of the wireless LAN or wired LAN and USB tethering. Change the address manually or change the settings for the network router.
[The IP address of the Wireless LAN Access Point Mode has been changed due to an IP address conflict.]	The IP address in wireless LAN access point mode was changed due to a conflict in the network addresses of the wireless LAN access point mode or wired LAN and USB tethering. Check the new IP address setting.

1) “(B)” is displayed for the memory card in card slot B.

TP1002215374

5-076-802-11(2) Copyright 2026 Sony Corporation

Items Saved in Files

The following table shows the full menu items saved to an All file/scene file.
✓: Saved in file.
×: Not saved in file.
–: Not saved in file (temporary menu)

Level 1	Level 2	Level 3	[All File]	[Scene File]
[Shooting]	[ISO/Gain]	[Mode]	✓	×
		[ISO/Gain Select]	✓	×
		[Shockless Gain]	✓	×
		[Base Sensitivity]	✓	×
		[Base ISO]	✓	×
	[Exposure Index]	[EI Select]	✓	×
	[Shutter]	[Mode]	✓	×
		[Step/Continuous Select]	✓	×
		[Angle (Step)]	✓	×
		[Angle (Continuous)]	✓	×
		[Shutter Speed On/Off]	✓	×
		[Speed (Step)]	✓	×
		[Speed (Continuous)]	✓	×
	[Auto Exposure]	[Level]	✓	×
		[Mode]	✓	×
		[Speed]	✓	×
		[AGC]	✓	×
		[AGC Limit]	✓	×
		[AGC Point]	✓	×
		[Auto Shutter]	✓	×
		[A.SHT Limit]	✓	×
		[A.SHT Point]	✓	×
		[Clip High light]	✓	×
		[Detect Window]	✓	×
		[Detect Window Indication]	✓	×
		[Custom Width]	✓	×
		[Custom Height]	✓	×
		[Custom H Position]	✓	×
		[Custom V Position]	✓	×

Level 1	Level 2	Level 3	[All File]	[Scene File]
	[White Balance]	[White Select]	✓	×
		[Auto White Balance]	–	–
		[ATW]	✓	×
		[Color Temp. Select]	✓	×
		[Tint]	✓	×
		[R Gain]	✓	×
		[B Gain]	✓	×
		[Set to Preset Value]	–	–
	[White Balance Setting]	[Shockless White]	✓	×
		[ATW Speed]	✓	×
	[Focus]	[Focus Operation]	✓	×
		[AF Transition Speed]	✓	×
		[AF Subj. Shift Sens.]	✓	×
		[Focus Area]	✓	×
		[Subject Recognition AF]	✓	×
		[Recognition Target Select]	✓	×
		[Touch Function in MF]	✓	×
		[Multi Selector Function]	✓	×
		[Pointer Color]	✓	×
		[Pointer Border]	✓	×
		[AF Assist]	✓	×
		[Lens Action If Cannot AF]	✓	×
	[FPS]	[Fixed/Variable Select]	✓	×
		[FPS Select]	✓	×
	[LUT On/Off]	[1 HDMI]	✓	×
		[2 Proxy/Remote Live View]	✓	×
		[3 LCD Monitor/VF]	✓	×
	[Noise Suppression]	[Setting(Custom)]	✓	×
		[Level(Custom)]	✓	×
		[Setting (Cine EI/Flex. ISO)]	✓	×
		[Level (Cine EI/Flex. ISO)]	✓	×
	[Flicker Reduce]	[Mode]	✓	×
		[Frequency]	✓	×

Level 1	Level 2	Level 3	[All File]	[Scene File]
	[Image Stabilization]	[SteadyShot]	✓	×
		[Stabilization Adjustment]	✓	×
		[Focal Length]	✓	×

Level 1	Level 2	Level 3	[All File]	[Scene File]
[Project]	[Base Setting]	[Shooting Mode]	✓	–
		[Target Display]	✓	–
		[Cine EI/Flexible ISO Setting]		
		[Input Color Space]	✓	–
		[Embed LUT File]	✓	×
	[Rec Format]	[Project Frame Rate]	✓	×
		[Imager Mode]	✓	×
		[Internal Rec / RAW Out]	✓	×
		[Codec]	✓	×
		[Video Format]	✓	×
		[Quality]	✓	×
		[Bit Rate]	–	–
	[Anamo. De-Squeeze]	[Ratio]	✓	×
	[HDR Setting]	[LCD/VF SDR Preview]	✓	×
		[SDR Gain]	✓	×
	[Simul Rec]	[Setting]	✓	×
	[Proxy Rec]	[Setting]	✓	×
		[Proxy Format]	✓	×
		[Audio Channel]	✓	×
	[Interval Rec]	[Setting]	×	×
		[Interval Time]	✓	×
		[Number of Frames]	✓	×
	[HDMI Rec Trigger]	[Setting]	✓	×

Level 1	Level 2	Level 3	[All File]	[Scene File]
	[Assignable Button]	<1>	✓	×
		<2>	✓	×
		<3>	✓	×
		<4>	✓	×
		<5>	✓	×
		<6>	✓	×
		[<VF/LCD>]	✓	×
		[Focus Hold Button]	✓	×
		[Grab Button]	✓	×
		[Grab Button (Half Press)]	✓	×
		[<User 1>]	✓	×
		[<User 2>]	✓	×
		[<User 3>]	✓	×
		[<User 4>]	✓	×
		[<User 5>]	✓	×
		[<User 6>]	✓	×
	[Assignable Dial]	[Assignable Dial]	✓	×
		[Assignable Dial Direction]	✓	×
	[Multi Function Dial]	[Default Function]	✓	×
	[All File]	[Load from Media(B)]	–	–
		[Save to Media(B)]	–	–
		[File ID]	✓	×
		[Load Network Data]	×	×

Level 1	Level 2	Level 3	[All File]	[Scene File]
[Paint/Look]	[Scene File]	[Recall Internal Memory]	–	–
		[Store Internal Memory]	–	–
		[Delete]	–	–
		[Preset Recall]	–	–
		[Load from Media(B)]	–	–
		[Save to Media(B)]	–	–
		[File Name]	–	–
	[Base Look]	[Select]	✓	✓
		[Delete]	–	–
		[Delete All]	–	–
		[Import from Media(B)]	–	–
		[Input]	✓	✓
		[Output]	✓	✓
		[AE Level Offset]	✓	✓
	[Reset Paint Settings]	[Reset without Base Look]	–	–
	[Black]	[Master Black]	✓	✓
		[R Black]	✓	✓
		[B Black]	✓	✓
	[Black Gamma]	[Setting]	✓	✓
		[Range]	✓	✓
		[Master Black Gamma]	✓	✓
	[Knee]	[Setting]	✓	✓
		[Auto Knee]	✓	✓
		[Point]	✓	✓
		[Slope]	✓	✓
	[Detail]	[Setting]	✓	✓
		[Level]	✓	✓
		[Manual Setting]	✓	✓
		[H/V Ratio]	✓	✓
		[B/W Balance]	✓	✓
		[Limit]	✓	✓
		[Crispening]	✓	✓
		[High Light Detail]	✓	✓

Level 1	Level 2	Level 3	[All File]	[Scene File]
	[Matrix]	[User Matrix]	✓	✓
		[User Matrix Level]	✓	✓
		[User Matrix Phase]	✓	✓
		[User Matrix R-G]	✓	✓
		[User Matrix R-B]	✓	✓
		[User Matrix G-R]	✓	✓
		[User Matrix G-B]	✓	✓
		[User Matrix B-R]	✓	✓
		[User Matrix B-G]	✓	✓
	[Multi Matrix]	[Setting]	✓	✓
		[Area Indication]	×	×
		[Reset]	–	–
		[Axis]	×	×
		[Hue]	✓	✓
		[Saturation]	✓	✓

Level 1	Level 2	Level 3	[All File]	[Scene File]
[TC/Media]	[Timecode]	[Mode]	✓	×
		[Run]	✓	×
		[Manual Setting]	×	×
		[Reset]	–	–
		[TC Format]	✓	×
		[USB Timecode]	✓	×
	[TC Display]	[Time Data Display]	✓	×
	[Users Bit]	[Mode]	✓	×
		[Manual Setting]	×	×
	[HDMI TC Out]	[Setting]	✓	×
	[Clip Name Format]	[Auto Naming]	✓	×
		[Camera ID]	×	×
		[Reel Number]	×	×
		[Camera Position]	×	×
		[Clip Number]	✓	×
		[Series Counter Reset]	–	–
		[Title Name Settings]	✓	×
	[Update Media]	[Media(A)]	–	–
		[Media(B)]	–	–
	[Format Media]	[Media(A)]	–	–
		[Media(B)]	–	–

Level 1	Level 2	Level 3	[All File]	[Scene File]
[Monitoring]	[Output On/Off]	[HDMI]	✓	×
	[Output Format]	[HDMI]	✓	×
	[Output Display]	[HDMI]	✓	×

Level 1	Level 2	Level 3	[All File]	[Scene File]
	[Display On/Off]	[Camera ID]	✓	×
		[Frame Rate]	✓	×
		[Shutter]	✓	×
		[Iris]	✓	×
		[ISO/Gain/EI]	✓	×
		[Auto Exposure Mode]	✓	×
		[Auto Exposure Level]	✓	×
		[White Balance]	✓	×
		[Battery Remain]	✓	×
		[GPS]	✓	×
		[Imager Mode]	✓	×
		[Anamo. De-Squeeze]	✓	×
		[Base ISO/Sensitivity]	✓	×
		[Rec Format]	✓	×
		[Rec Look]	✓	×
		[Level Gauge]	✓	×
		[Zoom Position]	✓	×
		[Focus Mode]	✓	×
		[Focus Position]	✓	×
		[Focus Area Indicator]	✓	×
		[Subject Recognition Frame]	✓	×
		[Tracking AF Pointer]	✓	×
		[Focus Indicator]	✓	×
		[Lens Info]	✓	×
		[Video Level Warning]	✓	×
		[Gamma Display Assist]	✓	×
		[Video Signal Monitor]	✓	×
		[TC Status]	✓	×
		[Output Look]	✓	×
		[HDMI Rec Control]	✓	×
		[Network Status]	✓	×
		[File Transfer Status]	✓	×
		[Stream Status]	✓	×
		[Image Stabilization]	✓	×

Level 1	Level 2	Level 3	[All File]	[Scene File]
		[UWP RF Level]	✓	×
		[Audio Level Meter]	✓	×
		[Timecode]	✓	×
		[Look Name]	✓	×
		[Rec/Play Status]	✓	×
		[Rec Status Frame]	✓	×
		[Tally]	✓	×
		[Clip Name]	✓	×
		[Media Status]	✓	×
		[Clip Number]	✓	×
		[Notice Message]	✓	×
	[Frame Line]	[Setting]	✓	×
		[Color]	✓	×
		[Center Marker]	✓	×
		[Safety Zone]	✓	×
		[Safety Area]	✓	×
		[Aspect Marker]	✓	×
		[Aspect Mask]	✓	×
		[Aspect Safety Zone]	✓	×
		[Aspect Safety Area]	✓	×
		[Aspect Select]	✓	×
		[Custom Aspect Ratio]	✓	×
		[Guide Frame]	✓	×
		[100% Marker]	✓	×
		[User Box]	✓	×
		[User Box Width]	✓	×
		[User Box Height]	✓	×
		[User Box H Position]	✓	×
		[User Box V Position]	✓	×
	[LCD Monitor Setting]	[LCD Monitor Brightness]	✓	×
		[LCD Monitor Color Mode]	✓	×
		[VF Brightness]	✓	×
		[LCD Monitor H/V Flip]	✓	×

Level 1	Level 2	Level 3	[All File]	[Scene File]
	[VF Setting]	[LCD Monitor/VF Select]	✓	×
		[VF Brightness]	✓	×
		[VF Color Mode]	✓	×
		[VF Magnification]	✓	×
		[VF Image in HDR]	✓	×
	[Gamma Display Assist]	[Setting]	✓	×
	[Focus Map]	[Setting]	✓	×
	[Peaking]	[Setting]	✓	×
		[Peaking Level]	✓	×
		[Color]	✓	×
	[Zebra]	[Setting]	✓	×
		[Zebra1 Level]	✓	×
		[Zebra1 Aperture Level]	✓	×
		[Zebra2 Level]	✓	×
	[Focus Magnifier]	[Focus Mag Button Target]	✓	×

Level 1	Level 2	Level 3	[All File]	[Scene File]
[Audio]	[Audio Rec Format]	[Audio Rec Format]	✓	–
	[32bit float WAV Rec]	[Setting]	✓	–

Level 1	Level 2	Level 3	[All File]	[Scene File]
	[Audio Input]	[CH1 Input Select]	✓	×
		[CH2 Input Select]	✓	×
		[CH3 Input Select]	✓	×
		[CH4 Input Select]	✓	×
		[Reference Level]	✓	×
		[CH1 Filter]		
		[Wind Filter]	✓	×
		[Noise Cut Filter]	✓	×
		[Zoom Noise Cut(INT MIC)]	✓	×
		[CH2 Filter]		
		[Wind Filter]	✓	×
		[Noise Cut Filter]	✓	×
		[Zoom Noise Cut(INT MIC)]	✓	×
		[CH3 Filter]		
		[Wind Filter]	✓	×
		[Noise Cut Filter]	✓	×
		[Zoom Noise Cut(INT MIC)]	✓	×
		[CH4 Filter]		
		[Wind Filter]	✓	×
		[Noise Cut Filter]	✓	×
		[Zoom Noise Cut(INT MIC)]	✓	×
		[CH1 Level Control]	✓	×
		[CH2 Level Control]	✓	×
		[CH3 Level Control]	✓	×
		[CH4 Level Control]	✓	×
		[CH1 Input Level]	✓	×
		[CH2 Input Level]	✓	×
		[CH3 Input Level]	✓	×
		[CH4 Input Level]	✓	×
		[Audio Input Level]	✓	×
		[Limiter Mode]	✓	×
		[CH1&2 AGC Mode]	✓	×
		[CH3&4 AGC Mode]	✓	×
		[AGC Spec]	✓	×

Level 1	Level 2	Level 3	[All File]	[Scene File]
		[1kHz Tone on Color Bars]	✓	×
		[CH1 Level]	✓	×
		[CH2 Level]	✓	×
		[CH3 Level]	✓	×
		[CH4 Level]	✓	×
	[Audio Output]	[Monitor CH]	✓	×
		[Volume]	×	×
		[Headphone Live/Processed]	✓	×
		[Headphone Mono/ST]	✓	×
		[Alarm Level]	✓	×
		[HDMI Out CH]	✓	×
[Clip Operations]	[Display Clip Properties]		–	–
	[Set Clip Flag]	[Add OK]	–	–
		[Add NG]	–	–
		[Add KEEP]	–	–
		[Delete Clip Flag]	–	–
	[Lock/Unlock Clip]	[Select Clip]	–	–
		[Lock All Clips]	–	–
		[Unlock All Clips]	–	–
	[Delete Clip]	[Select Clip]	–	–
		[All Clips]	–	–
	[Transfer Clip]	[Select Clip]	–	–
		[All Clips]	–	–
	[Transfer Clip (Proxy)]	[Select Clip]	–	–
		[All Clips]	–	–
	[Filter Clips]	[OK]	–	–
		[NG]	–	–
		[KEEP]	–	–
		[None]	–	–
		[All]	–	–
	[Customize View]	[Clips Caption]	✓	–

Level 1	Level 2	Level 3	[All File]	[Scene File]
[Technical]	[Exposure Assist]	[False Color]	✓	×
		[Output Target]	✓	×
		[Color Scale]	✓	×
	[Test Signals]	[Color Bars]	✓	×
		[Color Bar Type]	✓	×
	[Alerts & Tally]	[Front Tally Lamp]	✓	×
		[Rear Tally Lamp]	✓	×
		[Tally Control]	✓	×
		[Rec Start/Stop Beep]	✓	×
	[Key Lock]	[Setting]	✓	×
		[with Rec Button]	✓	×
	[Touch Operation]	[Setting]	✓	×
	[Rec Review]	[Setting]	✓	×
	[Zoom]	[Zoom Type]	✓	×
		[Clear Image Zoom Type]	✓	×
	[Zoom Lever Speed]	[1st Zoom (Standby)]	✓	×
		[2nd Zoom(Standby)]	✓	×
		[1st Zoom (Rec)]	✓	×
		[2nd Zoom(Rec)]	✓	×
	[Bluetooth Zoom]	[Zoom Speed Type]	✓	×
		[Fixed Speed (Standby)]	✓	×
		[Fixed Speed (Rec)]	✓	×
	[GPS]	[Location by Mobile App]	✓	×
	[Menu Settings]	[Info. Disp. Mode Operation]	✓	×
	[USB]	[USB Cnct Mode (PORT1)]	✓	×
		[USB Cnct Mode (PORT2)]	✓	×
	[Fan Control]	[Setting]	✓	×
	[Lens]	[Zoom Ring Direction]	✓	×
		[Shading Compensation]	✓	×
		[Chroma Aberration Comp.]	✓	×
		[Distortion Comp.]	✓	×
		[Breathing Compensation]	✓	×
		[Focus Distance Format]	✓	×
	[Auto Pixel Restore]	[Auto Pixel Restoration]	–	–

Level 1	Level 2	Level 3	[All File]	[Scene File]
	[Sensor Cleaning]	[Sensor Cleaning]	–	–
	[Power Settings]	[Power Save]	✓	×
		[Auto Power Off Temp.]	✓	×
		[USB Power Supply]	✓	×

Level 1	Level 2	Level 3	[All File]	[Scene File]
[Network]	[Network Setup]	[Setup for Mobile App]	–	–
		[LAN Type Select]	✓	×
		[Show Authentication]	–	–
		[Edit Authentication]		
		[User Name]	×	×
		[Input Password]	×	×
		[Generate Password]	×	×
	[Wireless LAN]	[Setting]	✓	×
		[Channel]	–	–
		[Camera SSID & Password]	–	–
		[Regenerate Password]	–	–
		[Camera Remote Control]	–	–
		[Connected Network]	–	–
		[Scan Networks]	–	–
		[WPS]	–	–
		[Manual Register]		
		[SSID]	–	–
		[Security]	–	–
		[Password]	–	–
		[DHCP]	–	–
		[IP Address]	–	–
		[Subnet Mask]	–	–
		[Gateway]	–	–
		[DNS Auto]	–	–
		[Primary DNS Server]	–	–
		[Secondary DNS Server]	–	–
		[IP Address]	–	–
		[Subnet Mask]	–	–
		[MAC Address]	–	–

Level 1	Level 2	Level 3	[All File]	[Scene File]
	[Wired LAN]	[Setting]	✓	×
		[Camera Remote Control]	✓	×
		[Detail Settings]		
		[DHCP]	✓	×
		[IP Address]	✓	×
		[Subnet Mask]	✓	×
		[Gateway]	✓	×
		[DNS Auto]	✓	×
		[Primary DNS Server]	✓	×
		[Secondary DNS Server]	✓	×
		[IP Address]	–	–
		[Subnet Mask]	–	–
		[MAC Address]	–	–
	[USB Tethering]	[Setting]	✓	×
		[Camera Remote Control]	✓	×
		[IP Address]	–	–
		[Subnet Mask]	–	–
	[Bluetooth]	[Setting]	✓	×
		[Pairing]	–	–
		[Manage Paired Device]	×	×
		[Device Address]	–	–

Level 1	Level 2	Level 3	[All File]	[Scene File]
	[File Transfer]	[Auto Upload]	✓	×
		[Auto Upload (Proxy)]	✓	×
		[Default Upload Server]	✓	×
		[Clear Completed Jobs]	–	–
		[Clear All Jobs]	–	–
		[View Job List]	–	–
		[Server Settings1] / [Server Settings2] / [Server Settings3]		
		[Display Name]	✓	×
		[Service]	✓	×
		[Host Name]	✓	×
		[Port]	✓	×
		[User Name]	×	×
		[Password]	×	×
		[Passive Mode]	✓	×
		[Destination Directory]	✓	×
		[Using Secure Protocol]	✓	×
		[Root Certificate]	–	–
		[Root Certificate Status]	–	–
		[Reset]	–	–

Level 1	Level 2	Level 3	[All File]	[Scene File]
	[Stream]	[Setting]	×	×
		[Destination Select]	✓	×
		[RTMP/RTMPS 1] / [RTMP/RTMPS 2] / [RTMP/RTMPS 3]		
		[Display Name]	✓	×
		[Codec]	–	–
		[Resolution]	✓	×
		[Bit Rate]	✓	×
		[Destination URL]	×	×
		[Stream Key]	×	×
		[RTMPS Certificate]	–	–
		[RTMPS Certificate Status]	–	–
		[Reset]	–	–
		[RTMPS Default Certificates]		
		[Replace]	–	–
		[Reset]	–	–
		[Status]	–	–
		[SRT-Caller 1] / [SRT-Caller 2 Codec] / [SRT-Caller 3]		
		[Display Name]	✓	×
		[Codec]	✓	×
		[Resolution]	✓	×
		[Bit Rate]	✓	×
		[Destination URL]	×	×
		[Port]	✓	×
		[Latency]	✓	×
		[TTL]	✓	×
		[Encryption]	×	×
		[Passphrase]	×	×
		[ARC]	✓	×
		[Reset]	–	–
	[Network Reset]	[Reset]	–	–

Level 1	Level 2	Level 3	[All File]	[Scene File]
[Maintenance]	[Language]	[Select]	✓	×
	[Accessibility]	[Screen Reader]		
		[Setting]	✓	×
		[Speed]	✓	×
		[Volume]	✓	×
		[Read Out when Power On]	✓	×
		[Enlarge Screen]		
		[Setting]	✓	×
		[Magnification]	✓	×
		[Enlarge Screen Button]	✓	×
	[Clock Set]	[Time Zone]	✓	×
		[Date Mode]	✓	×
		[12h/24h]	✓	×
		[Date]	×	×
		[Time]	×	×
		[Auto Date/Time Correction]	✓	×
		[Auto Time Zone Correction]	✓	×
	[All Reset]	[Reset]	–	–
		[Reset without Network]	–	–
		[Reset to Factory Defaults]	–	–
	[Hours Meter]	[Hours(System)]	–	–
		[Hours(Resettable)]	–	–
		[Reset]	–	–
	[Firmware]	[Version Number]	–	–
		[Firmware Update]	–	–
		[Lens Version]	–	–

TP1002215375

5-076-802-11(2) Copyright 2026 Sony Corporation

Interchangeable Lens Digital Camera
ILME-FX5/ILME-FX5B

Block Diagrams

The block diagrams are related to audio and the [Audio] menu.

[Audio Input] (CH1&CH2)

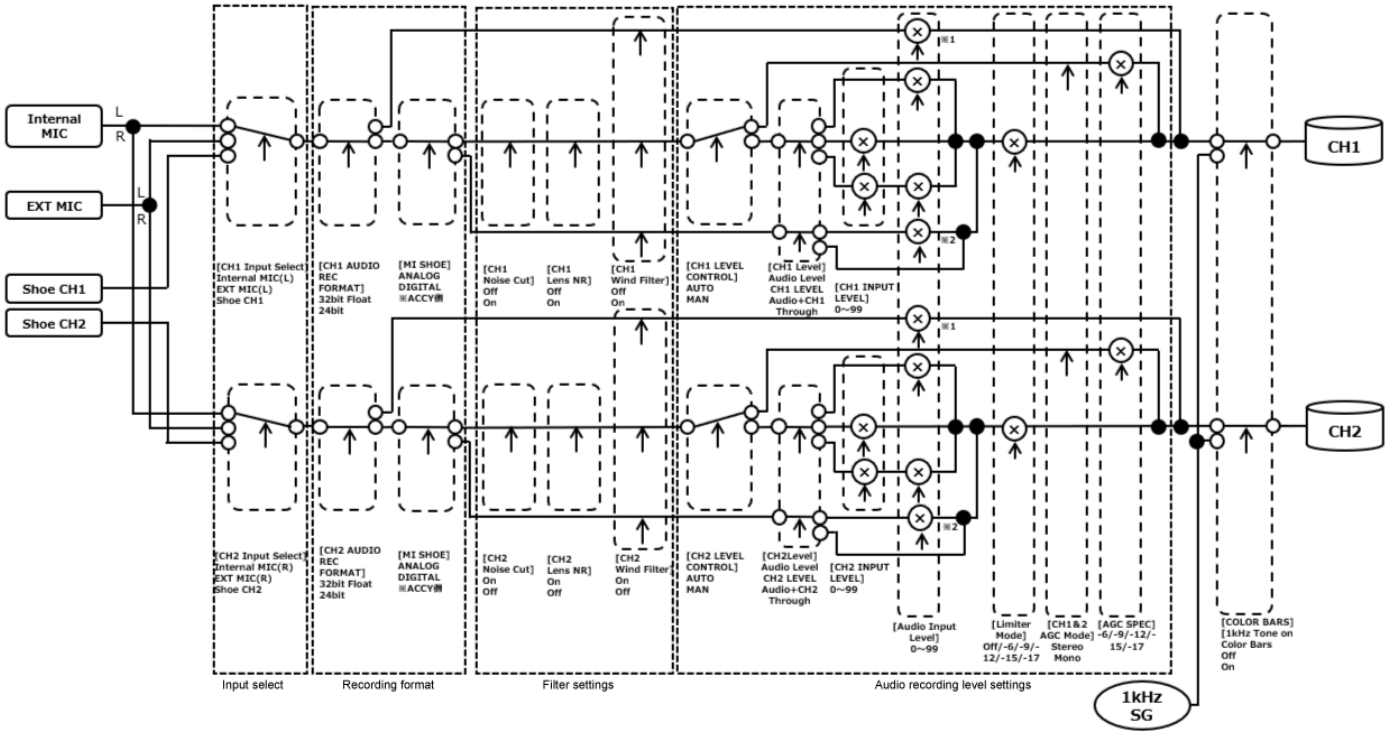

*1: Disabled when XLR adaptor is set to AUTO
*2: Disabled when XLR-H2 and XLR-A4 are set to AUTO
* Set using [Audio] – [Audio Input] – [CH1 Level Control] to [CH2 Level Control] in the menu for audio input from an XLR adaptor.

[Audio Input] (CH3&CH4)

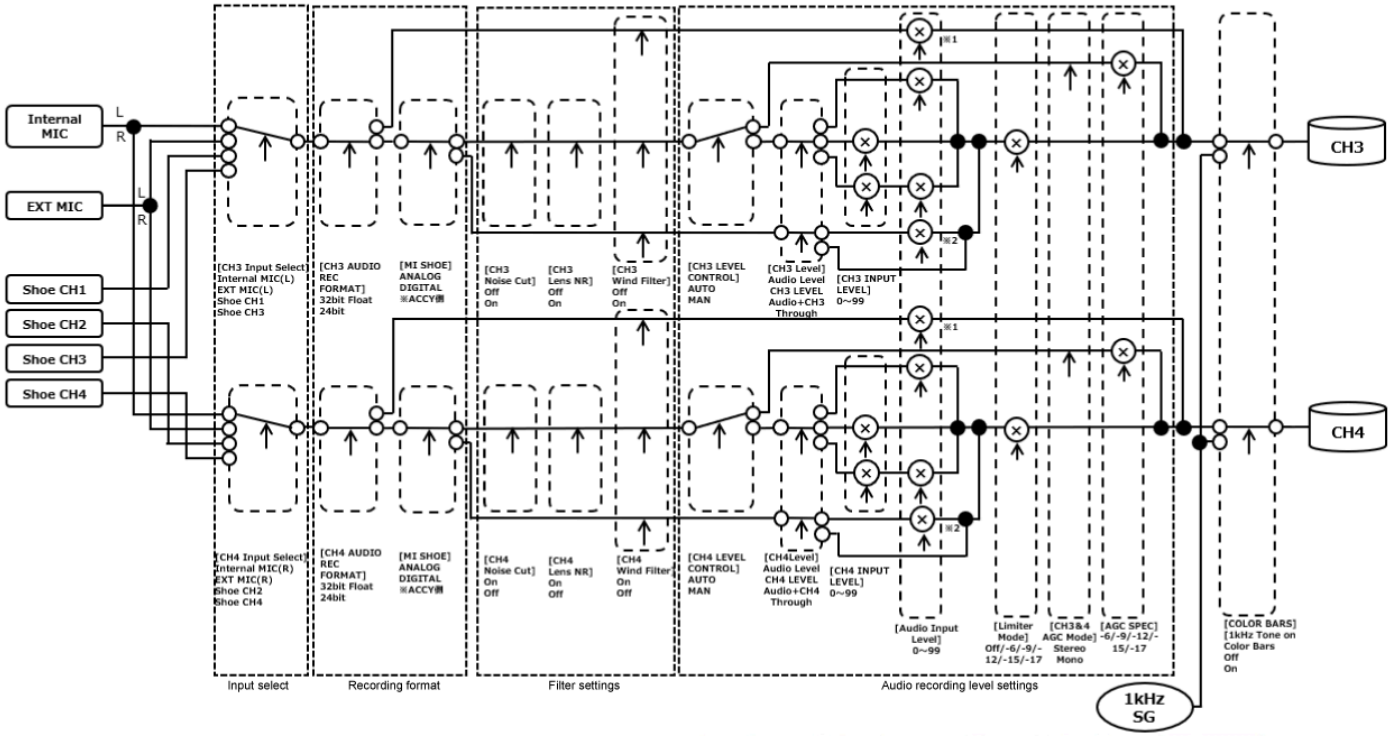

*1: Disabled when XLR adaptor is set to AUTO

*2: Disabled when XLR-H2 and XLR-A4 are set to AUTO

* Set using [Audio] – [Audio Input] – [CH1 Level Control] to [CH3 Level Control] in the menu for audio input from an XLR adaptor.

Block diagram (output example)

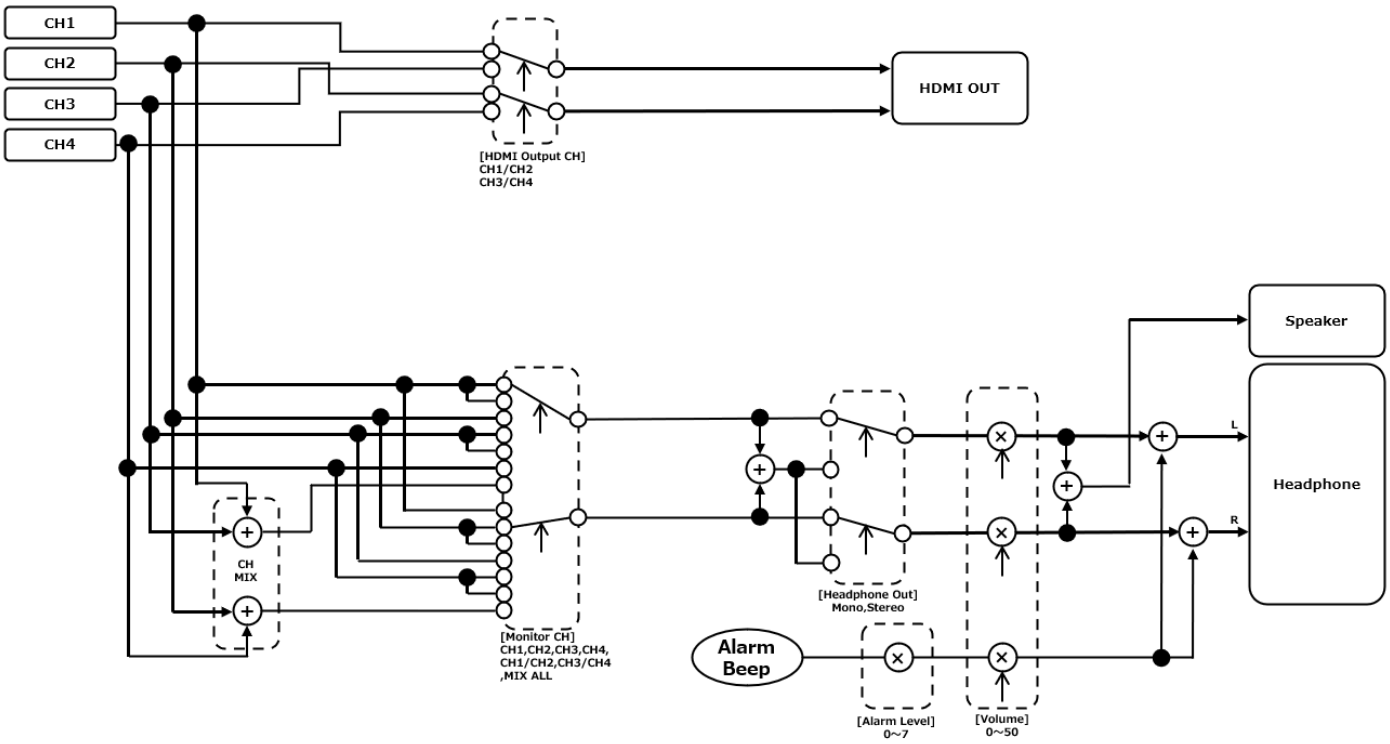

TP1002215376

5-076-802-11(2) Copyright 2026 Sony Corporation

Updating E-Mount Lens Software

You can update the software for an E-mount lens from the unit.
For details about lenses that can be updated and the corresponding software, refer to the website for the lens.

Checking the version

1. **Attach the E-mount lens to the unit.**

Note

- Attach the lens while the unit is turned off.

2. **Select [Maintenance] – [Firmware] in the full menu.**
   The version number of the E-mount lens and lens adaptor is displayed.

Updating the software

Set the unit to mass storage mode.
Update the software according to the instructions included with the lens software.

Note

- The update cannot be performed unless the battery remaining capacity is 51% or higher. Use a sufficiently charged battery pack.

Related Topic

- Managing/Editing Clips using a Computer

TP1002326228

5-076-802-11(2) Copyright 2026 Sony Corporation

Licenses

MPEG-4 AVC Patent Portfolio License

THIS PRODUCT IS LICENSED UNDER THE AVC PATENT PORTFOLIO LICENSE FOR THE PERSONAL USE OF A CONSUMER OR OTHER USES IN WHICH IT DOES NOT RECEIVE REMUNERATION TO
(i) ENCODE VIDEO IN COMPLIANCE WITH THE AVC STANDARD (“AVC VIDEO”) AND/OR
(ii) DECODE AVC VIDEO THAT WAS ENCODED BY A CONSUMER ENGAGED IN A PERSONAL ACTIVITY AND/OR WAS OBTAINED FROM A VIDEO PROVIDER LICENSED TO PROVIDE AVC VIDEO.
NO LICENSE IS GRANTED OR SHALL BE IMPLIED FOR ANY OTHER USE. ADDITIONAL INFORMATION MAY BE OBTAINED FROM MPEG LA, L.L.C. SEE HTTP://WWW.MPEGLA.COM

Obtaining Software Under the GPL/LGPL License

This product uses software to which the GPL/LGPL applies. This informs you that you have a right to have access to, modify, and redistribute source code for these software programs under the conditions of the GPL/LGPL.
The source code is provided on the internet. Use the following URL and follow the download instructions.
https://oss.sony.net/Products/Linux/
We would prefer that you do not contact us about the contents of the source code.
Licenses (in English) are recorded in the internal memory of your product.
Establish a mass storage connection between the product and a computer to read licenses in the “PMHOME” - “LICENSE” folder.

END USER LICENSE AGREEMENT

By starting to use this product, you are deemed to have agreed to the terms of the software license agreement. The software license agreement between the customer and Sony is available on our website (https://rd1.sony.net/help/di/el23/h_zz/).

Open Source Software Licenses

On the basis of license contracts between Sony and the software copyright holders, this product uses open source software.
To meet the requirements of the software copyright holders, Sony is obligated to inform you of the content of these licenses.
Licenses (in English) are recorded in the internal memory of your product.
Establish a mass storage connection between the product and a computer to read licenses in the “PMHOME” - “LICENSE” folder.

About the Apple iAP2 license

This product contains software that is used under license agreement with Apple Inc.
To meet the requirements of the software copyright holders, Sony is obligated to inform you of the content of these licenses.
Licenses (in English) are recorded in the internal memory of your product.
Establish a mass storage connection between the product and a computer to read licenses in the “PMHOME” - “LICENSE” folder.

TP1002215377

5-076-802-11(2) Copyright 2026 Sony Corporation

Interchangeable Lens Digital Camera
ILME-FX5/ILME-FX5B

Specifications

Unit

[Type]

Camera type
Interchangeable lens digital camera
Lens
Sony E-mount lens

[Imager]

Imaging element
35 mm full-frame (35.9 mm × 24.0 mm), CMOS image sensor
Number of pixels (effective)
Approx. 16 600 000 pixels
Number of pixels (total)
Approx. 18 200 000 pixels

Latitude

15+ stops (S-Log3)

Color temperature range

2000 K to 15000 K

[Image stabilization]

Type
Image sensor shift type (internal)

[Anti-Dust function]

System
Anti-dust function using antistatic coating and ultrasonic vibration

[Auto focus]

Detection method
Phase detection/contrast detection

[Monitor]

LCD monitor
8.8 cm (3.5 inch) TFT, touch panel
Number of dots
2 764 800 dots

[Recording media]

CFexpress Type A memory cards, SD cards

[Slots]

Slot A / Slot B
CFexpress Type A memory card, SD (UHS-I, UHS-II compliant) card slots

[Input/output connectors]

USB Type-C connector (USB PORT 1)

USB communication SuperSpeed USB 10 Gbps (USB 3.2)
USB Power Delivery compatible
USB Type-C connector (USB PORT 2)
USB communication Hi-Speed USB 480 Mbps (USB 2.0)
USB Power Delivery compatible
HDMI connector
HDMI type A connector
LAN connector
2.5GBASE-T, 1000BASE-T, 100BASE-TX
Microphone connector
Ø3.5 mm stereo mini jack
Headphone connector
Ø3.5 mm stereo mini jack

[Power supply, Other]

Rated input
7.82 V ⎓
Power consumption
When using FE 28-70mm F3.5-5.6 OSS II lens
Approx. 7.4 W
Operating temperature
0 °C to 40 °C (32 °F to 104 °F)
Storage temperature
−20 °C to +55 °C (−4 °F to +131 °F)
Dimensions (width × height × depth) (Approx.)
132.2 mm × 79.0 mm × 87.0 mm
5 $^{1}/_{4}$ in. × 3 $^{1}/_{8}$ in. × 3 $^{1}/_{2}$ in.
Mass (Approx.)
734 g (1 lb 9.9 oz) (including battery pack, SD card)
Microphone
Stereo
Speaker
Monaural

[Energy saving]

Power consumption (off mode)
Not supported
Power consumption (standby mode/low-voltage mode)
0.5 W
Power consumption (network standby mode)
2.0 W (Bluetooth) / 2.0 W (LAN) / 2.0 W (all connectors connected and network connected)
Energy saving mode enable
Within 20 minutes (default)
Network standby mode enable
Within 20 minutes (default)

[Wireless LAN]

WW789166 (see nameplate on bottom of camera)
Supported standards: IEEE 802.11 a/b/g/n/ac/ax
Frequency band: 2.4 GHz / 5 GHz / 6 GHz
WW679476 (see nameplate on bottom of camera)
Supported standards: IEEE 802.11 a/b/g/n/ac/ax
Frequency band: 2.4 GHz / 5 GHz
WW199569 (see nameplate on bottom of camera)
Supported standards: IEEE 802.11 b/g/n/ax
Frequency band: 2.4 GHz
Security
WPA2-PSK (AES) / WPA3-SAE
Connection method
Wi-Fi Protected Setup™ (WPS)/Manual
Access method

Infrastructure mode

[Bluetooth communication]

Bluetooth compliant standard Ver. 5.3
Frequency band
2.4 GHz

XLR-H2 XLR Handle Unit (ILME-FX5 only)

INPUT1/INPUT2 connectors (XLR/TRS[*1] type, 3-pin, female, +48 V phantom power supply compatible)
MIC
Reference input level: −50 dBu (ATT = 10)
Reference recording level: −20 dBFS
LINE
Reference input level: +4 dBu
Reference recording level: −20 dBFS

INPUT3 connector (stereo mini jack, plug-in power compatible)
Reference input level: −66 dBu (ATT = 10)
Reference recording level: −20 dBFS
(0 dBu = 0.775 Vrms)
Mass (Approx.)
312 g (11.1 oz)

*1 3-pole jack (Tip: Hot, Ring: Cold, Sleeve: GND)

BC-SAD1 battery charger

Rated input
15 V ⎓, 3 A
Rated output
8.9 V ⎓, 2.7 A × 1
8.9 V ⎓, 1.9 A × 2

NP-SA100 rechargeable battery pack

Rating
7.82 V ⎓

Recommended USB PD compatible AC adaptor

Input
100 V to 240 V ∿, 50/60 Hz
Output
9 V ⎓ / 3 A or higher

Design and specifications are subject to change without notice.

Trademarks and licenses

- “α” and “α” are trademarks of Sony Group Corporation.
- XAVC S and XAVC S are trademarks of Sony Group Corporation.
- XAVC HS and XAVC HS are trademarks of Sony Group Corporation.
- Mac is a trademark of Apple Inc., registered in the U.S. and other countries and regions.
- AOSS is a trademark of Buffalo, Inc.
- USB Type-C® and USB-C® are registered trademarks of USB Implementers Forum.
- The terms HDMI™, HDMI High-Definition Multimedia Interface, HDMI Trade dress and the HDMI Logos are trademarks or registered trademarks of HDMI Licensing Administrator, Inc.
- Microsoft and Windows are trademarks or registered trademarks of Microsoft Corporation in the United States and/or other countries.
- The SDXC logo is a trademark of SD-3C, LLC.
- CFexpress™ is a trademark owned solely and exclusively by the CompactFlash Association.
- Wi-Fi, Wi-Fi logo, and Wi-Fi Protected Setup are trademarks or registered trademarks of Wi-Fi Alliance.

- The Bluetooth® word mark and logos are registered trademarks owned by Bluetooth SIG, Inc. and any use of such marks by Sony Group Corporation and its subsidiaries is under license.
- QR Code is a trademark of Denso Wave Inc.
- All other system names and product names are registered trademarks or trademarks of their respective owners. Trademarked items are not indicated by ® or ™ symbols in this Help Guide.

Maximum external dimensions

Maximum external dimensions, including protrusions (approximate values)
Units: mm (inch)

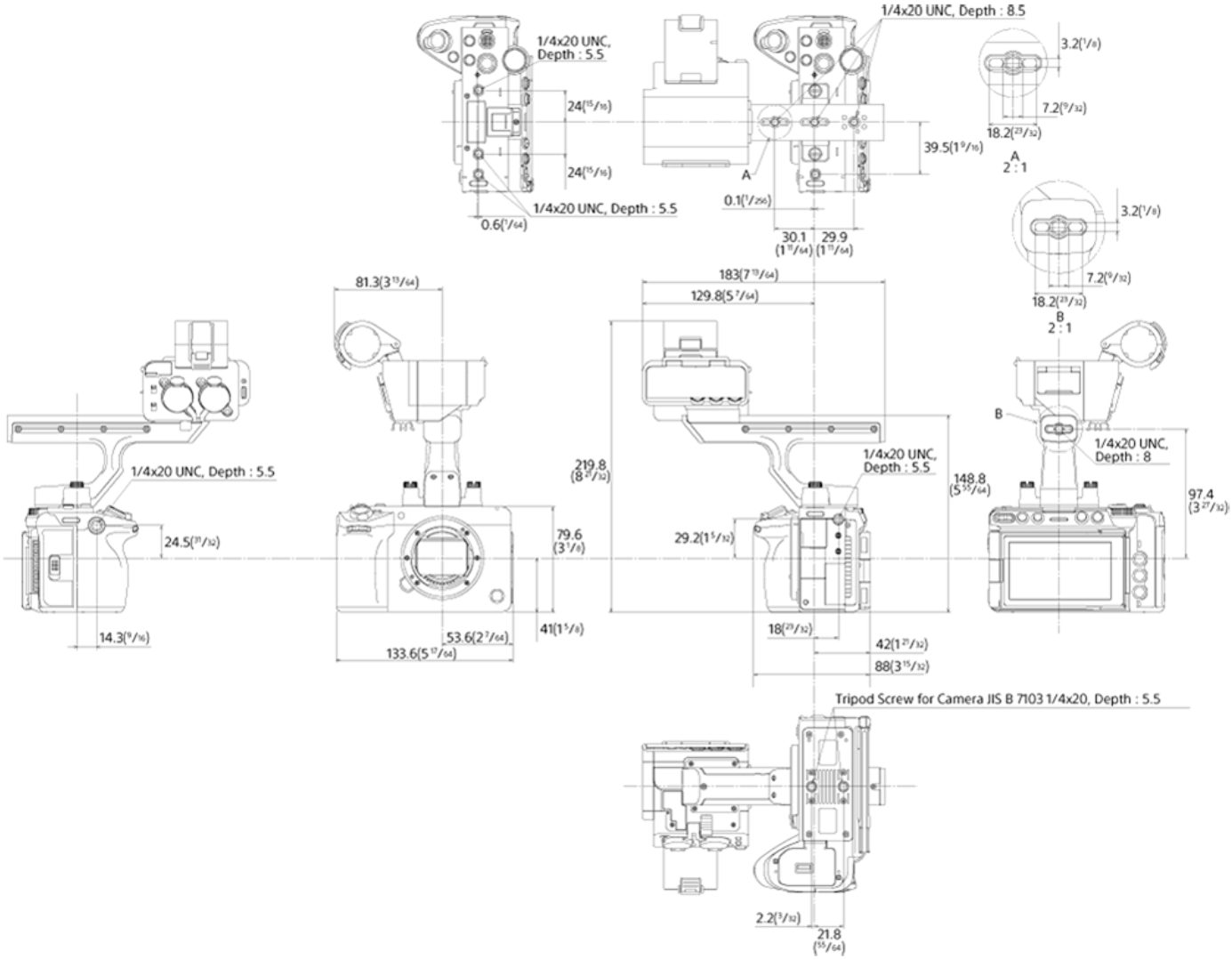

TP1002215379

5-076-802-11(2) Copyright 2026 Sony Corporation