Interchangeable Lens Digital Camera
ILCE-7M5 α7V

WW824259/WW084220/WW486983

Recommended pages in the Help Guide

Finding functions from MENU

You can check the list of the menu items. You can also move to the explanation page for each item from the menu item on the list.

Memory cards that can be used

Information about memory cards that can be used with this camera.

Customization features of the camera

The camera has various customization features, such as custom keys and a function to register shooting settings.

Focusing using subject recognition functions

The camera will automatically recognize the subject and can focus on the eyes, etc. when shooting images.

Anti-dust Function

You can clean the image sensor. You can also set whether or not to close the shutter when you turn off the camera.

Bluetooth Rmt Ctrl

You can operate the camera using a Bluetooth compatible remote commander (sold separately) or shooting grip (sold separately).

Support information

Firmware, Questions & Answers and Compatibility

This website provides Firmware update, Question & Answers and Compatibility information

Basic Knowledge

Improve your shooting techniques by learning the basics of camera.

Shooting tips

Learn how to choose lenses and shooting techniques in various scenes.

How to use the “Help Guide”

Notes on using your camera

Safety precautions

Precautions

Lending, transferring or discarding the camera and/or memory card to others (Notes on protecting private information)

Notes on the battery pack and charging the battery

Notes on memory card

Cleaning the image sensor (Sensor Cleaning)

On cleaning

Checking the camera and the supplied items

Names of parts

Front side

Rear side

Top side

Sides

Bottom

Basic icons displayed on the monitor

Touch function icons

FE 28-70mm F3.5-5.6 OSS II

Basic operations

Touch panel

Touch function icons

Control wheel

Multi-selector

Still/Movie/S&Q dial and mode dial

MENU button

Main menu (shooting setting list)

Fn (function) button

C (custom) buttons

DISP (Display Setting) button

Delete button

AEL button

AF-ON button

Front dial and rear dial (L/R)

Keyboard screen

In-Camera Guide

Functions for accessibility

Preparing the camera/Basic shooting operations

Charging the battery pack

- Inserting/removing the battery pack
- Charging the battery with a USB-PD-compatible device
- Using the battery charger abroad

Using the camera with power supplied via USB

Memory cards that can be used

Inserting/removing a memory card

Attaching/removing a lens

Performing initial setup for the camera

Basic shooting operations

- Confirmation before shooting
- Shooting still images (Intelligent Auto)
- Shooting movies (Intelligent Auto)

Finding functions from MENU

Using the shooting functions

Contents of this chapter

Selecting a shooting mode

- Intelligent Auto
- Program Auto
- Aperture Priority
- Shutter Priority
- Manual Exposure
- Bulb shooting
- BULB Timer Settings
- Exposure Ctrl Type
- Auto/Manual Swt. Set.
- Shoot Mode (S&Q/time-lapse)
- Selecting a shooting mode using menu operations (Shoot Mode)

Convenient functions for shooting self-portrait videos and vlogs

- Self-timer (movie)
- Auto Framing Settings
- Framing Stabilizer

Focusing

- Selecting the focus method (Focus Mode)
- Selecting the focus area (Focus Area)
- Tracking subject (Tracking function)
- Manual Focus
- Direct manual focus (DMF)

Subject Recognition AF

- Focusing using subject recognition functions
- Subject Recog in AF (still image/movie)
- Recognition Target (still image/movie)
- Recog Trgt Select Set (still image/movie)
- Right/Left Eye Select (still image/movie)

Sbj Recog Frm Disp. (still image)
Sbj Recog Frm Disp. (movie)
Face Memory (still image/movie)
Regist. Face Priority (still image/movie)
Selecting a person to track (Select Face to Track)

Using focusing functions

Focus Standard
Adjusting the focus area settings to the camera's orientation (horizontal/vertical) (Switch V/H AF Area)
Registering the current focus area (AF Area Registration)
Deleting a registered AF Area (Del. Regist. AF Area)
Focus Area Limit (still image/movie)
Circ. of Focus Point (still image/movie)
AF Frame Move Amt (still image/movie)
Focus Area Color (still image/movie)
AF Area Auto Clear
Area Disp. dur Tracking
AF-C Area Display
Phase Detect. Area
AF Lvl for Crossing
AF Trk for Spd Chng
AF Transition Speed
AF Subj. Shift Sensitivity
AF Assist
AF/MF Selector
Full Time DMF
AF w/ Shutter
AF On
Focus Hold
Priority Set in AF-S
Priority Set in AF-C

AF Illuminator
Aperture Drive in AF
Preset Focus/Zoom
AF in Focus Mag.
Auto Magnifier in MF
Focus Magnifier
Focus Magnif. Time (still image/movie)
Initial Focus Mag. (still image)
Initial Focus Mag. (movie)
Focus Map
Peaking Display

Adjusting the exposure/metering modes

Exposure Comp. (still image/movie)
Histogram display
Exposure step (still image/movie)
Exposure Std. Adjust (still image/movie)
D-Range Optimizer (still image/movie)
Metering Mode (still image/movie)
Face Priority in Multi Metering (still image/movie)
Spot Metering Point (still image/movie)
AE lock
AEL w/ Shutter
Auto Slow Shutter
Zebra Display

Selecting the ISO sensitivity

ISO (still image/movie)
ISO Range Limit (still image/movie)
ISO AUTO Min. SS

White balance

White Balance (still image/movie)

Capturing a standard white color to set the white balance (custom white balance)
WB Capt. Frame Size (still image/movie)
Priority Set in AWB (still image/movie)
Shutter AWB Lock
Shockless WB

Log shooting settings

Log shooting
Log Shooting Setting
Select LUT
Manage User LUTs
Display LUT

Adding effects to images

Creative Look (still image/movie)
Picture Profile (still image/movie)
Soft Skin Effect (still image/movie)

Shooting with drive modes (continuous shooting/self-timer)

Drive Mode
Drive Mode Limit
Cont. Shooting
Cont. Shooting Speed
Cnt Shoot Speed Boost
Pre-Capture Settings
Selection/Memo Shot
Self-timer(Single)
Self-timer(Cont)
Cont. Bracket
Single Bracket
Indicator during bracket shooting
Focus Bracket
WB bracket

DRO Bracket
Bracket Settings
Self-timer (movie)
Interval Shoot Func.
Shooting still images with higher image quality
NR Shooting Settings
Shooting for HDR Set
Setting the image quality and recording format
JPEG/HEIF Switch
Image Quality Settings: File Format (still image)
Image Quality Settings: RAW File Type
Image Quality Settings: JPEG Quality/HEIF Quality
Image Quality Settings: JPEG Image Size/HEIF Image Size
Aspect Ratio
HLG Still Image
Color Space
File Format (movie)
Movie Settings (movie)
S&Q Settings
Time-lapse Settings
4K angle of view Priority
Proxy Settings
APS-C S35 (Super 35mm) Shooting (still image/movie)
Angle of view
Using touch functions
Touch Operation
Touch Panel/Pad
Touch Panel Settings
Touch Pad Settings

Touch Sensitivity
Focusing using touch operations (Touch Focus)
Starting tracking with touch operations (Touch Tracking)
Shooting with touch operations (Touch Shutter)
Adjusting the exposure with touch operations (Touch AE)

Shutter settings

Silent Mode Settings (still image/movie)
Shutter Type
Using the electronic shutter
Shoot. Start Display (still image)
Shoot. Timing Display (still image)
e-Front Curtain Shut.
Release w/o Lens (still image/movie)
Release w/o Card
Anti-flicker Set.
Differences between the [Anti-flicker Shoot.] and [Var. Shutter] functions

Using the zoom

The zoom features available with this product
Clear Image Zoom/Digital Zoom (Zoom)
Zoom Range (still image/movie)
Custom Key Z. Speed (still image/movie)
Remote Zoom Speed (still image/movie)
About zoom scale
Zoom Ring Rotate

Using the flash

Using flash (sold separately)
Flash Mode
Flash Comp.
Exp.comp.set
Wireless Flash

- Red Eye Reduction
- FEL lock
- External Flash Set.
- Reg. Flash Shooting Set

Reducing blur

- SteadyShot (still image)
- SteadyShot (movie)
- SteadyShot Adjust. (still image/movie)
- SteadyShot focal length (still image/movie)
- Framing Stabilizer

Lens Compensation (still image/movie)

Noise reduction

- Long Exposure NR
- High ISO NR

Setting the monitor display during shooting

- Shoot Mode Sel. Screen
- Auto Review (still image)
- Remain Shoot Display (still image)
- Grid Line Display (still image/movie)
- Grid Line Type (still image/movie)
- Live View Display Set.
- Aperture Preview
- Shot. Result Preview
- Bright Monitoring
- Emphasized REC Display
- Marker Display (still image)
- Marker Display (movie)
- Gamma Display Assist
- Gamma Disp. Assist Typ.

Recording movie audio

Audio Recording
Audio Rec Level
Audio Out Timing
Audio NR Settings
Shoe Audio Set.

Creating still images while recording a movie

Automatic creation of still images from Shot Marks
Shot Marks after still image creation (shooting)

TC/UB settings

TC/UB
TC/UB Disp. Setting

Livestreaming video and audio

Network Streaming (movie)
USB Streaming (movie)

Customizing the camera

Contents of this chapter

Customization features of the camera

Assigning frequently used functions to buttons and dials (Custom Key/Dial Set.)

Changing the function of the dial temporarily (My Dial Settings)

Registering and recalling camera settings

Camera Set. Memory
Recall Camera Setting
Memory/Recall Media
Registering shooting settings to a custom key (Reg. Custom Shoot Set)

Registering frequently used functions to the function menu

Fn Menu Settings (still image/movie)
Fn Menu Settings (playback)

Registering frequently used functions to My Menu

Add Item

Sort Item
Delete Item
Delete Page
Delete All
Display From My Menu

Separately adjusting the camera settings for still images and movies

Different Set for Still/Mv

Customizing the functions of the ring/dial

Av/Tv Rotate
Function Ring(Lens)
Lock Operation Parts

Using the shutter button when shooting movies

REC w/ Shutter (movie)
Adding Shot Marks with the shutter button (movies)

Monitor/viewfinder settings

Select Finder/Monitor
Monitor Flip Direction
Vertical Display
DISP (Screen Display) (still image)
DISP (Screen Display) (movie)

Viewing

Contents of this chapter

Viewing images

Play Set of Multi. Media
Disp Set of Multi Media
Playing back still images
Enlarging an image being played back (Enlarge Image)
Enlarge Initial Mag.
Enlarge Initial Position

- Rotating recorded images automatically (Display Rotation)
- Playing back movies
- Playback/Monitor. Vol.
- 4ch Audio Monitoring (movie)
- Playing back images using slideshow (Slide Show)
- Cont. Play for Interval
- Play Speed for Interval

Changing how images are displayed

- Playing back images on the image index screen (Image Index)
- Playback Filter Condition
- Image Order
- Display as Group
- Focus Frame Display (playback)
- Aspect Marker Disp. (still image)
- Disp Specified Time Img.

Setting the method for jumping between images (Image Jump Setting)

Protecting recorded images (Protect)

Adding information to images

- Rating
- Rating Set(Custom Key)
- Clip Flag
- Rotating an image (Rotate)

Crop

Extracting still images from a movie

- Photo Capture
- Creating still images from Shot Marks
- Shot Marks after still image creation (playback)
- JPEG/HEIF Switch (Photo Capture / Creating still images from Shot Marks)

Copying images from one memory card to another (Copy)

Deleting images

- Deleting multiple selected images (Delete)
- Delete pressing twice
- Delete confirm.
- Delete Slot1/2
- Initial Pos. When Exec

Viewing images on a TV

- Viewing images on a TV using an HDMI cable

Changing the camera settings

Memory card settings

- Format
- Rec. Media Settings (still image/movie): Recording Media (still image)
- Rec. Media Settings (still image/movie): Recording Media (movie)
- Rec. Media Settings (still image/movie): Auto Switch Media Card
- Recover Image DB (still image/movie)

File settings

- File/Folder Settings
- Select REC Folder
- Create New Folder
- File Settings
- IPTC Information
- Copyright Info
- Write Serial Number (still image/movie)

Network settings

- Wi-Fi Connect
- WPS Push
- Access Point Set.
- Wi-Fi Frequency Band (models supporting 5 GHz)
- Display Wi-Fi Info.

- SSID/PW Reset
- Bluetooth Settings
- Bluetooth Rmt Ctrl
- Wired LAN (USB LAN)
- USB LAN/Tethering
- Airplane Mode
- Edit Device Name
- Importing root certification to the camera (Import Root Certificate)
- Access Authen. Settings
- Access Authen. Info
- Wi-Fi Direct Settings
- Reset Network Set.
- FTP Transfer Func.

Viewfinder/monitor settings

- Monitor Brightness
- Viewfinder Bright.
- Finder Color Temp.
- Finder Frame Rate (still image)

Power settings

- Monitor Low Bright (still image)
- Monitor Off (still image)
- Power Save
- Power Save by Monitor
- Auto Power OFF Temp.
- Display Quality (still image)

USB settings

- USB Cnct Mode (PORT1)/USB Cnct Mode (PORT2)
- USB LUN Setting
- USB Power Supply

External output settings

HDMI Resolution
HDMI Output Settings (movie)
HDMI Info. Display
CTRL FOR HDMI

General settings

Language
Area/Date/Time Setting
NTSC/PAL Selector
Audio Signal(Shooting)
Audio Signal(Start/End)
Audio Signal Volume
Video Light Mode
Anti-dust Function
Auto Pixel Mapping
Pixel Mapping
Version
Display Serial Number
Privacy Notice
Screen Reader
Enlarge Screen
Mode Dial Control Set
Certification Logo (For some models only)
Save/Load Settings
Setting Reset

Functions available with a smartphone

Functions available with a smartphone (Creators' App)

Monitor & Control

Pairing the camera with a smartphone (Smartphone Connection)

Using a smartphone as a remote commander

Using a smartphone as a remote commander
Remote Shoot Setting
Transferring images to a Smartphone
Select on Cam & Send (transferring to a smartphone)
Reset Transfer Status (transferring to a smartphone)
Connecting while the camera is turned OFF
Cnct. while Power OFF (smartphone)
Reading location information from a smartphone
Using a computer
Recommended computer environment
Connecting/disconnecting the camera and a computer
Connecting the camera to a computer
Disconnecting the camera from the computer
Managing and editing images on a computer
Importing still images/movies to a computer
Introduction to desktop application (Imaging Edge Desktop/Catalyst)
Operating the camera from a computer
Operating the camera from a computer (Remote Shoot Function)
Remote Shoot Setting
USB Streaming (movie)
Using the cloud service
Creators' Cloud
Creating an account for Creators' Cloud and linking your camera to the account (Cloud Connection)
Displaying cloud connection information (Cloud Information)
Notes on using the cloud service (Creators' Cloud)
Appendix
Audio accessories compatible with the Multi Interface Shoe
Vertical grip
Mount Adaptor

Mount Adaptor
LA-EA3/LA-EA5 Mount Adaptor
LA-EA4 Mount Adaptor
Multi Battery Adaptor Kit
Battery life and number of recordable images
Number of recordable images
Recordable movie times
List of icons on the monitor
List of icons on the screen for shooting still images
List of icons on the screen for shooting movies
List of icons on the playback screen
List of default setting values
List of default setting values (Shooting)
List of default setting values (Exposure/Color)
List of default setting values (Focus)
List of default setting values (Playback)
List of default setting values (Network)
List of default setting values (Setup)
List of default setting values (My Menu)
Specifications
Trademarks
License
If you have problems
Troubleshooting
Warning messages

5-069-971-11(6) Copyright 2026 Sony Corporation

Interchangeable Lens Digital Camera
ILCE-7M5 α7V

How to use the “Help Guide”

The “Help Guide” is a “Web Instruction Manual” that has been designed to describe the functions and operating methods of this camera. Use the “Help Guide” to search for any information that you require in order to make full use of the camera.
(The “Help Guide” screens shown on this page are for reference only. They may differ from the actual on-screen display of your model.)

Hint

- The “Startup Guide” supplied with the camera describes basic operating methods and precautions for use. Please refer to the “Startup Guide” in combination with this “Help Guide.”

Icons used in the “Help Guide”

: Menu items displayed in the still image shooting modes
: Menu items displayed in the movie recording modes and slow-motion/quick-motion shooting modes
: Menu items displayed in any of the still image shooting modes, movie recording modes, or slow-motion/quick-motion shooting modes
For details on the relationship between each shooting mode and the menu, refer to “MENU button.”

Finding your desired information

Method A: Searching by keyword
Enter a search keyword (“white balance,” “focus area,” etc.), and use the search results to display the description page that you want to view. If you enter two or more keywords by separating them with spaces (blanks), you can search for pages that contain all of those keywords.

Method B: Viewing the table of contents
Click (Table of contents) to display the table of contents. Select a heading from the table of contents to display the description page.

Screen displayed on a computer

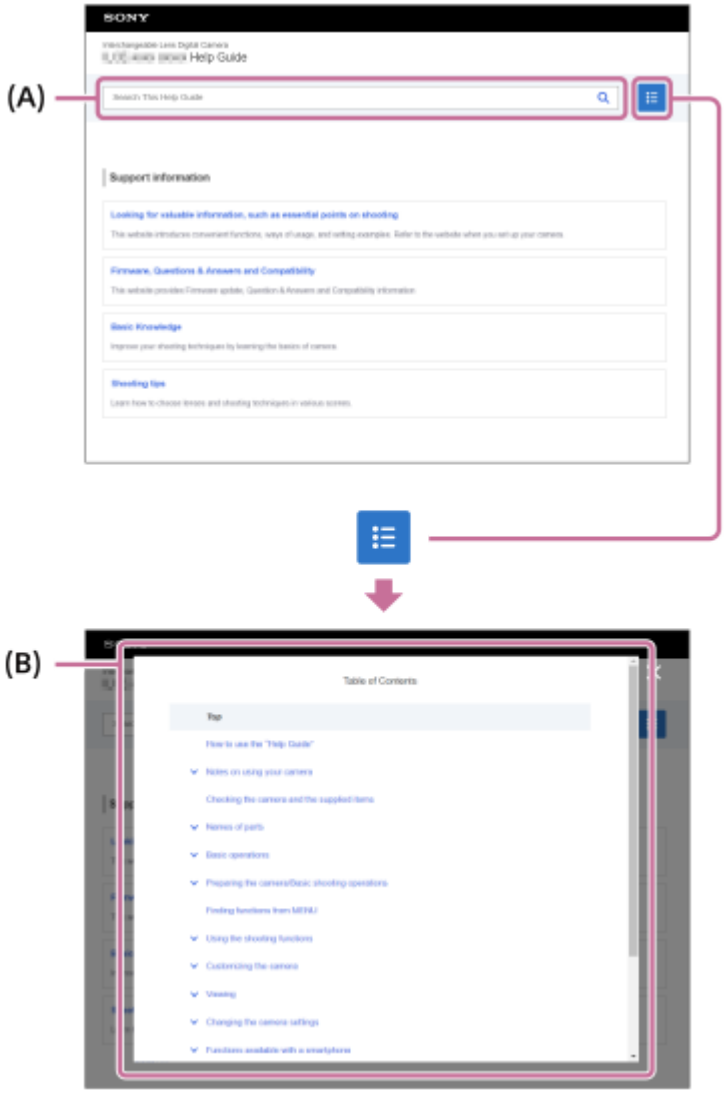

Screen displayed on a smartphone

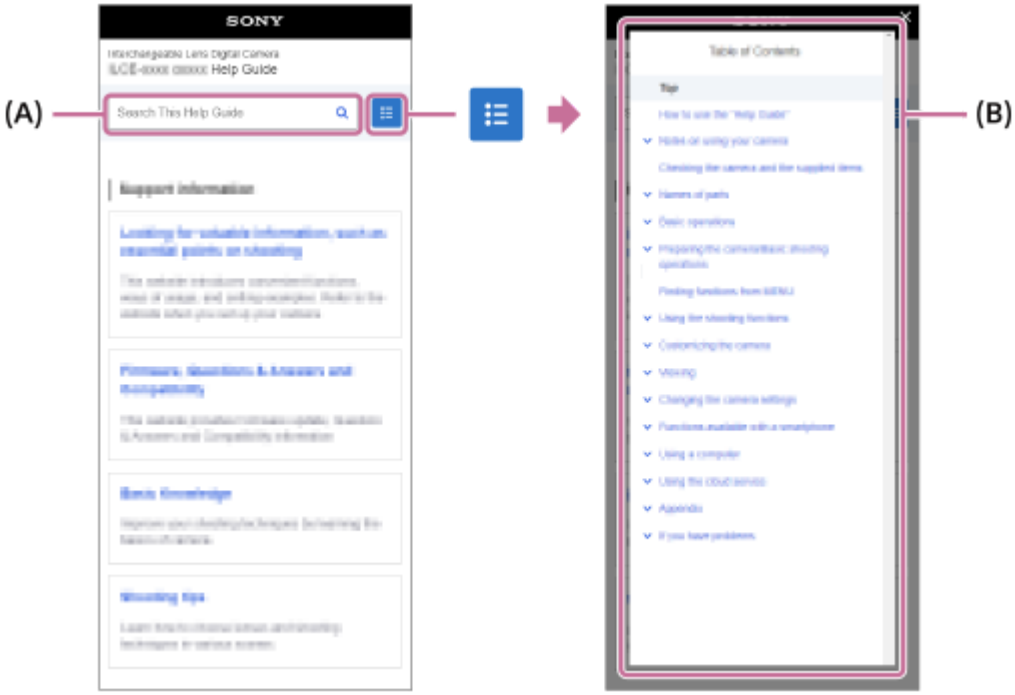

Method C: Finding functions from MENU

If you want to search for information while checking it against the MENU screen of the camera, use the "Finding functions from MENU" page. Select a MENU item from the list to go directly to the description page.

Viewing information about related features

“Related Topic” at the bottom of each page lists sections that contain information related to the description page currently being displayed. For a deeper understanding of the currently displayed page, refer to the listed sections as well.

Going to the previous/next page

Select the “Previous” or “Next” in the bottom of the page to move to the previous or next page without returning to the table of contents.

Printing all the pages of the “Help Guide”

To print all the pages, select the [Download PDF] button in the bottom left corner of the top page. When the PDF file appears, use the printing menu of the browser to print it out.
This function is not available for certain languages.

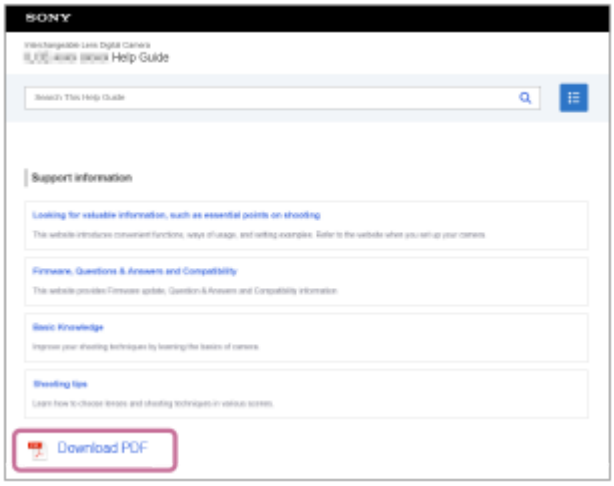

Printing only the currently displayed page (only on a computer)

To print only the page currently being displayed, select the [Print This Page] button at the bottom of the page. When the printing screen appears, specify your printer.

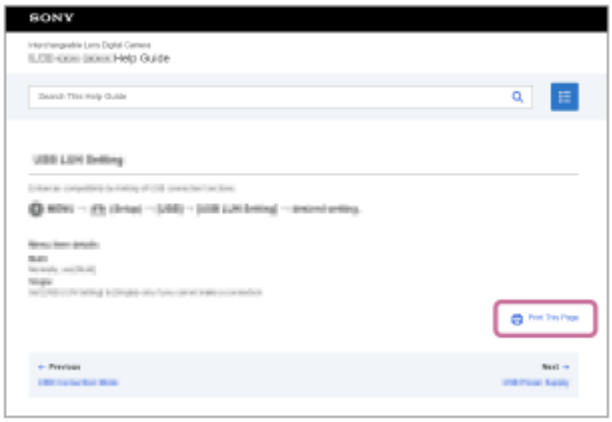

Changing the display language

Go to the language selection page from [Language Selection Page] at the bottom of the page and select a language.

TP1002151039

5-069-971-11(6) Copyright 2026 Sony Corporation

Safety precautions

To prevent injury or electric shock due to improper use, as well as damage to property such as fire, be sure to observe the following.

⚠ Warning

To avoid serious injury or burns; fire due to leakage, overheating, ignition, or explosion; or accidental ingestion, read the following precautions carefully.

Rechargeable battery pack included

Battery pack

- **If used improperly, the battery may explode and cause a fire or chemical burns. Observe the following precautions:**
  - Do not disassemble or modify the battery pack.
  - Do not apply shock or force to the battery pack, such as by hitting it with a hammer or stepping on or dropping it.
  - Do not short-circuit the battery pack or allow the battery pack to come into contact with any metal objects such as paperclips.
  - Do not leave the battery pack in locations where the temperature may reach 60°C (140°F) or higher, such as in a car parked under direct sunlight.
  - Do not dispose of battery packs in fire or incinerate them.
  - Do not use leaking or damaged lithium-ion batteries.
  - Do not charge the battery pack in any manner other than that specified.
  - Keep the battery pack out of reach of infants and children.
  - Do not expose the battery pack to water.
  - Be sure to use only genuine Sony branded battery packs.
  - Recycle used batteries.
  - Do not leave the battery pack in extremely cold environments at -20°C (–4°F) or lower or in extremely low-pressure environments at 11.6 kPa or lower.

Coin battery / button cell

- **Do not swallow coin batteries or button cells. They can cause chemical burns.**
  - This product contains a coin battery or button cell. If you swallow a coin battery or button cell, death or serious injury may occur. A swallowed coin battery or button cell can cause internal chemical burns in as little as 2 hours.
  - Keep new and used batteries out of reach of children. If the battery cover does not close securely, stop using the camera and keep it out of the reach of children.
  - Seek immediate medical attention if a battery is suspected to have been swallowed or inserted inside any part of the body.

- **Do not charge coin batteries or button cells.**
- **If the battery leaks, observe the following.**
  - Immediately remove the battery from any sources of fire. There is a risk of fire or explosion due to leaked liquid or gas from the battery igniting.
  - If leaked liquid gets into your eyes, do not rub them. Instead, immediately wash them thoroughly with clean water and seek medical attention.
  - If you get leaked liquid in your mouth or lick it, immediately rinse your mouth with water and seek medical attention.
  - If leaked liquid gets on your body or clothes, rinse it off thoroughly with water.

⚠ Caution

If you do not observe the following precautions, fire, serious injury, or death may occur.

- **Do not disassemble or modify this product.**
  - Doing so may result in fire or electric shock. For inspection or repair, consult your dealer or local authorized service facility.
- **Do not allow water or any objects (metal, flammable objects, etc.) to get inside the product.**
  - Doing so may result in fire or electric shock. If water or other objects get into the product, immediately turn off the camera and remove the battery. Unplug the AC adaptor and battery charger from the wall outlet (wall socket), and then consult your dealer or local authorized service facility.
- **Do not use the product while driving.**
  - Do not shoot or play back images or look at the monitor while driving a car or motorcycle, etc. Doing so may result in a traffic accident.
- **Pay attention to your surroundings while shooting.**
  - Do not shoot images without being aware of your surroundings. Doing so may cause accidents or injuries.
- **Do not touch a powered AC adaptor, powered battery charger, or charging battery for long periods of time.**
  - Even if the product or its accessories do not feel hot to you while using them, leaving the same part of the skin exposed to them for a long time may cause low-temperature burns, resulting in redness and blisters.
- **Do not damage cables.**
  - Placing cables near a heater or heating or processing cables may cause a fire or electric shock. When unplugging cables, always hold the plug to avoid damaging the cord.
- **Do not point a flash or assist light such as the AF illuminator at people at a close distance.**
  - Using a flash or assist light at a close distance may cause vision problems. When you shoot infants and small children, keep a distance of 1 m (3.28 ft.) or more.
  - Emitting a flash or an assist light at drivers may dazzle them and cause an accident.
- **Do not look at sunlight or a strong light source through the camera viewfinder or removed lens.**
  - Doing so may result in vision impairment or blindness.
- **Do not use the product with wet hands.**
  - Doing so may cause an electric shock.
- **Attach the battery pack, the shoulder belt, and the strap correctly.**
  - If these are not attached correctly, the product may fall and cause an injury. Also, make sure that the belt or strap is not damaged before use.

⚠ Notes

To prevent injury or damage to property, be sure to observe the following.

- **Do not use the product in highly humid locations where water droplets may fall, etc. or in locations exposed to a lot of dust, oily smoke, or steam.**
  - Doing so may cause a fire or electric shock.
- **Do not place the product in an unstable location.**

- Placing the product on an unstable or tilted surface or using the tripod in an unstable position may cause the product to fall or tip over and result in injury.

- **Do not cover the product with a cloth while in use.**
  - Doing so may cause heat to build up inside, resulting in deformation of the case or even fire or electric shock.

- **Do not subject the lens or monitor to impacts.**
  - The lens and monitor are made of glass and may break if subjected to a strong impact, resulting in injury.

- **When using headphones, do not listen at high volumes for long periods of time.**
  - Listening at high volumes for long periods of time may have a detrimental effect on your hearing.

- **Do not leave the lens under direct sunlight.**
  - Sunlight may focus through the lens and cause a fire.

- **Be careful in handling the product when using it with other accessories attached via brackets, etc.**
  - It may cause an unexpected accident due to falling, etc.

- **Disconnect the product from the power source before a long period of time without using it.**
  - If you will not use the product for a long period of time, unplug the power cord from the wall outlet (wall socket) and remove the battery from the product before storing it.

TP1002161085

5-069-971-11(6) Copyright 2026 Sony Corporation

Precautions

Refer also to “Notes on use” in the Startup Guide (supplied) for this product.

We use environmentally conscious packaging materials

Environmentally conscious packaging materials were used for the camera and supplied accessories. Due to the characteristics of the packaging materials, note the following points.

- Powder, etc. from the packaging materials may adhere to the camera or supplied accessories. In this case, remove it with a commercially available blower or cleaning paper before use.
- The packaging materials will deteriorate with continuous use. Be careful when carrying the product by the packaging.

On the data specifications described in this manual

- The data on performance and specifications in this manual are based on an ordinary ambient temperature of 25ºC (77°F), except where otherwise indicated.
- For the battery pack, the data are based on a battery pack that was fully charged until the charge lamp turned off.

On operating temperatures

- Shooting in extremely cold or hot environments that exceed the operating temperature range is not recommended.
- Under high ambient temperatures, the temperature of the camera rises quickly.
- When the temperature of the camera rises, the image quality may deteriorate. It is recommended that you wait until the temperature of the camera drops before continuing to shoot.
- Depending on the camera and battery temperature, the camera may become unable to record movies or the power may turn off automatically to protect the camera. A message will be displayed on the screen before the power turns off or you can no longer record movies. In this case, leave the power off and wait until the camera and battery temperature goes down. If you turn on the power without letting the camera and battery cool sufficiently, the power may turn off again, or you may still be unable to record movies.

Notes on recording/streaming for long periods of time or recording 4K movies

- During use, the camera and battery may become warm. This is not a malfunction.
- Especially during 4K shooting, the recording time may be shorter under low temperature conditions. Warm up the battery pack or replace it with a new battery.

Notes on playing movies on other devices

XAVC HS and XAVC S movies can only be played back on compatible devices.

Notes on recording/playback

- Before you start recording, make a trial recording to make sure that the camera is working correctly.
- The recorded image may be different from the image you monitored before recording.
- Playback of images recorded with your product on other equipment and playback of images recorded or edited with other equipment on your product are not guaranteed.
- Sony can provide no guarantees in the event of failure to record, or loss of or damage to recorded images or audio data, due to a malfunction of the camera or recording media, etc. We recommend backing up important data.
- Once you format the memory card, all the data recorded on the memory card will be deleted and cannot be restored. Before formatting, copy the data to a computer or other device.
- Attach the shoulder strap to the camera to prevent it from falling.

- When using this product with a tripod or grip, be sure to attach the camera securely.

Notes on using a tripod

Use a tripod with a screw less than 5.5 mm (7/32 inches) long. Otherwise, you cannot firmly secure the camera, and damage to the camera may occur.

Notes on handling memory cards

The temperature of memory cards may rise after saving. This is not a malfunction.

Backing up memory cards

Data may be corrupted in the following cases. Be sure to back up the data for protection.

- When the memory card is removed, the USB cable is disconnected, or the product is turned off in the middle of a read or write operation.
- When the memory card is used in locations subject to static electricity or electrical noise.

Database file error

- If you insert a memory card that does not contain an image database file into the product and turn on the power, the product automatically creates an image database file using some of the memory card's capacity. The process may take a long time and you cannot operate the product until the process is completed.
- If a database file error occurs, export all the data to your computer, etc. to save it, and then format the memory card using this product.

Do not use/store the product in the following places

- In an extremely hot, cold or humid place
  In places such as in a car parked in the sun, the camera body may become deformed and this may cause a malfunction.
- Storing under direct sunlight or near a heater
  The camera body may become discolored or deformed, and this may cause a malfunction.
- In a location subject to rocking vibration
  It may cause malfunctions and an inability to record data. In addition, the recording media may become unusable, and recorded data may be corrupted.
- Near strong magnetic place
- In sandy or dusty places
  Be careful not to let sand or dust get into the product. This may cause the product to malfunction, and in some cases this malfunction cannot be repaired.
- In places with high humidity
  This may cause the lens to mold.
- In areas where strong radio waves or radiation are being emitted
  Recording and playback may not function correctly.

On moisture condensation

- If the product is brought directly from a cold to a warm location, moisture may condense inside or outside the product. This moisture condensation may cause a malfunction of the product.
- To prevent moisture condensation when you bring the product directly from a cold to a warm location, first put it in a plastic bag and seal it to prevent air from entering. Wait for about an hour until the temperature of the product has reached the ambient temperature.
- If moisture condensation occurs, turn off the product and wait about an hour for the moisture to evaporate. Note that if you attempt to shoot with moisture remaining inside the lens, you will be unable to record clear images.

Precaution on carrying

- Do not hold, hit, or apply excessive force to the following parts, if your camera is equipped with them:

- The lens part
- The movable monitor part
- The movable flash part
- The movable viewfinder part

- Do not carry the camera with the tripod attached. This may cause the tripod socket hole to break.
- Do not sit down in a chair or other place with the camera in the back pocket of your trousers or skirt, as this may cause malfunction or damage the camera.

Notes on handling the product

- Although this camera is designed and built to be dustproof and drip-proof, it cannot completely prevent the ingress of dust or water droplets.
- Before you connect the cable to the terminal, be sure to check the orientation of the terminal. Then, insert the cable straight. Do not insert or remove the cable forcefully. This may cause the terminal part to break.
- The camera uses magnetic parts including magnets. Do not bring objects affected by magnetism, including credit cards and floppy disks, close to the camera.

On storing

- For lens-integrated cameras
  Always attach the lens cap when you are not using the camera. (Only for models supplied with a lens cap)
- For interchangeable-lens cameras
  Always attach the lens front cap or body cap when you are not using the camera. To prevent dust or debris from getting inside the camera, remove dust from the body cap before attaching it to the camera.
- If the camera is dirty after use, clean it. Water, sand, dust, salt, etc. left in the camera may cause a malfunction.

Notes on using lenses

- When using the power zoom lens, be careful not to get your fingers or any other objects caught in the lens. (Only for models with a power zoom feature or interchangeable lens cameras)
- If you must place the camera under a light source such as sunlight, attach the lens cap to the camera. (Only for models supplied with a lens cap or interchangeable lens cameras)
- If sunlight or a strong light source enters the camera through the lens, it may focus inside the camera and cause smoke or fire. Attach the lens cap to the lens when storing the camera. When you shoot with backlighting, keep the sun sufficiently far away from the angle of view. Note that smoke or fire may occur even if the light source is slightly away from the angle of view.
- Do not directly expose the lens to beams such as laser beams. These may damage the image sensor and cause the camera to malfunction.
- If the subject is too close, the image may show any dust or fingerprints on the lens. Wipe the lens with a soft cloth, etc.

Notes on the flash (Only for models with a flash)

- Keep your fingers away from the flash. The light-emitting part may get hot.
- Remove any dirt from the surface of the flash. Dirt on the surface of the flash may emit smoke or burn due to heat generated by the emission of light. If there is dirt/dust, clean it off with a soft cloth.
- Restore the flash to its original position after using it. Make sure that the flash portion is not sticking up. (Only for models with a movable flash)

Notes on the Multi Interface Shoe (Only for models with a Multi Interface Shoe)

- When attaching or detaching accessories to or from the Multi Interface Shoe, first turn off both the accessory and the camera. When attaching an accessory, confirm that it is firmly fastened to the camera.
- Do not use the Multi Interface Shoe with a commercially available flash that applies voltages of 250 V or more or has the opposite polarity of the camera. It may cause a malfunction. (Only models that support flash shooting)

Notes on the viewfinder and flash (Only for models with a viewfinder or a flash)

- Take care that your finger is not in the way when pushing the viewfinder or flash down. (Only for models with a movable viewfinder or a movable flash)
- If water, dust or sand adheres to the viewfinder or flash unit, it may cause a malfunction. (Only for models with a movable viewfinder or a movable flash)

Notes on the viewfinder (Only for models with a viewfinder)

- When shooting with the viewfinder, you may experience symptoms such as eyestrain, fatigue, travel sickness, or nausea. We recommend that you take a break at regular intervals when you are shooting with the viewfinder.
  In case you may feel uncomfortable, refrain from using the viewfinder until your condition recovers, and consult your doctor if necessary.
- Although the viewfinder is built with high-precision technology for 99.99% or more effective pixels, black dots may appear, and white, red, blue, and green dots may not disappear. This is not a malfunction. These dots are not recorded.
- Do not forcibly push down the viewfinder when the eyepiece is pulled out. It may cause a malfunction. (Only for models with a movable viewfinder and an eyepiece that can be pulled out)
- If you pan the camera while looking into the viewfinder or move your eyes around, the image in the viewfinder may be distorted or the color of the image may change. This is a characteristic of the lens or display device and is not a malfunction. When you shoot an image, we recommend that you look at the center area of the viewfinder.
- The image may be slightly distorted near the corners of the viewfinder. This is not a malfunction. When you want to see the full composition with all its details, you can also use the monitor.
- If you use the camera in a cold location, the image may have a trailing appearance. This is not a malfunction.
- When the temperature of the camera changes, the color tone of the viewfinder display may change due to the characteristics of the display device.
- Do not directly expose the viewfinder to beams such as laser beams. These may damage the inside of the viewfinder and cause the camera to malfunction.

Notes on the monitor

- Although the monitor is built with high-precision technology for 99.99% or more effective pixels, black dots may appear, and white, red, blue, and green dots may not disappear. This is not a malfunction. These dots are not recorded.
- Do not press against the monitor. The monitor may be discolored and that may cause a malfunction.
- If the monitor has drops of water or other liquids on it, wipe it with a soft cloth. If the monitor stays wet, the surface of the monitor may change or deteriorate. This may cause a malfunction.
- If you use the camera in a cold location, the image may have a trailing appearance. This is not a malfunction.
- When you connect cables to the terminals on the camera, the rotating range of the monitor may become limited. (Only for models with a movable panel)

Notes on the image sensor

If you point the camera at an extremely strong light source while shooting images with a low ISO sensitivity, highlighted areas in the images may be recorded as black areas.

On image data compatibility

This product conforms with DCF (Design rule for Camera File system) universal standard established by JEITA (Japan Electronics and Information Technology Industries Association).

Services and software provided by other companies

Network services, content, and the [operating system and] software of this Product may be subject to individual terms and conditions and changed, interrupted or discontinued at any time and may require fees, registration and credit card information.

Notes on connecting to the internet

- When connecting to a wireless LAN network, this camera cannot connect to an access point that only uses WEP or WPA, which are security methods with potential vulnerabilities.

- This camera is not a network device (e.g., a router or switching hub). We strongly recommend connecting this camera to a network that can be properly configured and managed to protect against network-based attacks such as DoS (Denial of Service) attacks.
- When connecting this camera to a network, connect it via a properly configured and managed router or connect it to a LAN port with the same functionality as such a router. If you do not connect it in this way (for example, if you connect it to a free Wi-Fi network), security issues may occur. Properly configuring the router will provide sufficient protection against DoS attacks or loss of functionality of devices in the network. If you notice any abnormality, immediately disconnect the camera from the network.

Notes on security

- If you set [Security] to [None] in the camera's wireless LAN settings and connect the camera to an access point, wireless communications between the camera and the access point will not be encrypted, and third parties within the signal range may be able to intercept the content of the communications. Use WPA3 or WPA2, which are more secure security methods.
- SONY WILL NOT BE HELD LIABLE FOR DAMAGES OF ANY KIND RESULTING FROM FAILURE TO IMPLEMENT PROPER SECURITY MEASURES ON TRANSMISSION DEVICES, UNAVOIDABLE DATA LEAKS CAUSED BY TRANSMISSION SPECIFICATIONS, OR OTHER SECURITY PROBLEMS.
- Depending on the usage environment, unauthorized third parties on the network may be able to access the product. When connecting the camera to a network, be sure to confirm that the network is protected securely.

Notes on the FTP function

FTP does not encrypt content, usernames, or passwords. To ensure secure transfers, use FTPES (FTPS) or SFTP.

About the SFTP and FTPES (FTPS) functions

The SFTP and FTPES (FTPS) functions support various encryption algorithms to ensure secure file transfers. To ensure compatibility with a wide range of servers, they support multiple encryption algorithms, including some that do not comply with current security best practices. For details, refer to the following URL.
https://helpguide.sony.net/di/sftp/v1/h_zz/index.html

Optional accessories

- It is recommended that you use genuine Sony accessories.
- Some Sony accessories are only available in certain countries and regions.

Available models and kits

Some models and kits are only available in certain countries and regions.

TP1002149660

5-069-971-11(6) Copyright 2026 Sony Corporation

Lending, transferring or discarding the camera and/or memory card to others (Notes on protecting private information)

Important information may be recorded on the camera and/or memory card depending on the functions and camera settings.
Before lending, transferring, or discarding the camera and/or memory card to others, be sure to read the following and make sure that you have completed the procedures.

Notes on lending, transferring, or discarding the camera to others

Before lending, transferring, or discarding the camera to others, be sure to perform the following operation to protect private information.

- Select MENU → (Setup) → [Reset/Save Settings] → [Setting Reset] → [Initialize].

When you initialize the device, the following information is deleted:

- Faces registered in [Face Memory]
- Root certificates for RTMP, the cloud, and the correct date and time
- Root certificates for FTP
- Access point information
- Access authentication information
- FTP server settings
- Cloud connection information
- Network streaming connection information

Notes on using the cloud service (Creators' Cloud)

Before lending or transferring the camera, make sure that the camera linkage information and upload settings are appropriate to prevent damage such as the content on the camera being uploaded to an unintended third party's Creators' Cloud. If the settings are not appropriate, be sure to perform the following operations.

- If you will transfer or lend the camera: initialize the camera or cancel the linkage with Creators' Cloud on the camera. Also, cancel the camera linkage in Creators' Cloud.
- If the camera is transferred to you or you borrow the camera: initialize the camera or cancel the linkage with Creators' Cloud on the camera.

Note that Creators' Cloud may only be available in certain countries and regions.

Notes on lending, transferring, or discarding a memory card to others

Executing [Format] or [Delete] on the camera or a computer may not completely delete the data on the memory card. Before lending or transferring a memory card to others, we recommend that you delete any data on it completely using data deletion software. When discarding a memory card, we recommend that you physically destroy it.

Notes on network functions

When you use network functions, unintended third parties on the network may access the camera, depending on the usage environment. For example, unauthorized access to the camera may occur in network environments to which another network device is connected or can connect without permission. Sony bears no responsibility for any loss or damage caused by connecting to such network environments.

Notes on the [Face Memory] function

Faces registered through the [Face Memory] function are considered biometric information. Before lending or transferring this camera, initialize the camera to prevent face information registered through the [Face Memory] function from being passed on to an unintended third party.

Notes on location information

If you upload and share still images or movies taken with this camera on the Internet while the location information is linked with the dedicated smartphone application, you may accidentally reveal the location information to a third party. To prevent third parties from obtaining your location information, deactivate the [Location Information Linkage] function of the dedicated application.

Warning on copyrights

Television programs, films, videotapes, and other materials may be copyrighted. Unauthorized recording of such materials may be contrary to the provisions of the copyright laws.

Related Topic

- Creating an account for Creators' Cloud and linking your camera to the account (Cloud Connection)
- Displaying cloud connection information (Cloud Information)

TP1002156911

5-069-971-11(6) Copyright 2026 Sony Corporation

Notes on the battery pack and charging the battery

Notes on using the battery pack

- Be sure to use only genuine Sony brand battery packs.
- The correct remaining battery indicator may not be displayed under some operating or environmental conditions.
- Do not expose the battery pack to water. The battery pack is not water-resistant.
- Do not leave the battery pack in extremely hot places, such as in a car or under direct sunlight.

Notes on charging the battery pack

- Charge the battery pack (supplied) before using the product for the first time.
- The charged battery pack will discharge little by little even if you do not use it. Charge the battery pack each time before you use the product so that you do not miss any opportunities to shoot images.
- Do not charge battery packs except battery packs specified for this product. Doing so can result in leaks, overheating, explosions, electric shocks, burns, or injuries.
- When you use a completely new battery pack or a battery pack that has not been used for a long time, the charge lamp (CHARGE) may flash quickly when the battery is charged. If this happens, remove the battery pack and then re-insert it to recharge.
- We recommend charging the battery pack in an ambient temperature of between 10 °C and 30 °C (50 °F and 86 °F). The battery pack may not be correctly charged in temperatures outside this range.
- Operation cannot be guaranteed with all external power supplies.
- When charging is finished, disconnect the AC Adaptor from the wall outlet (wall socket) or disconnect the USB cable from the camera. Not doing so may result in a shorter battery life.
- Do not continuously or repeatedly charge the battery pack without using it if it is already fully charged or close to fully charged. Doing so may cause a deterioration in battery performance.
- If the product's charge lamp flashes while charging, remove the battery pack being charged, and then insert the same battery pack firmly back into the product. If the charge lamp flashes again, this may indicate a faulty battery or that a battery pack other than the specified type has been inserted. Check that the battery pack is the specified type.
  If the battery pack is the specified type, remove the battery pack, replace it with a new or different one and check that the newly inserted battery is charging correctly. If the newly inserted battery is charging correctly, the previously inserted battery may be faulty.
- If the charge lamp flashes while charging the battery pack inside the camera, this indicates that charging has stopped temporarily and is on standby. Charging stops and enters standby status automatically when the temperature is outside of the recommended operating temperature. When the temperature returns to the appropriate range, charging resumes and the charge lamp lights up again.

Remaining battery indicator

- The remaining battery indicator appears on the screen. It takes about one minute for the correct remaining battery indicator to appear.
- The correct remaining battery indicator may not be displayed under some operating or environmental conditions.
- If the remaining battery indicator does not appear on the screen, press the DISP (Display Setting) button to display it.

Effective use of the battery pack

- Battery performance decreases in low temperature environments. So in cold places, the operational time of the battery pack is shorter. To ensure longer battery pack use, we recommend putting the battery pack in your pocket close to your body to warm it up, and insert it in the product immediately before you start shooting. If there are any metal objects such as keys in your pocket, be careful of causing a short-circuit.

- The battery pack will run down quickly if you use the flash or continuous shooting function frequently, turn the power on/off frequently, or set the monitor very bright.
- We recommend preparing spare battery packs and taking trial shots before taking the actual shots.
- If the battery terminal is dirty, you may not be able to turn on the product or the battery pack may not be properly charged. In that case, clean the battery by lightly wiping off any dust using a soft cloth or a cotton swab.

How to store the battery pack

To maintain the battery pack's function, charge the battery pack and then fully discharge it in the camera at least once a year before storing it. Store the battery in a cool, dry place after removing it from the camera.

On battery life

- The battery life is limited. If you use the same battery repeatedly, or use the same battery for a long period, the battery capacity decreases gradually. If the available time of the battery is shortened significantly, it is probably time to replace the battery pack with a new one.
- The battery life varies according to how the battery pack is stored and the operating conditions and environment in which each battery pack is used.

TP1002110698

5-069-971-11(6) Copyright 2026 Sony Corporation

Notes on memory card

- If [!] (overheating warning icon) is displayed on the monitor, do not remove the memory card from the camera right away. Instead, wait for a while after turning off the camera, and then remove the memory card. If you touch the memory card while it is hot, you may drop it and the memory card may be damaged. Be careful when removing the memory card.
- If you repeatedly shoot and delete images for a long time, fragmentation of data in a file in the memory card may occur, and movie recording may be interrupted in the middle of shooting. If this happens, save your images to a computer or other storage location, then execute [Format] using this camera.
- Do not remove the battery pack or the memory card, disconnect the USB cable, or turn the camera off while the access lamp is lit up. This may cause the data on the memory card to become damaged.
- Be sure to back up the data for protection.
- Not all memory cards are guaranteed to operate correctly.
- Images recorded on an SDXC/CFexpress Type A memory card cannot be imported to or played on computers or AV devices not compatible with exFAT when connected using a USB cable. Make sure that the device is compatible with exFAT before connecting it to the camera. If you connect your camera to an incompatible device, you may be prompted to format the card. Never format the card in response to this prompt, as doing so will erase all data on the card.
  (exFAT is the file system used on SDXC memory cards or CFexpress Type A memory cards.)
- Do not expose the memory card to water.
- Do not strike, bend or drop the memory card.
- Do not use or store the memory card under the following conditions:
  - High temperature locations such as in a car parked under the sun
  - Locations exposed to direct sunlight
  - Humid locations or locations with corrosive substances present
- If the memory card is used near areas with strong magnetization, or used in locations subject to static electricity or electrical noise, the data on the memory card may become damaged.
- Do not touch the terminal section of the memory card with your hand or a metal object.
- Do not leave the memory card within the reach of small children. They might accidentally swallow it.
- Do not disassemble or modify the memory card.
- The memory card may be hot just after it has been used for a long time. Be careful when you handle it.
- Memory card formatted with a computer is not guaranteed to operate with the product. Be sure to format the memory card using this product.
- Data read/write speeds differ depending on the combination of the memory card and the equipment used.
- Do not press down hard when writing in the memo space on the memory card.
- Do not attach a label on the memory card itself nor on a memory card adaptor. You may not be able to remove the memory card.
- If the write-protect switch or delete-protect switch of an SD memory card is set to the LOCK position, you cannot record or delete images. In this case, set the switch to the record position.
- To use a microSD memory card with this product:
  - Be sure to insert the memory card into a dedicated adaptor. If you insert a memory card into the product without a memory card adaptor, you might not be able to remove it from the product.
  - When inserting a memory card into a memory card adaptor, be sure that the memory card is inserted in the correct direction and then insert it as far as it will go. If the card is not inserted properly, it may result in a malfunction.

Related Topic

- Format

TP1002134069

5-069-971-11(6) Copyright 2026 Sony Corporation

Cleaning the image sensor (Sensor Cleaning)

If dust or debris gets inside the camera and adheres to the surface of the image sensor (the part that converts the light to an electric signal), it may appear as dark spots on the image, depending on the shooting environment. If this happens, clean the image sensor quickly by following the steps below.

1. **Confirm that the battery has been charged sufficiently.**

2. **MENU → (Setup) → [Setup Option] → [Anti-dust Function] → [Sensor Cleaning] → [Enter].**

   The image sensor vibrates a little to shake off the dust.

3. **Detach the lens.**

4. **Use a commercially available blower to clean the image sensor surface and the surrounding area.**

   - Hold the camera slightly face downward so that the dust falls out.

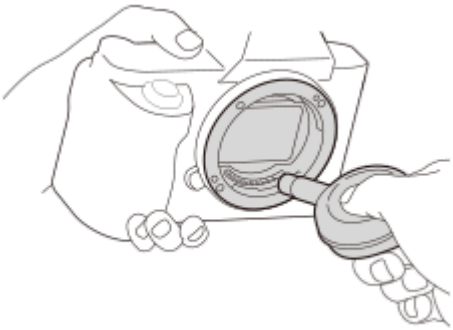

5. **Turn off the camera.**

6. **Attach the lens.**

Hint

- For how to check the amount of dust on the image sensor, and for further details on cleaning methods, please refer to the following URL.
  https://support.d-imaging.sony.co.jp/www/support/ilc/sensor/index.php

Note

- When executing the cleaning mode, remove the lens with the camera turned on.
- Do not turn off the camera during cleaning.
- Make sure that the remaining battery level is 51% or more before performing cleaning.
- To clean the image sensor with the camera turned off, set [Shutter When Pwr OFF] under [Anti-dust Function] to [Off].
- Do not use a spray type blower as it may scatter water droplets inside the camera body.

- Do not put the tip of a blower into the cavity beyond the lens mount area, so that the tip of the blower does not touch the image sensor.
- When cleaning the image sensor with a blower, do not blow too hard. If you blow the sensor too hard, the inside of the product may be damaged.
- If the dust remains even after you cleaned the product as described, consult the service facility.
- During cleaning, the image sensor emits a vibrating noise. This is not a malfunction.
- Cleaning may be performed automatically when the power is turned off.

Related Topic

- Attaching/removing a lens
- Anti-dust Function

TP1002110639

5-069-971-11(6) Copyright 2026 Sony Corporation

On cleaning

Cleaning the lens

- Do not use a cleaning solution containing organic solvents, such as thinner, or benzine.
- When cleaning the lens surface, remove dust with a commercially available blower. In case of dust that sticks to the surface, wipe it off with a soft cloth or tissue paper slightly moistened with lens cleaning solution. Wipe in a spiral pattern from the center to the outside. Do not spray lens cleaning solution directly onto the lens surface.

Cleaning the camera body

Do not touch the parts of the product inside the lens mount, such as a lens signal contact. To clean inside the lens mount, use a commercially available blower* to blow any dust off.

* Do not use a spray-type blower as doing so may cause a malfunction.

Cleaning the product surface

Clean the product surface with a soft cloth slightly moistened with water, then wipe the surface with a dry cloth. To prevent damage to the finish or casing:

- Do not expose the product to chemical products such as thinner, benzine, alcohol, disposable cloths, insect repellent, sunscreen or insecticide.
- Do not touch the product with any of the above on your hand.
- Do not leave the product in contact with rubber or vinyl for a long time.

Cleaning the monitor

- If you wipe the monitor firmly using tissue paper, etc., the monitor may be scratched.
- If the monitor becomes dirty with fingerprints or dust, gently remove the dust from the surface, and then clean the monitor using soft cloth, etc.

TP1002110701

5-069-971-11(6) Copyright 2026 Sony Corporation

Checking the camera and the supplied items

The number in parentheses indicates the number of pieces.

- Camera (1)
- NP-FZ100 Rechargeable Battery Pack (1)

- Shoulder Strap (1)

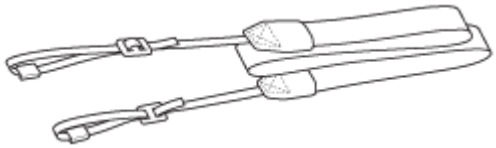

- Body Cap (1) (Attached to the camera)

- Shoe Cap (1) (Attached to the camera)

- Eyepiece Cup (1) (Attached to the camera)

- Startup Guide (1)
- Reference Guide (1)

Accessories may differ depending on the country or region. Please check the Startup Guide for details on accessories.

TP1002161086

5-069-971-11(6) Copyright 2026 Sony Corporation

Interchangeable Lens Digital Camera
ILCE-7M5 α7V

Front side

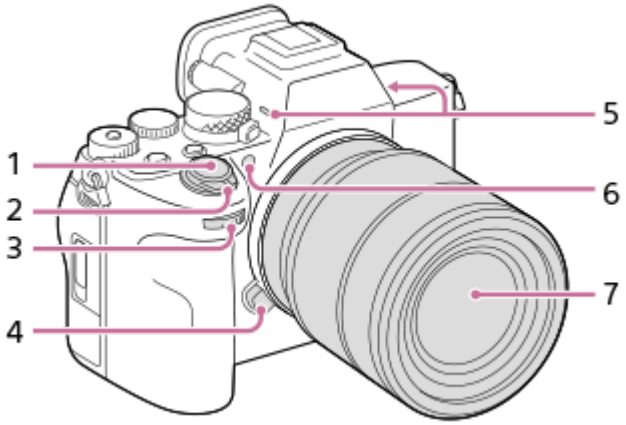

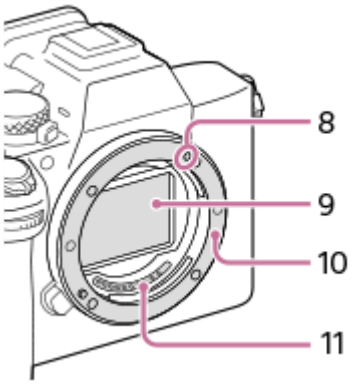

1. Shutter button
2. ON/OFF (Power) switch
3. Front dial
   You can quickly adjust the settings for each shooting mode.

4. Lens release button
5. Microphone
   Do not cover this part during movie recording. Doing so may cause noise or lower the volume.

6. AF illuminator/Self-timer lamp
   Do not cover this part during shooting.

7. Lens
8. Mounting index
9. Image sensor*
10. Mount
11. Lens contacts*

* Do not directly touch these parts.

Related Topic

- Rear side

- Top side
- Sides
- Bottom

TP1002161087

5-069-971-11(6) Copyright 2026 Sony Corporation

Rear side

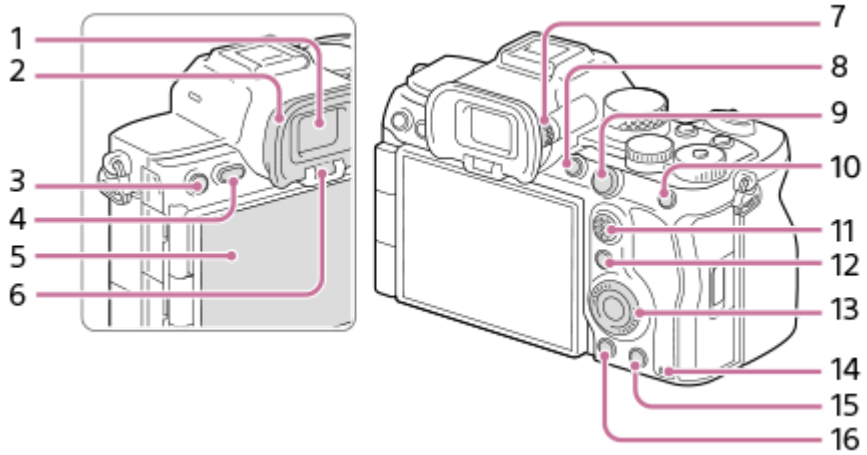

1. Viewfinder
2. Eyepiece Cup

To remove the eyepiece cup

Push the grips at the bottom of the eyepiece cup to the left and right and lift up the cup.

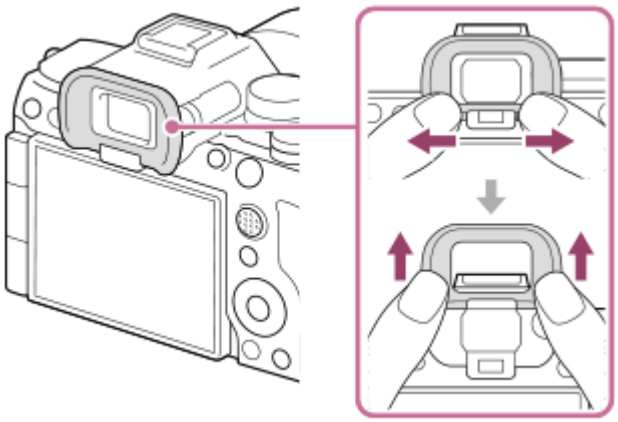

3. For shooting: C3 button (Custom button 3)
   For viewing: (Protect) button
4. MENU button
5. Monitor (For touch operation: Touch panel/Touch pad)
   You can adjust the monitor to an easily viewable angle and shoot from any position. For details, see “Adjusting the monitor angle.”

   - You may not be able to adjust the monitor angle depending on the type of a tripod you use. In such a case, release the tripod screw once to adjust the monitor angle.
   - Do not apply excessive force when opening, closing, or rotating the monitor. Doing so may cause a malfunction.

6. Eye sensor
7. Diopter-adjustment dial
   Adjust the diopter-adjustment dial according to your eyesight until the display appears clearly in the viewfinder. If it is hard to operate the diopter-adjustment dial, remove the eyepiece cup before operating the dial.

8. C1 button (Custom button 1)
9. For shooting: AF-ON (AF On) button
   For viewing: (Enlarge) button
10. For shooting: AEL button
    [AEL hold] is assigned to the AEL button in the default settings.
    For viewing: (Image index) button
11. Multi-selector
12. Fn (Function) button
13. Control wheel
14. Access lamp
15. For shooting: C4 button (Custom button 4)
    For viewing: (Delete) button
16. (Playback) button

Adjusting the monitor angle

- When holding the camera in the high or low position, pull the monitor toward you to adjust the angle.

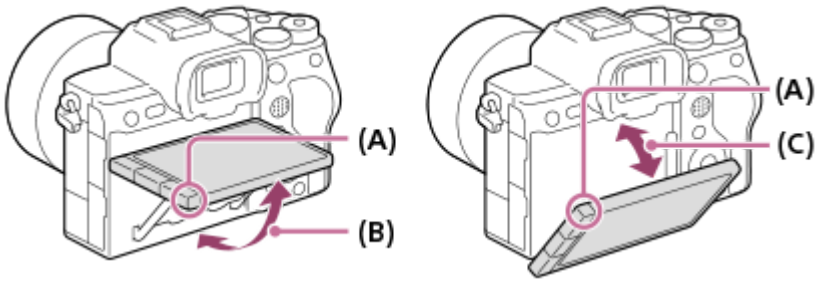

(A): Where to place your fingers
(B): Approx. 98° from the rear surface of the camera
(C): Approx. 40° from the rear surface of the camera

- In the self-portrait position with the monitor open sideways and the lens facing toward you, the monitor image is flipped horizontally. Rotate the monitor backwards to cancel the flipped display.

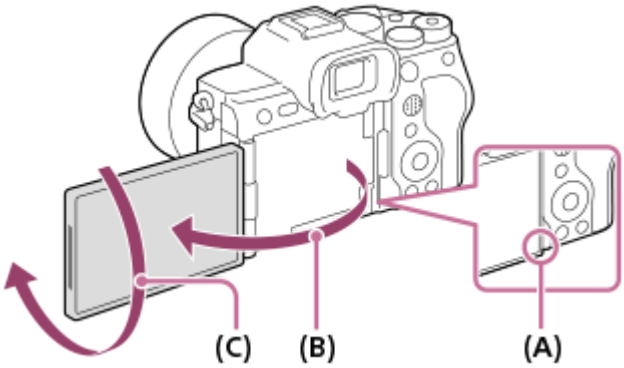

(A): Where to place your fingers
(B): Approx. 180°
(C): Approx. 270°

- When you want to switch the display orientation to the self-portrait mode with the monitor pulled out, rotate the monitor all the way in the direction of (A). If you want to cancel the display orientation for the self-portrait mode, rotate the monitor all the way in the direction of (B) (when [Monitor Flip Direction] is set to [Auto]).

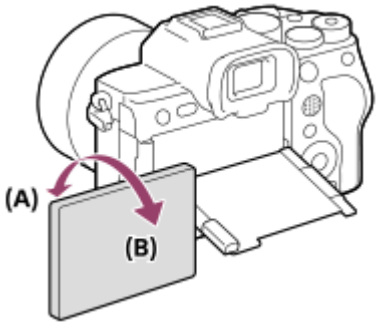

- In the default settings, the inversion of the display is automatically switched on and off depending on how the monitor is positioned. You can lock the display method with the following settings: MENU → (Setup) → [Finder/Monitor] → [Monitor Flip Direction].

Related Topic

- Front side
- Top side
- Sides
- Bottom

TP1002161088

5-069-971-11(6) Copyright 2026 Sony Corporation

Top side

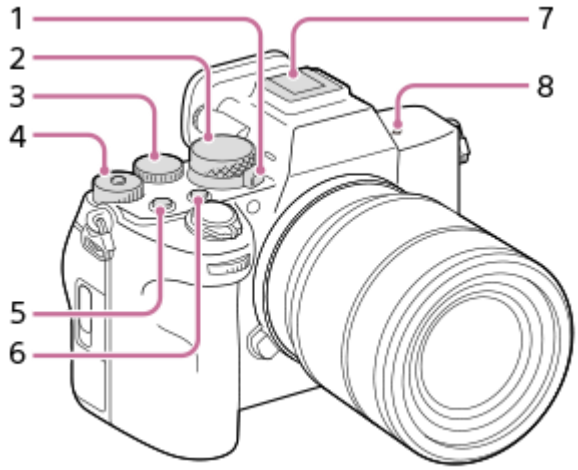

1. Still/Movie/S&Q dial
   You can switch the shooting mode.
   Turn the Still/Movie/S&Q dial while pressing the lock release button on the front of the dial.

2. Mode dial
3. Rear dial L
   You can quickly adjust the settings for each shooting mode.

4. Rear dial R
   You can quickly adjust the settings for each shooting mode.
   Pressing the lock button at the center switches the dial between the locked and unlocked status. The dial is unlocked when the lock button is popped up and the white line is visible.

5. MOVIE (Movie) button
6. C2 button (Custom button 2)
7. Multi Interface Shoe*
   Some accessories may not go in all the way and protrude backward from the Multi interface shoe. However, when the accessory reaches the front end of the shoe, the connection is completed.

8. Image sensor position mark
   - The image sensor is the sensor that converts light into an electric signal. The position of the image sensor is indicated by (Image sensor position mark). When you measure the exact distance between the camera and the subject, refer to the position of the horizontal line.

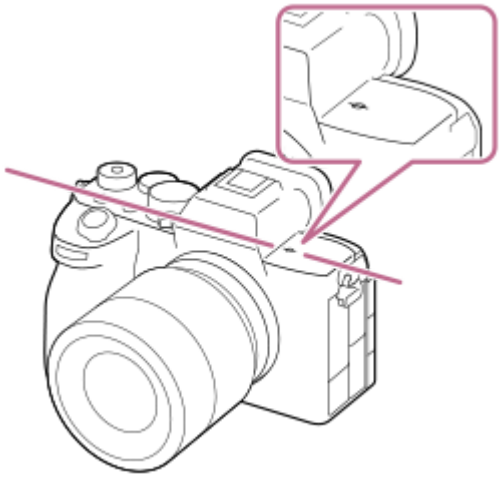

- If the subject is closer than the minimum shooting distance of the lens, the focus cannot be confirmed. Make sure you put enough distance between the subject and the camera.

* For details on compatible accessories for the Multi Interface Shoe, visit the Sony website, or consult your Sony dealer or local authorized Sony service facility.
Accessories for the Accessory Shoe can also be used. Operations with other manufacturers' accessories are not guaranteed.

Multi Interface Shoe

Accessory Shoe

Related Topic

- Front side
- Rear side
- Sides
- Bottom

TP1002161089

5-069-971-11(6) Copyright 2026 Sony Corporation

Interchangeable Lens Digital Camera
ILCE-7M5 α7V

Sides

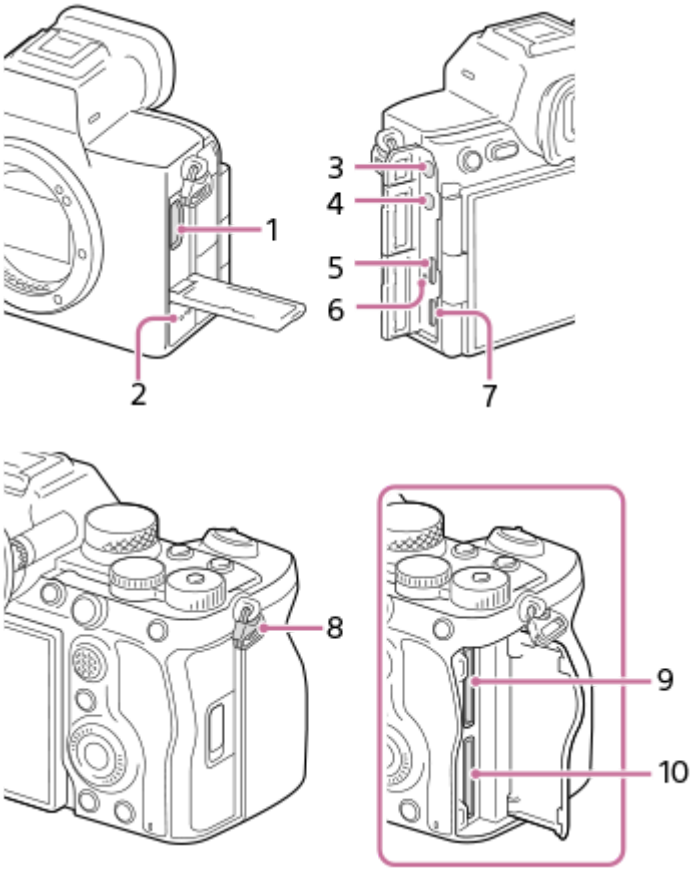

1. HDMI type A jack
2. Speaker
3. (Microphone) jack
   When an external microphone is connected, the built-in microphone turns off automatically. When the external microphone is a plugin-power type, the power of the microphone is supplied by the camera.

4. (Headphones) jack
5. USB Type-C® terminal (USB PORT 1)
6. Charge lamp
7. USB Type-C terminal (USB PORT 2)
8. Hooks for shoulder strap
   Attach both ends of the strap onto the camera.

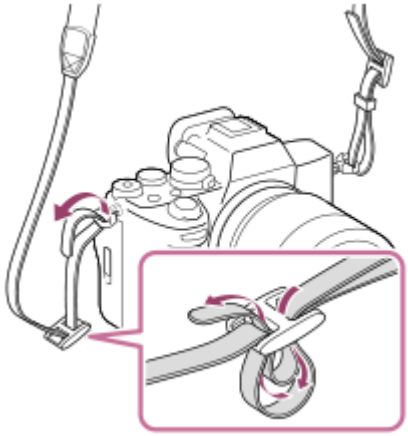

9. SLOT 1 (Memory card slot 1)
10. SLOT 2 (Memory card slot 2)

Notes on USB terminals

- Only the USB Type-C terminal of USB PORT 1 supports SuperSpeed USB 10 Gbps (USB 3.2). It is recommended to use USB PORT 1 when connecting the camera to a device such as a computer.
  You can also connect the camera to a device such as a computer using USB PORT 2, but USB communication will be Hi-Speed USB 480 Mbps (USB 2.0) communication.
- You can use either of the USB Type-C terminals, USB PORT 1 or USB PORT 2, for power supply or charging. The charging time is the same regardless of which terminal you use.
- USB communication and power supply can be performed simultaneously by using two USB Type-C terminals. In this case, use USB PORT 1 for USB communication and USB PORT 2 for power supply.

Notes on the terminal cover

Ensure that the terminal cover is closed before use.

Related Topic

- Front side
- Rear side
- Top side
- Bottom

TP1002161090

5-069-971-11(6) Copyright 2026 Sony Corporation

Bottom

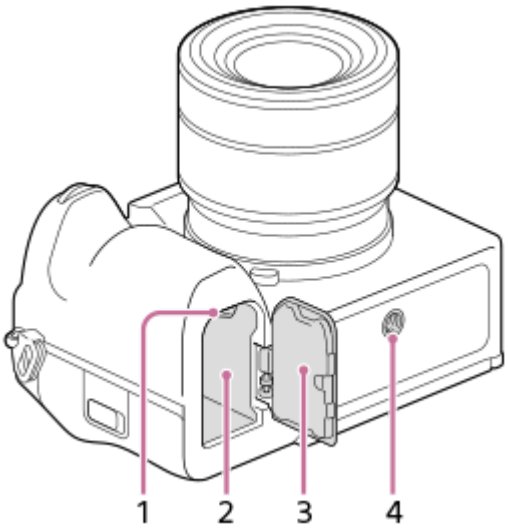

1. Lock lever
2. Battery insertion slot
3. Battery cover
   When attaching an accessory such as a vertical grip (sold separately), remove the battery cover.

To remove the battery cover

Pull the battery cover release lever (A) in the direction of the arrow, and then remove the battery cover.

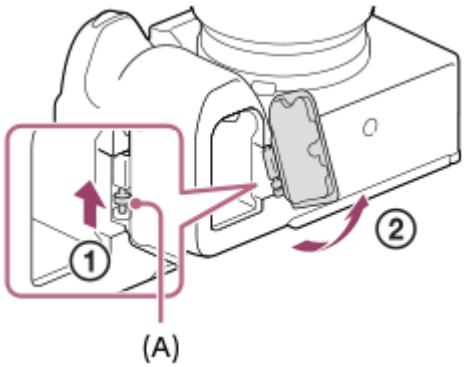

To attach the battery cover

Insert the shaft on one side of the battery cover into the attachment site, and then push in the battery cover by attaching the shaft on the opposite side.

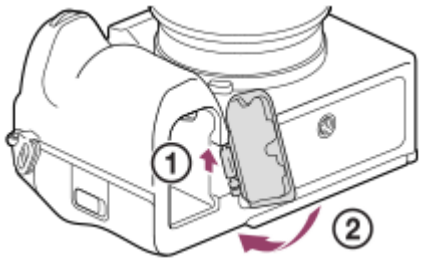

4. Tripod socket hole
   Supports 1/4-20 UNC screws
   Use a tripod with a screw less than 5.5 mm (7/32 inches) long. Otherwise, you cannot firmly secure the camera, and damage to the camera may occur.

Related Topic

- Front side
- Rear side
- Top side
- Sides

TP1002161091

5-069-971-11(6) Copyright 2026 Sony Corporation

Interchangeable Lens Digital Camera
ILCE-7M5 α7V

Basic icons displayed on the monitor

This section describes the screen display when the shooting mode is P (Program Auto).

- The following is an example of the display when the screen display is set to [Display All Info.] and the touch function icons are hidden.
- The displayed content and positions are for reference only, and may differ from the actual display. Some icons may not be displayed depending on the camera settings.
- For information on how to show/hide the touch function icons and examples of the touch function icon display, refer to "Touch function icons."

During still image shooting

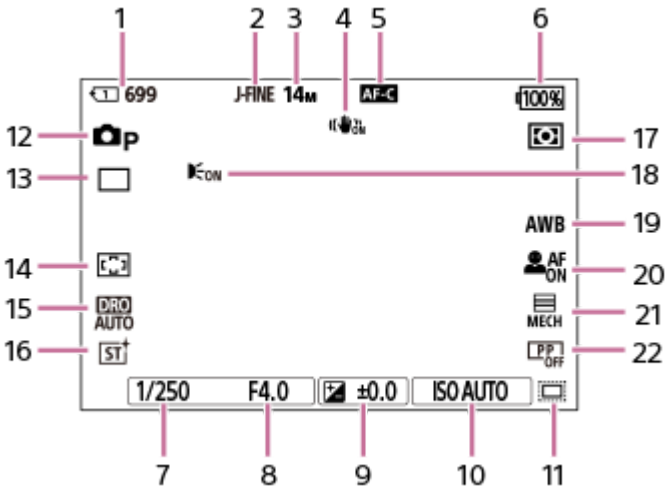

Display when holding the camera vertically

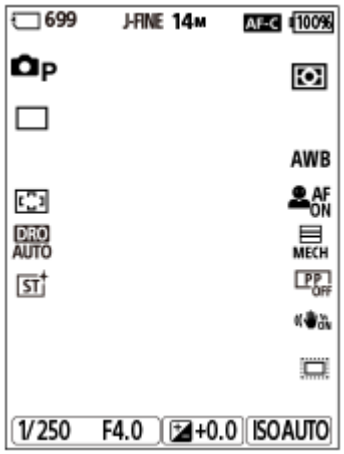

1. Slot number of the memory card recording the shooting data and recordable number of still images
2. [JPEG/HEIF Switch] is set to [JPEG]. [JPEG Quality] is set to [Fine].
3. [JPEG Image Size] is set to [M: 14M].
4. [SteadyShot] is set to [On].
5. The focus mode is set to [Continuous AF].
6. Remaining battery level
7. Shutter speed
8. Aperture value

9. Exposure compensation
10. [ISO] is set to [ISO AUTO].
11. [APS-C S35 Shooting] is set to [On] or [Auto], and the recordable area is the APS-C-equivalent size.
12. The mode dial is set to P (Program Auto).
13. [Drive Mode] is set to [Single Shooting].
14. [Focus Area] is set to [Wide].
15. [D-Range Optimizer: Auto] is selected.
16. [Creative Look] is set to [ST(Standard)].
17. [Metering Mode] is set to [Multi].
18. Displayed when [AF Illuminator] is set to [Auto] and the camera detects that the AF Illuminator is required.
19. [White Balance] is set to [Auto].
20. [Subject Recog in AF] is set to [On] and [Recognition Target] is set to [Human].
21. [Shutter Type] is set to [Mechanical Shutter].
22. [Picture Profile] is set to [Off].

During movie recording

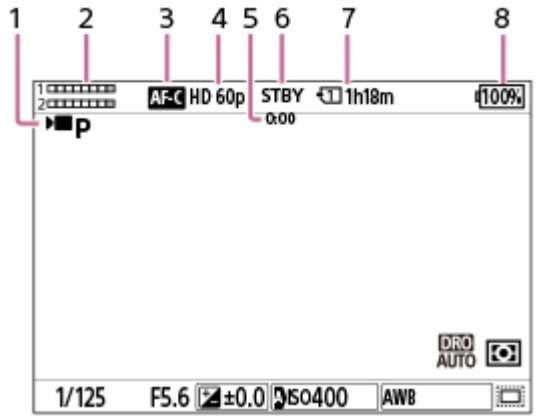

Display when holding the camera vertically

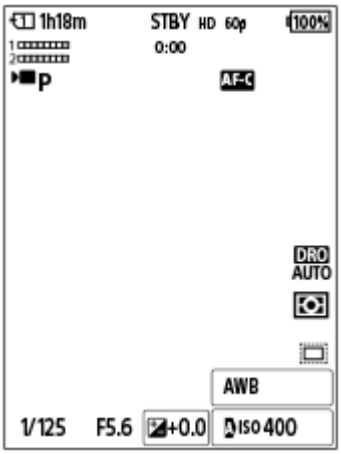

1. The mode dial is set to P (Program Auto).
2. Audio level
3. The focus mode is set to [Continuous AF].
4. [File Format] is set to [XAVC S HD] and [Rec Frame Rate] is set to [60p].
5. Actual shooting time of the movie
6. The camera is in the shooting standby mode.
7. Slot number of the memory card recording the shooting data and recordable movie time
8. Remaining battery level

Related Topic

- Touch function icons

- List of icons on the screen for shooting still images
- List of icons on the screen for shooting movies
- List of icons on the playback screen

TP1002161092

5-069-971-11(6) Copyright 2026 Sony Corporation

Interchangeable Lens Digital Camera
ILCE-7M5 α7V

Touch function icons

Some functions have icons for touch operations (touch function icons). You can execute or change the settings of the functions by touching the icons.

Settings for using the touch function icons

- [Touch Operation]: [On]
- [Shooting Screen] under [Touch Panel Settings]:
  - Set [Shooting Screen] to [On].
  - [Swipe Right] or [Swipe Left] → desired setting.

To show/hide the touch function icons

Swipe right or left on the shooting standby screen. The touch function icons will appear on the left and right sides of the screen according to the settings for [Swipe Right] and [Swipe Left] under [Shooting Screen].
To hide the touch function icons, swipe the screen in the opposite direction from when you made the icons appear.

Examples of the touch function icon display and functions of each icon

The examples show the display when you set the icons to appear on both the left and right sides.
During still image shooting

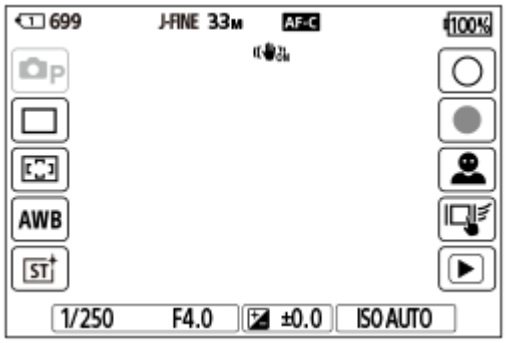

Icons on the left side: Shoot Mode, Drive Mode, Focus Area, White Balance, Creative Look
Icons on the right side: Shoots a still image, starts recording movies, Recog. Target Select, Touch Func. in Shooting, switches to the playback screen*

* The shot mark button is displayed even during movie recording in the still image shooting mode so that shot marks can be set for the movie being recorded.

During movie recording

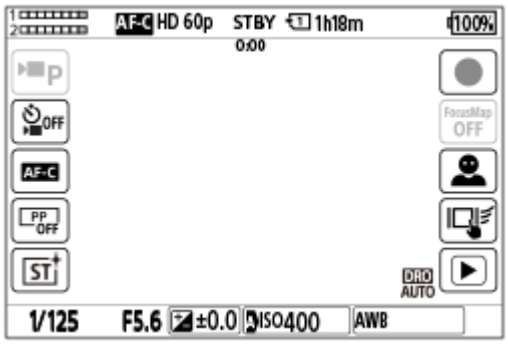

Icons on the left side: Shoot Mode, Self-timer, Focus Mode, Picture Profile, Creative Look
Icons on the right side: Starts recording movies, Focus Map, Recog. Target Select, Touch Func. in Shooting, switches to the playback screen*

* The shot mark button is displayed during movie recording so that shot marks can be set for the movie being recorded.

Hint

- When MENU → (Setup) → [Touch Operation] → [Touch Panel Settings] → [Playback Screen] is set to [On], the touch function icons on the playback screen are always displayed.
- If you set MENU → (Setup) →[Touch Operation] → [Touch Panel Settings] → [Shooting Screen] → [Icon When Monitor Flipped] to [Flip], you can set whether to switch the left and right icons on the shooting screen when the monitor is flipped.

Related Topic

- Touch Panel Settings
- Shooting still images (Intelligent Auto)
- Shooting movies (Intelligent Auto)
- Intelligent Auto
- Drive Mode
- Selecting the focus area (Focus Area)
- White Balance (still image/movie)
- Creative Look (still image/movie)
- Recognition Target (still image/movie)
- Playing back still images
- Self-timer (movie)
- Picture Profile (still image/movie)
- Focus Map
- Playing back movies

TP1002156917

5-069-971-11(6) Copyright 2026 Sony Corporation

Interchangeable Lens Digital Camera
ILCE-7M5 α7V

FE 28-70mm F3.5-5.6 OSS II

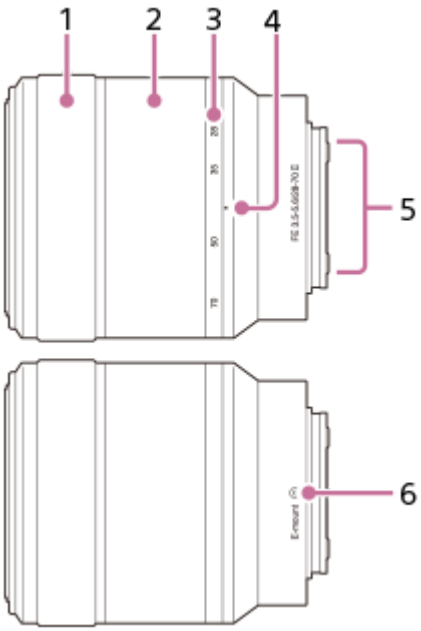

1. Focusing ring
2. Zooming ring
3. Focal-length scale
4. Focal-length index
5. Lens contacts*
6. Mounting index

* Do not touch this part directly.

Specifications

Focal length: 28 mm – 70 mm
35mm equivalent focal length[*1]: 42 mm – 105 mm
Lens groups-elements: 8 – 9
Angle of view 1[*2]: 75° – 34°
Angle of view 2[*2]: 54° – 23°
Minimum focus[*3]: 0.3 m – 0.45 m (0.99 ft – 1.48 ft)
Maximum magnification: 0.19×
Minimum aperture: f/22 – f/36
Filter diameter: 55 mm
Dimensions (max. diameter × height) : Approx. 72.5 mm × 83 mm (Approx. 2 7/8 inches × 3 3/8 inches)
Mass: Approx. 293 g (Approx. 10.4 oz.)
SteadyShot: Available

*1 This is the equivalent focal length in 35mm format when mounted on an Interchangeable Lens Digital Camera equipped with an APS-C sized image sensor.
*2 Angle of view 1 is the value for 35mm cameras, and angle of view 2 is the value for Interchangeable Lens Digital Cameras equipped with an APS-C sized image sensor.
*3 Minimum focus is the distance from the image sensor to the subject.

Supplied items

Lens (1), Front Lens Cap (1), Rear Lens Cap (1), Lens hood (1)

Note

- This lens is only supplied with lens-kit models. The release status of lens-kit models may vary among countries and regions.

TP1002161243

5-069-971-11(6) Copyright 2026 Sony Corporation

Touch panel

By touching the monitor, you can intuitively perform operations such as focusing on the shooting screen and operating the playback screen. You can also use swipe gestures to control whether the Fn menu, touch icons, etc. are displayed or hidden.

Touch operations during shooting

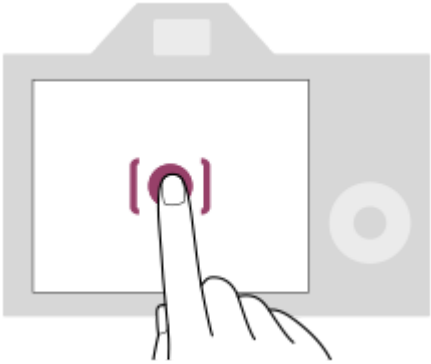

Touch the monitor to specify where to focus (Touch Focus).
Touch a subject on the monitor to use the touch tracking function (Touch Tracking).
You can also focus on a subject and shoot images simply by touching the subject on the screen (Touch Shutter).
When you touch the subject on the screen, the camera adjusts the brightness automatically according to the subject (Touch AE). [Touch AE] can also be used in combination with [Touch Focus], [Touch Tracking], or [Touch Shutter].

For information on how to switch the function activated by touch operation, refer to “ Touch Panel Settings .”

Touch operations during playback

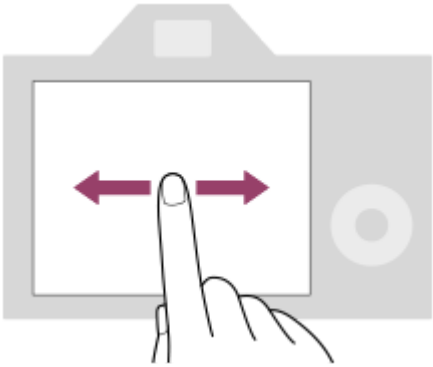

During single-image playback, swipe the screen to the left or right to move to the previous or next image.

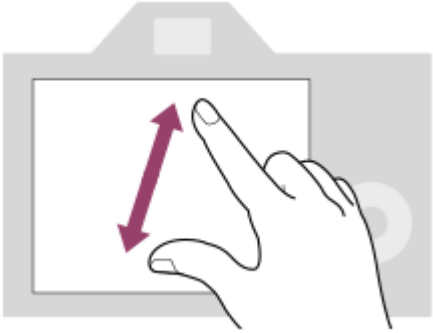

During single-image playback, you can enlarge or reduce the displayed image by moving apart or bringing together two fingers on the screen (pinch-out/pinch-in).

- You can also double-tap the monitor to enlarge a still image or exit the enlarged image.
- During movie playback, you can start or pause playback using touch operations.

Swipe to control the screen

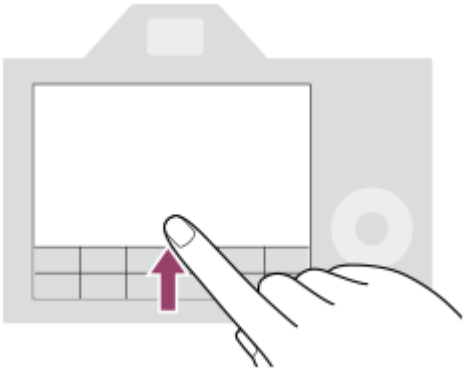

You can open the function menu by swiping upward quickly on the shooting screen or playback screen.

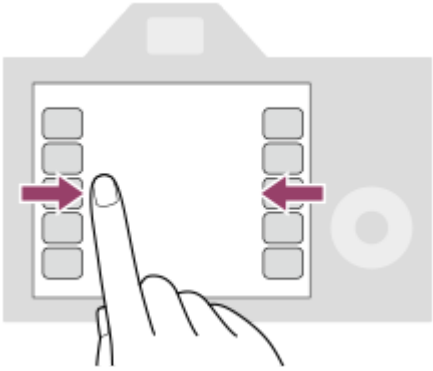

You can show and hide the icons for functions displayed on the left and right sides of the screen by swiping left and right quickly on the shooting screen.

Hint

- You can also operate the camera by touching the guides displayed on the bottom of the screen (Except when in the [Intelligent Auto] mode).
- You can set whether to enable touch operations and configure detailed settings under [Touch Panel Settings].

Related Topic

- Touch Operation
- Touch Panel/Pad
- Touch Panel Settings
- Focusing using touch operations (Touch Focus)
- Starting tracking with touch operations (Touch Tracking)
- Shooting with touch operations (Touch Shutter)
- Adjusting the exposure with touch operations (Touch AE)
- Fn (function) button
- Touch function icons

TP1002151138

5-069-971-11(6) Copyright 2026 Sony Corporation

Interchangeable Lens Digital Camera
ILCE-7M5 α7V

Touch function icons

Some functions have icons for touch operations (touch function icons). You can execute or change the settings of the functions by touching the icons.

Settings for using the touch function icons

- [Touch Operation]: [On]
- [Shooting Screen] under [Touch Panel Settings]:
  - Set [Shooting Screen] to [On].
  - [Swipe Right] or [Swipe Left] → desired setting.

To show/hide the touch function icons

Swipe right or left on the shooting standby screen. The touch function icons will appear on the left and right sides of the screen according to the settings for [Swipe Right] and [Swipe Left] under [Shooting Screen].
To hide the touch function icons, swipe the screen in the opposite direction from when you made the icons appear.

Examples of the touch function icon display and functions of each icon

The examples show the display when you set the icons to appear on both the left and right sides.
During still image shooting

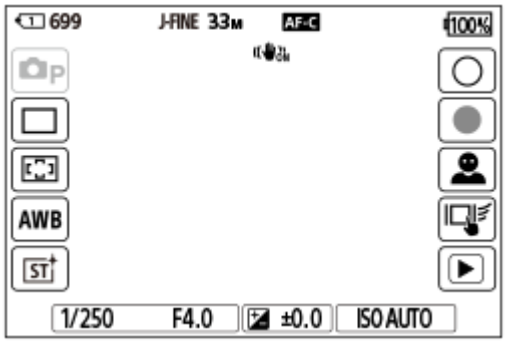

Icons on the left side: Shoot Mode, Drive Mode, Focus Area, White Balance, Creative Look
Icons on the right side: Shoots a still image, starts recording movies, Recog. Target Select, Touch Func. in Shooting, switches to the playback screen*

* The shot mark button is displayed even during movie recording in the still image shooting mode so that shot marks can be set for the movie being recorded.

During movie recording

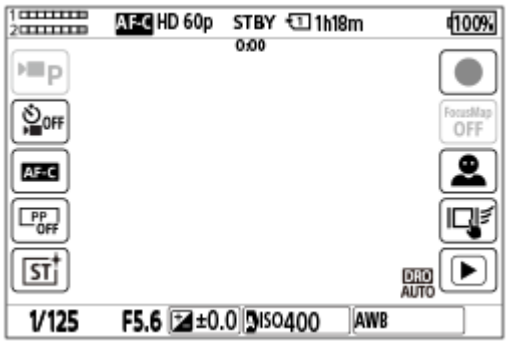

Icons on the left side: Shoot Mode, Self-timer, Focus Mode, Picture Profile, Creative Look
Icons on the right side: Starts recording movies, Focus Map, Recog. Target Select, Touch Func. in Shooting, switches to the playback screen*

* The shot mark button is displayed during movie recording so that shot marks can be set for the movie being recorded.

Hint

- When MENU → (Setup) → [Touch Operation] → [Touch Panel Settings] → [Playback Screen] is set to [On], the touch function icons on the playback screen are always displayed.
- If you set MENU → (Setup) →[Touch Operation] → [Touch Panel Settings] → [Shooting Screen] → [Icon When Monitor Flipped] to [Flip], you can set whether to switch the left and right icons on the shooting screen when the monitor is flipped.

Related Topic

- Touch Panel Settings
- Shooting still images (Intelligent Auto)
- Shooting movies (Intelligent Auto)
- Intelligent Auto
- Drive Mode
- Selecting the focus area (Focus Area)
- White Balance (still image/movie)
- Creative Look (still image/movie)
- Recognition Target (still image/movie)
- Playing back still images
- Self-timer (movie)
- Picture Profile (still image/movie)
- Focus Map
- Playing back movies

TP1002156917

5-069-971-11(6) Copyright 2026 Sony Corporation

Control wheel

On the menu screen or the screen displayed by pressing the Fn button, you can move the selection frame by turning the control wheel or by pressing the top/bottom/left/right side of the control wheel. Your selection is confirmed when you press the center of the control wheel.

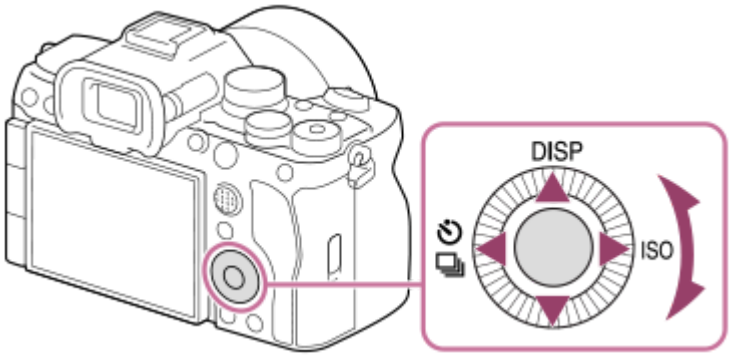

- The DISP (Display Setting), / (Drive Mode/ Self-timer), and ISO (ISO) functions are assigned to the top/left/right side of the control wheel. In addition, you can assign selected functions to the left/right/bottom side and the center of the control wheel, and to the rotation of the control wheel.
- During playback, you can display the next/previous image by pressing the right/left side of the control wheel or by turning the control wheel.
- During vertical display, the movement directions of the top/bottom/left/right side of the control wheel are also rotated to match the orientation of the monitor so that intuitive operation is possible. The functions assigned to the top/bottom/left/right side of the control wheel using [Custom Key/Dial Set.] or [Custom Key/Dial Set.] will not rotate during vertical display.

Related Topic

- Assigning frequently used functions to buttons and dials (Custom Key/Dial Set.)
- Changing the function of the dial temporarily (My Dial Settings)

TP1002133961

5-069-971-11(6) Copyright 2026 Sony Corporation

Multi-selector

You can move the focus area by pushing the multi-selector up/down/left/right. You can also assign a function to be activated when you press the center of the multi-selector.

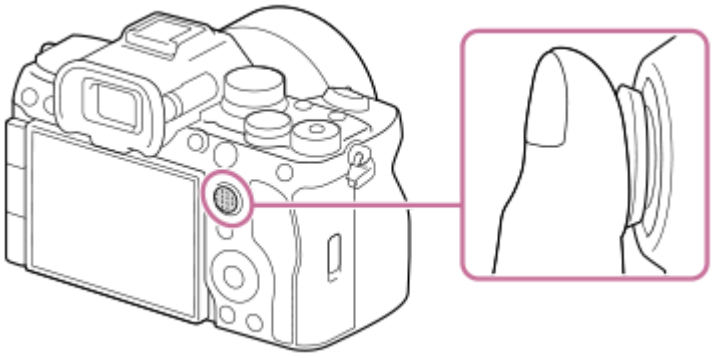

- Put your finger right on top of the multi-selector to manipulate it more precisely.
- You can move the focus area when [Focus Area] is set to the following parameters:
  - [Zone]
  - [Spot: XL] / [Spot: L] / [Spot: M] / [Spot: S] / [Spot: XS]
  - [Expand Spot]
  - [Custom 1] - [Custom 3]
  - [Tracking: Zone]
  - [Tracking: Spot XL] / [Tracking: Spot L] / [Tracking: Spot M] / [Tracking: Spot S] / [Tracking: Spot XS]
  - [Tracking: Expand Spot]
  - [Tracking: Custom 1] - [Tracking: Custom 3]
- The [Focus Standard] function is assigned to the center of the multi-selector in the default settings.

Related Topic

- Selecting the focus area (Focus Area)
- Focus Standard

TP1002142854

5-069-971-11(6) Copyright 2026 Sony Corporation

Interchangeable Lens Digital Camera
ILCE-7M5 α7V

Still/Movie/S&Q dial and mode dial

You can use the Still/Movie/S&Q dial and mode dial to select a shooting mode according to the subject and purpose of shooting.

Still/Movie/S&Q dial

Use the Still/Movie/S&Q dial to select a shooting mode.

- Turn the Still/Movie/S&Q dial while pressing the lock release button on the front of the Still/Movie/S&Q dial.

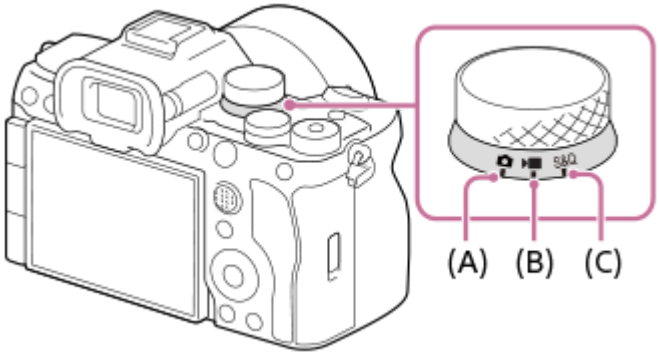

(A) Still image shooting mode
(B) Movie recording mode
(C) Slow-motion/quick-motion shooting mode

Hint

- The displayed menu items vary depending on the Still/Movie/S&Q dial position.
- When shooting a time-lapse movie, set the Still/Movie/S&Q dial to S&Q, and select [Time-lapse].

Mode dial

The exposure mode you select determines how the aperture (F value) and shutter speed are adjusted.

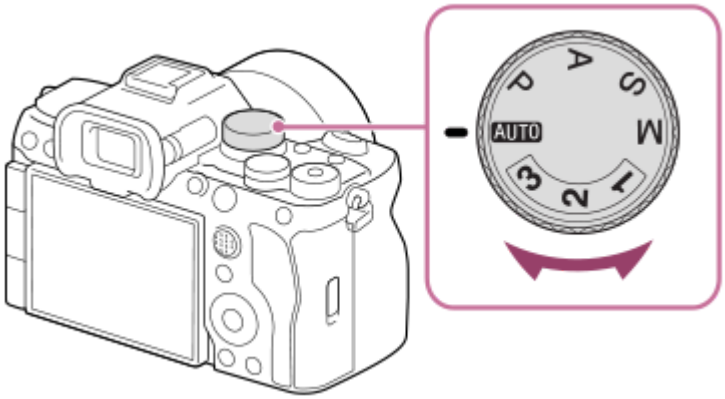

Mode dial	Exposure mode	Description
AUTO (Auto)	Intelligent Auto	The camera shoots with automatic scene recognition (Intelligent Auto).
P	Program Auto	Allows you to shoot with the exposure adjusted automatically (both the shutter speed and the aperture value). You can set shooting functions such as [ISO] .
A	Aperture Priority	The aperture value is given priority and the shutter speed is adjusted automatically. Select this when you want to blur the background or focus on the entire screen.
S	Shutter Priority	The shutter speed is given priority and the aperture value is adjusted automatically. Select this when you want to shoot a fast-moving subject without blurring, or when you want to shoot a water or light trail.
M	Manual Exposure	Manually adjust both the aperture value and shutter speed. You can shoot with your favorite exposure.
1 / 2 / 3	MR Recall Camera Setting	You can call up frequently used modes and numerical value settings that have been registered* in advance then shoot the images. * In [MR Camera Set. Memory], you can register various shooting settings, such as the exposure mode (P/A/S/M), aperture (F value), and shutter speed.

The method for setting the exposure in the movie recording modes depends on the MENU → (Shooting) → [Shooting Mode] → [Exposure Ctrl Type] setting.

When [Exposure Ctrl Type] is set to [P/A/S/M Mode]:

Select the desired exposure mode using the mode dial.

When [Exposure Ctrl Type] is set to [Flexible Exp. Mode]:

The aperture value, shutter speed, and ISO sensitivity can be switched between the automatic setting and manual setting by using the following functions assigned to custom keys.

- Aperture value
  [L.PressAv Auto/Manual]
- Shutter speed
  [L.PressTv Auto/Manual]
- ISO sensitivity
  [L.PressISO Auto/Manual]

If you select the manual setting, turn the front dial, rear dial L, or control wheel and set the desired value.

Hint

- If you are having difficulty operating the mode dial, you can change the shooting mode using menu operations by selecting [Set with Menu] for [Shooting Mode Dial] under [Mode Dial Control Set].

Related Topic

- Shooting still images (Intelligent Auto)
- Shooting movies (Intelligent Auto)
- S&Q Settings
- Intelligent Auto
- Program Auto
- Aperture Priority
- Shutter Priority

- Manual Exposure
- Exposure Ctrl Type
- Recall Camera Setting
- Camera Set. Memory
- MENU button
- Mode Dial Control Set

TP1002153936

5-069-971-11(6) Copyright 2026 Sony Corporation

Interchangeable Lens Digital Camera
ILCE-7M5 α7V

MENU button

The menu screen is displayed by pressing the MENU button. You can change settings related to all of the camera operations including shooting and playback, or you can execute a function from the menu screen.

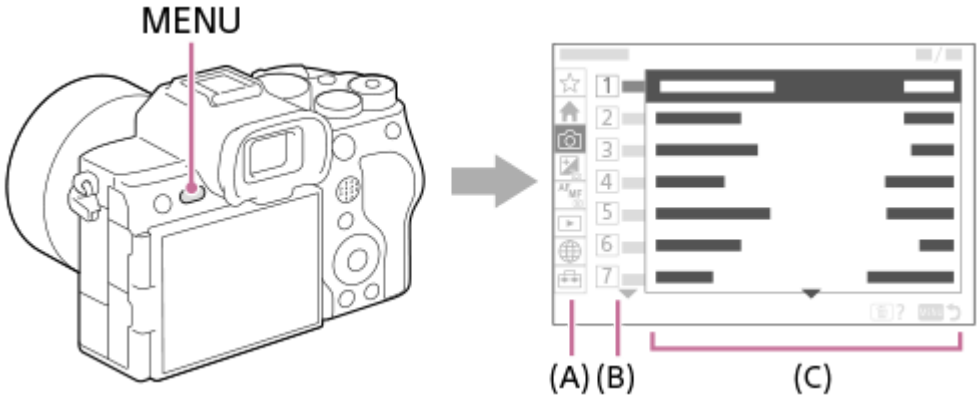

(A) Menu tab

Menu tabs are categorized by usage scenario, such as shooting, playback, network settings, etc.

(B) Menu group

In each tab, menu items are grouped by function.
The number assigned to the group is the serial number in the tab. Refer to the number to determine the location of the group in use.

(C) Menu item

Select the function you want to set or execute.

Hint

- The name of the selected tab or group is displayed at the top of the screen.
- When [Touch Operation] is set to [On] and [Menu Screen] under [Touch Panel Settings] is set to [On], touch operations on the menu screen are possible.

Basic operations on the menu screen

1. Press the MENU button to display the menu screen.
2. Move within the menu tree and find the desired menu item by pressing the top/bottom/left/right side of the control wheel.
   - The displayed menu items differ between the still image shooting modes and movie recording modes.

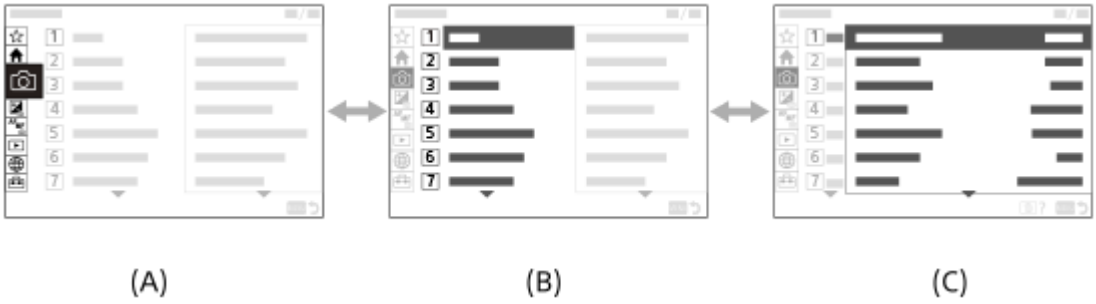

(A) Menu tabs
(B) Menu groups
(C) Menu items

3. Press the center of the control wheel to select the menu item.
   The setting screen or execution screen for the selected item will appear on the monitor.

4. Select a parameter or execute the function.
   - If you want to cancel changing the parameter, press the MENU button and go back to the previous screen.

5. Press the MENU button to exit the menu screen.
   You will return to the shooting screen or playback screen.

Hint

- In the (Main) tab, you can view a list of the current shooting settings. Select a setting value in the tab to open the corresponding menu item and change the setting value.
- You can display the menu screen by assigning the [MENU] function to a custom key using [Custom Key/Dial Set.] or [Custom Key/Dial Set.], and then pressing that key.

Relationship between the Still/Movie/S&Q dial and menu screen

The menu groups and menu items displayed in the [Main], [Shooting], [Exposure/Color], and [Focus] tabs vary depending on the Still/Movie/S&Q dial position.

- The displayed menu groups and menu items are the same in the movie recording modes and the slow-motion/quick-motion shooting modes.

Still image shooting modes

- Menu items for shooting still images are displayed.*

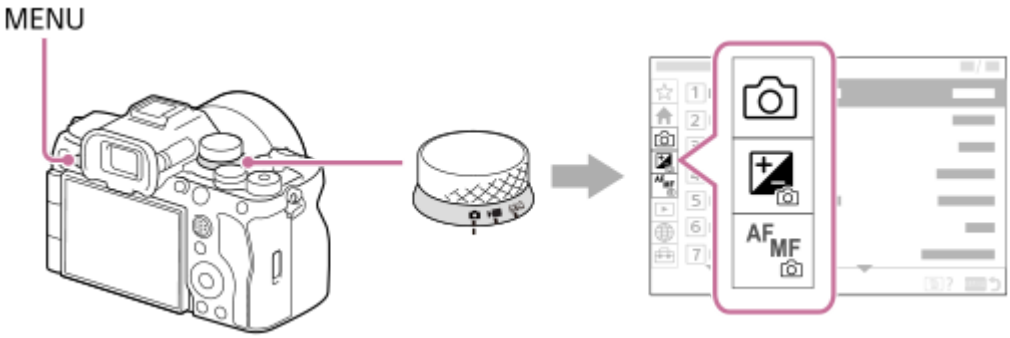

* Since you can record movies with the MOVIE (Movie) button even in the still image shooting mode, some basic movie menu items are also displayed.

Movie recording modes/Slow-motion and quick-motion shooting modes

- Menu items for recording movies are displayed.

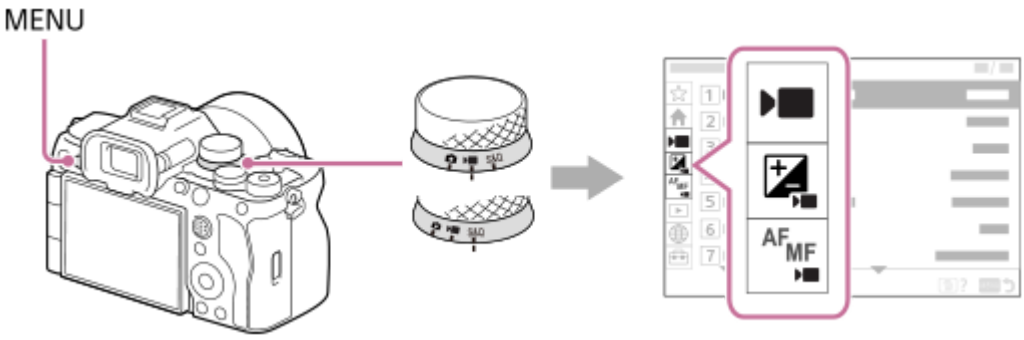

Notification badge

- If newer camera software is available, a red notification badge will appear over the (Setup) tab, [Setup Option], and [Version] in the menu screen to notify you that an update is available.
- When [Screen Reader] is set to [On] and the latest screen reader data is available, a red notification badge will appear over the (Setup) tab, [Accessibility], [Screen Reader], and [Screen Reader Language] on the menu screen.

Icons used in the “Help Guide”

S&Q: Menu items displayed in the still image shooting modes
S&Q: Menu items displayed in the movie recording modes and slow-motion/quick-motion shooting modes
S&Q: Menu items displayed in any of the still image shooting modes, movie recording modes, or slow-motion/quick-motion shooting modes

---

Related Topic

- Add Item
- Display From My Menu
- Assigning frequently used functions to buttons and dials (Custom Key/Dial Set.)
- Still/Movie/S&Q dial and mode dial
- Main menu (shooting setting list)
- Version
- Screen Reader

TP1002133963

5-069-971-11(6) Copyright 2026 Sony Corporation

Interchangeable Lens Digital Camera
ILCE-7M5 α7V

Main menu (shooting setting list)

Select the (Main) tab on the menu screen to display a list of shooting settings. You can confirm the settings before shooting or for each scene, and also change the settings directly from this screen.

Main menu for shooting still images

Main 1

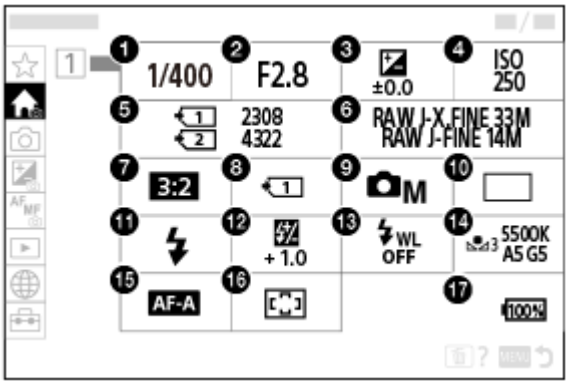

1. Shutter Speed *
2. Aperture *
3. Exposure Comp.
4. ISO
5. Number of recordable images
6. Image Quality Settings
7. Aspect Ratio
8. Rec. Media Settings
9. Shoot Mode
10. Drive Mode
11. Flash Mode
12. Flash Comp.
13. Wireless Flash
14. White Balance
15. Focus Mode
16. Focus Area

17. Remaining battery level

* When the shooting mode is [Program Auto], the shutter speed and aperture value are displayed in the same area. You can perform Program Shift by selecting the area.

Main menu for shooting movies

Main 1

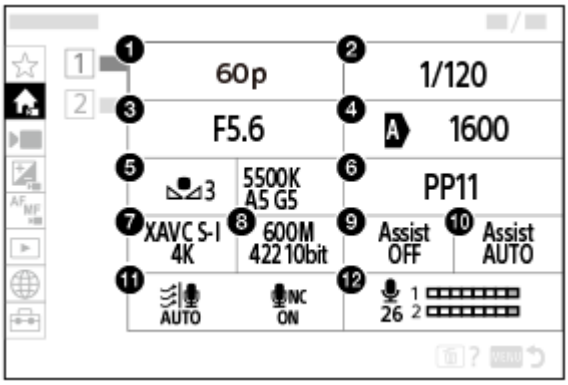

1. Rec Frame Rate/ S&Q Frame Rate Settings (when shooting slow-motion/quick-motion movies)/ Frame Rate Settings (when shooting time-lapse)
2. Shutter Speed
3. Aperture
4. ISO
5. White Balance
6. Picture Profile
7. File Format
8. Record Setting/ S&Q Record Setting (when shooting slow-motion/quick-motion movies)/ Record Setting (when shooting time-lapse)
9. Gamma Display Assist
10. Gamma Disp. Assist Typ.
11. Audio NR Settings
12. Audio Rec Level

Main 2

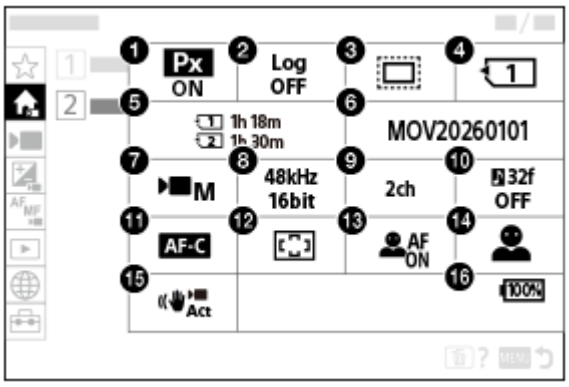

1. Px Proxy Recording
2. Log Shooting Setting
3. APS-C S35 Shooting
4. Recording Media
5. Available recording time
6. File Settings
7. Shoot Mode
8. Shoe Audio Format *
9. Shoe Audio Ch No. *
10. 32bit float WAV Rec. *
11. Focus Mode
12. Focus Area
13. Subject Recog in AF
14. Recognition Target
15. SteadyShot
16. Remaining battery level

* When the camera's system software (firmware) version is Ver.2.00 or later

Hint

- If you assign the [Display Main Menu] function to the desired key using the custom key settings, you can also open the Main menu by pressing the assigned key.
- You can open the setting screens by touching the icons on the main menu when [Touch Operation] is set to [On] and [Menu Screen] under [Touch Panel Settings] is set to [On].
- Touch the item for number of recordable images/available recording time on the main menu to open the [Format] screen.

Related Topic

- MENU button
- Assigning frequently used functions to buttons and dials (Custom Key/Dial Set.)

TP1002161115

5-069-971-11(6) Copyright 2026 Sony Corporation

Fn (function) button

If you press the Fn (function) button while shooting or playing back images, a menu (function menu) containing frequently used functions will appear on the screen, allowing you to quickly call up the functions.

Example of function menu

The displayed items differ depending on the camera status.

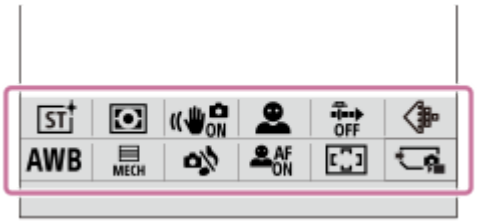

Hint

- Use [Fn Menu Settings]/[Fn Menu Settings] to register your favorite functions to the function menus for shooting still images, for shooting movies, and for playing back images, respectively. You can register 12 functions to each function menu.
- When [Touch Operation] is set to [On] and [Shooting Screen]/[Playback Screen] under [Touch Panel Settings] is set to [On], touch operations on the function menu screen are possible.
- When [Touch Operation] is set to [On] and [Shooting Screen]/[Playback Screen] under [Touch Panel Settings] is set to [On], you can also open [Fn Menu Settings]/[Fn Menu Settings] by holding down the icon in the function menu.
- When [Swipe Up] under [Shooting Screen] is set to [Open the Fn Menu], the function menu can be displayed using touch operations by swiping the shooting screen upward quickly. When [Playback Screen] is set to [On], the function menu can be displayed using touch operations by swiping the playback screen upward quickly.
- Swipe downward from the area outside of the function menu or touch the area outside of the function menu to close the function menu.

1. **Press the Fn (Function) button.**

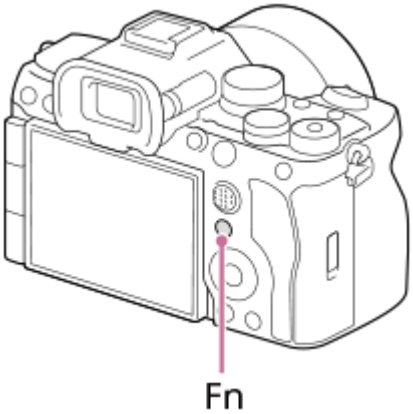

- On the shooting screen, press DISP on the control wheel repeatedly to display a screen mode other than [For viewfinder], and then press the Fn button.

2. **Press the top/bottom/left/right side of the control wheel to select a function to set.**

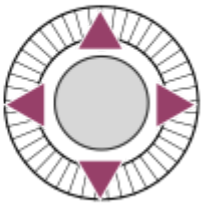

3 **On the shooting screen, turn the front dial to select the desired setting.**

- Some functions can be fine-tuned using the rear dial L or rear dial R.

4 **Press the center of the control wheel.**

Using the Fn button in the [For viewfinder] display

If you press the Fn button while the monitor display is set to [For viewfinder], you can directly operate items you want to change.

In the auto mode

In the P/A/S/M mode

- The displayed contents and their positions shown in the illustrations are just a guideline, and may differ from the actual display.

To adjust settings from the dedicated setting screens

Select the icon for the desired function and then press the center of the control wheel. The dedicated setting screen for the function will appear. Follow the operating guide **(A)** to adjust settings.

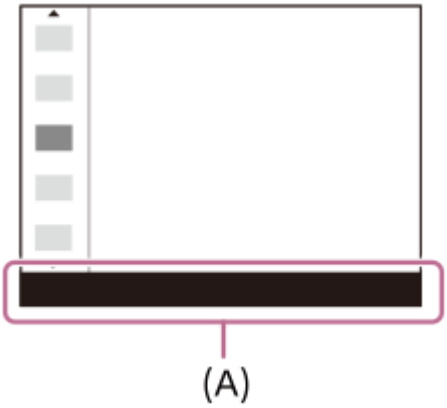

Note

- Items that are grayed out on the [For viewfinder] screen cannot be changed by pressing the Fn button.
- On the [For viewfinder] screen, you cannot set fine adjustments such as [Creative Look] or [Picture Profile]. To configure these settings or check the effects of the settings on the monitor, open the dedicated setting screen.

Related Topic

- Fn Menu Settings (still image/movie)
- Fn Menu Settings (playback)
- DISP (Display Setting) button
- Touch Operation
- Touch Panel Settings

TP1002110573

5-069-971-11(6) Copyright 2026 Sony Corporation

C (custom) buttons

If you assign frequently used functions to the custom buttons (C1 to C4) in advance, you can quickly call up those functions simply by pressing the button during shooting or playback.
Recommended functions are assigned to the custom buttons by default.

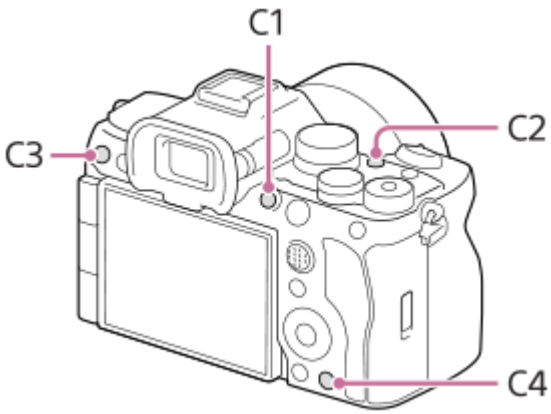

To check/change the functions of the custom buttons

You can confirm the function currently assigned to each custom button via the following procedure.
MENU → (Setup) → [Operation Customize] → [Custom Key/Dial Set.], [Custom Key/Dial Set.] or [Custom Key Setting].
If you want to change the function of the custom button, press the center of the control wheel while the custom button is selected. The functions that can be assigned to that button will appear. Select your desired function.

Related Topic

- Assigning frequently used functions to buttons and dials (Custom Key/Dial Set.)

TP1002151139

5-069-971-11(6) Copyright 2026 Sony Corporation

Interchangeable Lens Digital Camera
ILCE-7M5 α7V

DISP (Display Setting) button

By pressing the DISP (Display Setting) button, you can change the content displayed on the screen during shooting and playback. The display switches each time the DISP button is pressed. The viewfinder display and the monitor display for shooting can be set separately.

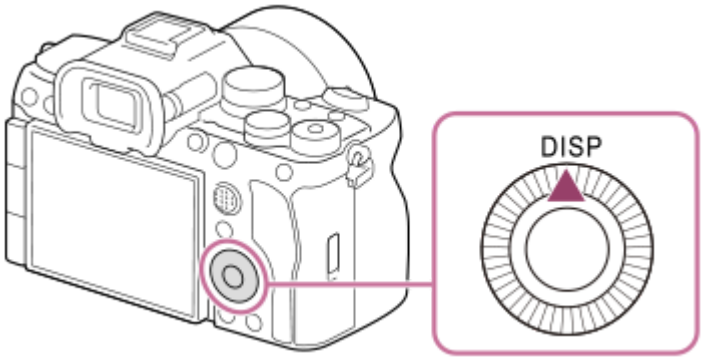

Hint

- The monitor can be turned off with the DISP button. Add a check mark to [Monitor Off] under MENU → (Setup) → [Operation Customize] → [DISP (Screen Display)]/[DISP (Screen Display)] → [Monitor].

During shooting (Monitor)

When shooting still images:
Display All Info. → No Disp. Info. → Histogram&Level → For viewfinder → Display All Info.

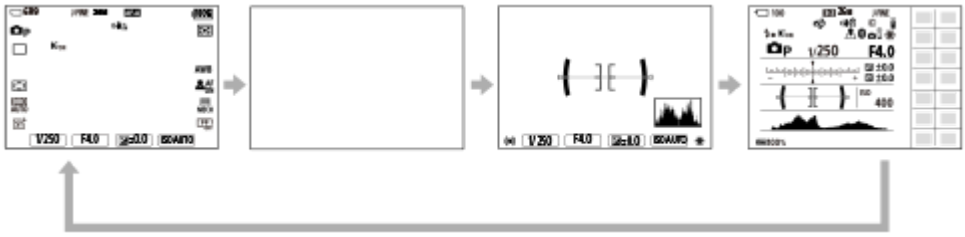

When shooting movies:
Display All Info. → No Disp. Info. → Histogram&Level → Display All Info.

During shooting (Viewfinder)

When shooting still images:
Histogram&Level → Custom 1 → No Disp. Info. → Histogram&Level

When shooting movies:
Histogram&Level → No Disp. Info. → Histogram&Level

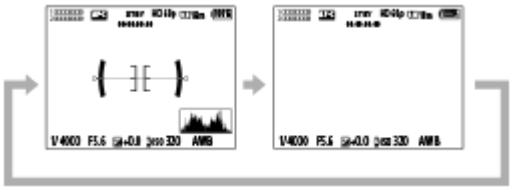

- To switch the information displayed on the viewfinder, press the DISP button while looking into the viewfinder.
- For [Custom 1]/[Custom 2]/[Custom 3] when shooting still images, you can customize the displayed items in [Finder] under [DISP (Screen Display)].

During playback (Monitor/Viewfinder)

Display Info. → Histogram → No Disp. Info. → Display Info.

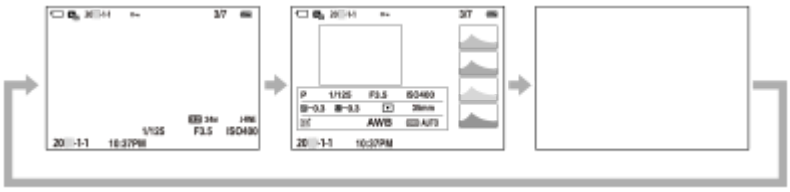

- If the image has an overexposed or underexposed area, the corresponding section will blink on the histogram display (overexposed/underexposed warning).
- The settings for playback are also applied in [Auto Review].

Hint

- If [Vertical Display] is set to [On], the information display will rotate vertically to fit the orientation of the camera when you hold the camera vertically while the shooting screen is displayed.

Note

- The displayed contents and their position shown in the illustration are just a guideline, and may differ from the actual display.
- The following are not displayed in the default settings.
  - Histogram
  - Level
  - Custom 2
  - Custom 3
  - Monitor Off
  - Display All Info. (when using the viewfinder)
- If the monitor display is set to [For viewfinder], the display will switch to all information when movie shooting starts.
- If the camera is connected to a TV, monitor, etc. via an HDMI cable, the playback screen will not be displayed in the viewfinder.

Related Topic

- DISP (Screen Display) (still image)
- DISP (Screen Display) (movie)

TP1002151185

5-069-971-11(6) Copyright 2026 Sony Corporation

Delete button

You can delete an image currently being displayed by pressing the 🗑 (Delete) button.

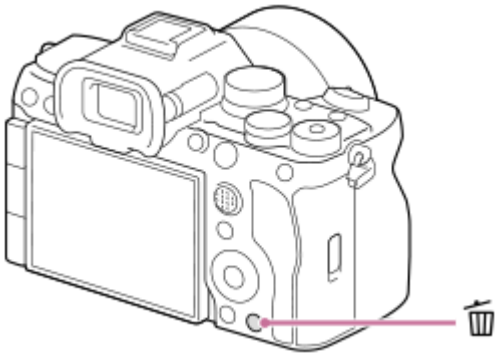

- When a confirmation message appears after you press the 🗑 (Delete) button, use the control wheel to select [Delete] and press the center.
- You can also delete two or more images at once.
  Select MENU → ▶ (Playback) → [Delete] → [Delete]. Then, select the images you want to delete.

Hint

- If you set MENU → ▶ (Playback) → [Delete] → [🗑 Delete pressing twice] to [On], you can delete images by pressing the 🗑 (Delete) button twice in a row.
- Other than the single-image playback screen, you can also use the 🗑 (Delete) button for the following operations.
  - Custom Key
  - Opening the context menu ([Add to My Menu]/[In-Camera Guide])

Related Topic

- Deleting multiple selected images (Delete)
- Delete confirm.
- Delete pressing twice
- C (custom) buttons
- In-Camera Guide

TP1002110629

5-069-971-11(6) Copyright 2026 Sony Corporation

AEL button

If the subject does not reach the proper brightness even when you point the camera toward the subject and press the shutter button halfway down, you can press the AEL button at the desired brightness to perform metering and lock the exposure (AE lock function). Once the exposure is locked, refocus on the subject and shoot the image.

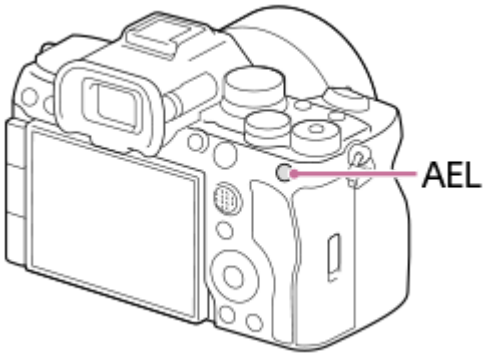

Hint

- In the default settings, [AEL hold] is assigned to the AEL button.

Related Topic

- AE lock

TP1002151142

5-069-971-11(6) Copyright 2026 Sony Corporation

AF-ON button

You can use the AF-ON button to adjust the focus without pressing the shutter button halfway down ([AF On] function) in the following cases:

- When you want to focus at a specific shooting distance predicting the position of the subject.
- When you want to focus and release the shutter separately.

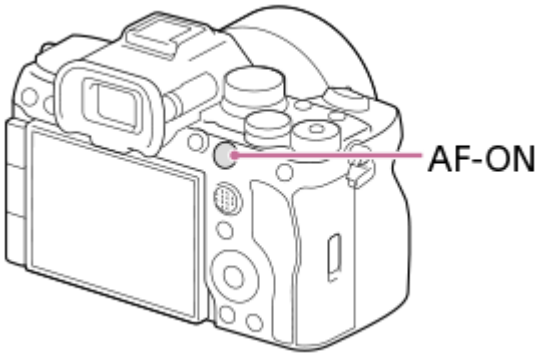

Related Topic

- AF On

TP1002151143

5-069-971-11(6) Copyright 2026 Sony Corporation

Front dial and rear dial (L/R)

You can use the front dial or two rear dials (L/R) to quickly change the setting values in the following cases:

- When you want to adjust the aperture value or shutter speed.
- When you want to change the camera settings during shooting.

During playback, you can turn the dials to browse images.

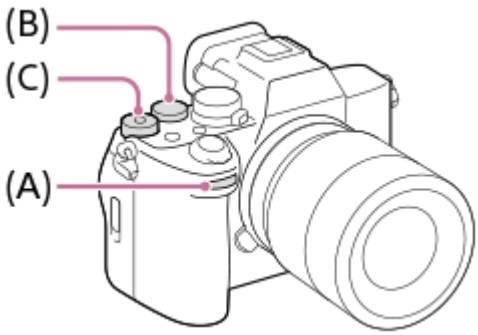

(A): Front dial
(B): Rear dial L
(C): Rear dial R

Hint

- You can use [Custom Key/Dial Set.]/[Custom Key/Dial Set.] to assign the desired functions to each dial.
- You can also use the [My Dial Settings] function to assign your desired functions to the dials, and recall those functions when required.

Related Topic

- Aperture Priority
- Shutter Priority
- Manual Exposure
- Exposure Ctrl Type
- Changing the function of the dial temporarily (My Dial Settings)
- Assigning frequently used functions to buttons and dials (Custom Key/Dial Set.)
- Av/Tv Rotate

TP1002151144

5-069-971-11(6) Copyright 2026 Sony Corporation

Keyboard screen

When manual character entry is required, a keyboard is displayed on the screen. For examples of functions that use the keyboard, see “Related Topic” at the bottom of this page.

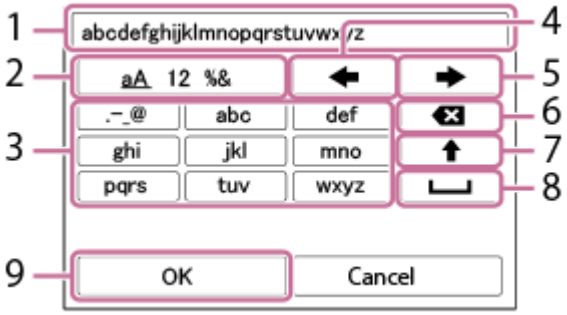

1. **Input box**
   The characters you entered are displayed.
2. **Switch character types**
   Each time you press this key, the character type will switch between alphabet letters, numerals and symbols.
3. **Keyboard**
   Each time you press this key, the characters corresponding to that key will be displayed one-by-one in order. To switch letters from lower to upper case, press ↑ (Up arrow).
4. ← (Left arrow)
   Moves the cursor in the input box to the left.
5. → (Right arrow)
   Moves the cursor in the input box to the right. This key is also used to finalize the input of a character being edited and move to the next character.
6. ⌫ (Delete)
   Deletes the character preceding the cursor.
7. ↑ (Up arrow)
   Switches a letter to upper or lower case.
8. ␣ (Space)
   Enters a space.
9. **OK**
   Press this key after entering characters to finalize the entered characters.

The procedure for entering alphabetic characters is explained below.

1. **Use the control wheel to move the cursor to the desired key.**
   - Each time you press the center of the control wheel, the characters will change.
   - To switch the letter to upper or lower case, press ↑ (Up arrow).
2. **When the character that you want to enter appears, press → (Right arrow) to confirm the character.**
   - Make sure to confirm one character at a time. Unless a character is confirmed, you cannot enter the next character.
   - Even if you do not press → (Right arrow), the entered character will be automatically confirmed after several seconds.
3. **After you finish entering all characters, press [OK] to finalize the entered characters.**

- To cancel input, select [Cancel].

Related Topic

- Copyright Info
- Access Point Set.
- Wired LAN (USB LAN)
- Edit Device Name
- Access Authen. Settings

TP1002142858

5-069-971-11(6) Copyright 2026 Sony Corporation

In-Camera Guide

The [In-Camera Guide] displays descriptions of MENU items, Fn (Function) items, and settings.

1. **Select the MENU or Fn item for which you want to see a description, and then press the 🗑 (Delete) button (A).**

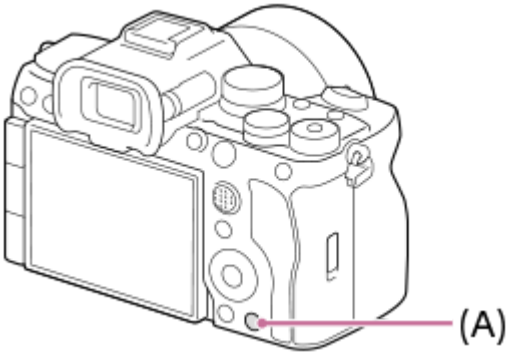

The descriptions of the item are displayed.

- Select [In-Camera Guide] and press the center of the control wheel when the context menu appears.

TP1002133976

5-069-971-11(6) Copyright 2026 Sony Corporation

Functions for accessibility

The camera is equipped with functions for accessibility to serve as visual and operational aids.

Screen reader function

The camera reads aloud information such as menu screens and messages.
To always enable the screen reader function, enable the screen reader function on the initial setup screen displayed after you turn the camera on for the first time.
Once you use the screen reader function on the initial setup screen, the screen reader function will be kept enabled after the initial setup, and you can switch it on and off by pressing and holding the MENU button.
The MENU button is located on the rear side of the camera, immediately to the left of the eyepiece part of the viewfinder, immediately above the monitor, and is a horizontally long button.

Enlarge screen function

You can enlarge the menu screen display for better readability of the text. (Some menu screens do not support the enlarging function.)
Select MENU → (Setup) → [Accessibility] → [Enlarge Screen] to enable the function. The menu screen display will be enlarged when you press the custom key on the menu screen.
For details, refer to " Enlarge Screen ."

Control setting function for the mode dials

This function allows you to operate settings via the menu instead of using the mode dials on the camera.
By selecting [Set with Menu] for a particular mode dial under MENU → (Setup) → [Accessibility] → [Mode Dial Control Set], you can change the settings by operating the menu without using that mode dial.
For details, refer to " Mode Dial Control Set ."

Hint

- If you did not use the screen reader function on the initial setup screen, you can enable the function from the menu. Select MENU → (Setup) → [Accessibility] → [Screen Reader] → [Screen Reader] → [On].
- If you did not use the screen reader function on the initial setup screen, [MENU Long Press to Switch] under [Screen Reader] will be set to [Off]. Set [MENU Long Press to Switch] to [On] when you want to switch the screen reader function on and off by pressing and holding the MENU button.
- In addition to the pre-installed languages, you can install one additional language as a screen reader language (this may vary depending on the country or region).
  Refer to " Screen Reader " for installation instructions.

Note

- Depending on the language you selected on the initial setup screen or in [A Language], the screen reader function may not be supported.
- When you update the camera's system software, you may need to update the screen reader data accordingly.
  For information on how to update the screen reader data, refer to " Screen Reader ."

Related Topic

- Screen Reader
- Enlarge Screen
- Mode Dial Control Set

TP1002158513

5-069-971-11(6) Copyright 2026 Sony Corporation

Inserting/removing the battery pack

1. **Slide the switch on the battery cover to open the cover.**

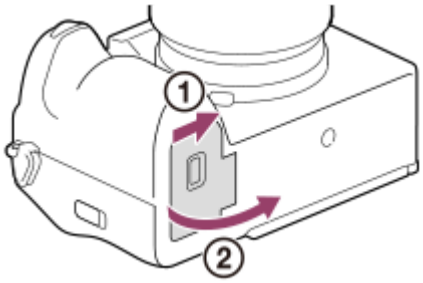

2. **Insert the battery pack while pressing the lock lever (A) with the tip of the battery until the battery locks into place.**

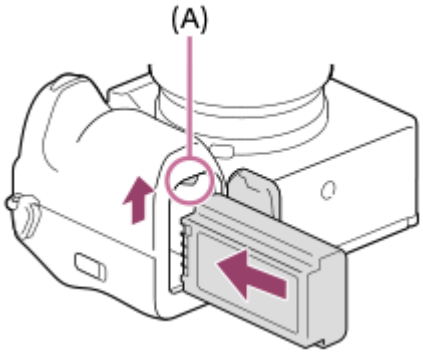

3. **Close the cover and slide the switch to the LOCK side.**

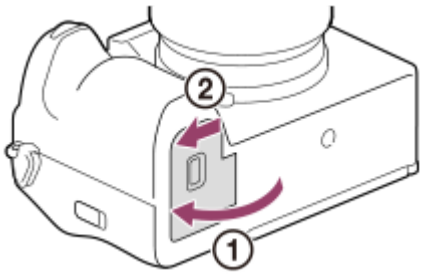

To remove the battery pack

Make sure that the access lamp is not lit, and turn off the camera. Then, slide the lock lever **(A)** and remove the battery pack. Be careful not to drop the battery pack.

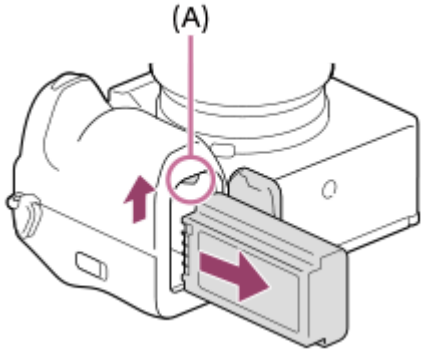

Related Topic

- Charging the battery with a USB-PD-compatible device
- Notes on the battery pack and charging the battery

TP1002133951

5-069-971-11(6) Copyright 2026 Sony Corporation

Charging the battery with a USB-PD-compatible device

Prepare the following commercially available products that support USB PD (USB Power Delivery).

- USB Type-C cable (USB-C® – USB-C) supporting 18 W or more
- External power supply supporting output of 18 W or more

For details on the supported output of USB Type-C cables and external power sources, refer to the following website.
https://www.sony.net/di-power_reqmts_z/

1. **Turn off the camera.**

2. **Connect the USB Type-C terminal of the camera to the USB Type-C terminal of the external power supply (USB-PD-compatible) using a commercially available USB Type-C cable (USB-PD-compatible).**

   - You can use either of the USB Type-C terminals, USB PORT 1 or USB PORT 2, for charging. The charging time is the same regardless of which terminal you use.

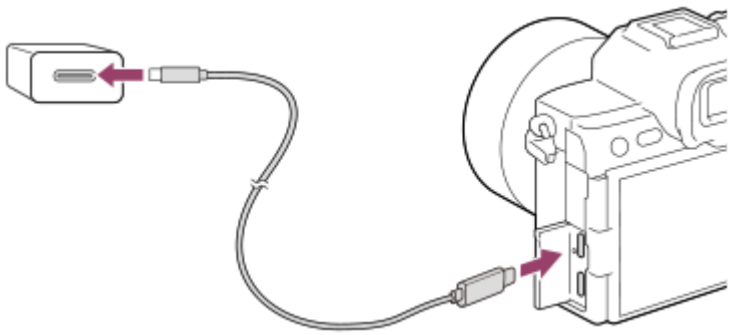

Charge lamp on the camera (orange)
Lit: Charging
Off: Charging finished
Flashing: Charging error or charging paused temporarily because the camera is not within the proper temperature range

- Charging time (Full charge): The charging time is approximately 175 min. (when using an external power supply with an output of 27 W).
  The charging time varies depending on the external power supply and USB Type-C cable you are using.
- The above charging time applies when charging a fully depleted battery pack using USB PORT 1 at a temperature of 25 °C (77 °F). Charging may take longer depending on the conditions of use and circumstances.
- The charge lamp turns off when charging is completed.
- If the charge lamp lights up and then immediately turns off, the battery pack is fully charged.

Hint

- Charging is possible with USB-PD-compatible devices with an output of less than 18 W, but the charging time may be longer.
- You can also charge using a device that is not compatible with USB PD. Use a USB Type-C cable (USB-A - USB-C) (commercially available). When you use an AC adaptor, use one with a rated output of 1.5 A or higher.
  Charging may take longer than when using a USB-PD-compatible device.

Note

- Use a nearby wall outlet (wall socket) when using an AC Adaptor. If any malfunction occurs, disconnect the plug from the wall outlet (wall socket) immediately to disconnect from the power source. If you use the product with a charge lamp, note that the product is not disconnected from the power source even when the lamp turns off.
- If you turn on the camera, power will be supplied from the wall outlet (wall socket) and you will be able to operate the camera. However, the battery pack will not be charged.
- If the product is connected to a laptop computer that is not connected to a power source, the laptop battery level decreases. Do not leave the product connected to a laptop computer for an extended period of time.
- Do not turn on/off or restart the computer, or wake the computer from sleep mode when a USB connection has been established between the computer and the camera. Doing so may cause a malfunction. Before turning on/off or restarting the computer, or waking the computer from sleep mode, disconnect the camera from the computer.
- Charging cannot be guaranteed with a custom-built computer, modified computer, or a computer connected through a USB hub.
- The camera may not operate correctly when other USB devices are used at the same time.
- Before charging, be sure to also read “Notes on the battery pack and charging the battery.”

Related Topic

- Inserting/removing the battery pack
- Notes on the battery pack and charging the battery

TP1002133953

5-069-971-11(6) Copyright 2026 Sony Corporation

Using the battery charger abroad

You can use the battery charger (sold separately) in any country or region where the power supply is within 100 V to 240 V AC and 50 Hz/60 Hz.
Depending on the country/region, a converting plug adaptor may be needed to connect to a wall outlet (wall socket). Consult a travel agency, etc., and prepare one in advance.

Note

- Do not use an electronic voltage transformer as doing so may cause a malfunction.

TP1002110705

5-069-971-11(6) Copyright 2026 Sony Corporation

Using the camera with power supplied via USB

By supplying power to the camera from an external power source via USB, you can use the camera with reduced battery consumption during shooting and playback.

Prepare the following commercially available products that support USB PD (USB Power Delivery).

- USB Type-C cable (USB-C – USB-C) supporting 27 W or more
- External power supply supporting output of 27 W or more

For details on the supported output of USB Type-C cables and external power sources, refer to the following website.
https://www.sony.net/di-power_reqmts_z/

1. **Insert a sufficiently charged battery pack into the camera.**
   - The camera will not activate if there is no remaining battery. Insert a sufficiently charged battery pack into the camera.

2. **Connect the USB Type-C terminal of the camera to an external power supply (USB-PD-compatible) using a commercially available USB Type-C cable (USB-PD-compatible).**
   - You can use either of the USB Type-C terminals, USB PORT 1 or USB PORT 2, to supply power. MENU → (Setup) → [USB] → Set [USB Power Supply] to [Auto] or the port you are using ([PORT1]/[PORT2]).

3. **Turn on the camera.**
   - An icon ( ) indicating USB power supply will appear next to the battery display on the monitor, and power supply will start.

Hint

- It is possible to supply power from USB-PD-compatible devices with an output of less than 27 W, but the battery consumption may increase during power supply.
- You can also supply power using a device that is not compatible with USB PD. Use a USB Type-C cable (USB-A - USB-C) (commercially available). When you use an AC adaptor, use one with a rated output of 1.5 A or higher.

Note

- As long as the power is on, the battery pack will not be charged even if the camera is connected to an external power source.
- Under certain conditions, power may be supplied from the battery pack supplementarily even if the camera is connected to an external power source.
- Do not remove the battery pack while power is supplied. If you remove the battery pack, the camera will turn off.
- Only connect the USB cable to the camera or disconnect the USB cable from the camera while the camera is turned off.
- Due to an increase in temperature inside the camera, the continuous recording time may be shortened while power is supplied via USB. The area around the terminal may become hot. Be careful when handling it.
- When using a mobile charger as a power source, confirm that it is fully charged before use. Also, be careful of the remaining power on the mobile charger during use.

- Operation cannot be guaranteed with all external power supplies.

Related Topic

- Inserting/removing the battery pack
- USB Power Supply

TP1002321087

5-069-971-11(6) Copyright 2026 Sony Corporation

Memory cards that can be used

This camera supports CFexpress Type A memory cards and SD memory cards (UHS-I, UHS-II compatible).
When using microSD memory cards with this camera, be sure to use the appropriate adaptor.

For still-image shooting

The following memory cards can be used.

- CFexpress Type A memory cards
- SD/SDHC/SDXC memory cards

For movie recording (When [Px Proxy Recording] is set to [Off])

Recording formats and compatible memory cards are as shown in the table below.

File Format	Maximum recordable bit rate when recording	Supported memory card
XAVC HS 4K	280Mbps	• CFexpress Type A memory card (VPG200 or higher) • SDXC V60 or higher
XAVC S 4K	280Mbps	• CFexpress Type A memory card (VPG200 or higher) • SDXC V60 or higher
XAVC S HD	100Mbps	• CFexpress Type A memory card • SDHC/SDXC card (U3 or higher)
XAVC S-I 4K	600Mbps	• CFexpress Type A memory card (VPG200 or higher) • SDXC V90 or higher *
XAVC S-I HD	222Mbps	• CFexpress Type A memory card (VPG200 or higher) • SDXC V90 or higher

* When shooting XAVC S-I 4K movies, a CFexpress Type A memory card (VPG200 or higher) is required in the following cases:
- When the audio format recorded in the movie is one of the followings.
96 kHz 32-bit float 4ch / 96 kHz 32-bit float 2ch / 96 kHz 24-bit 4ch / 48 kHz 32-bit float 4ch
- When recording audio in a 32-bit float WAV file simultaneously with the movie

For movie recording (When [Px Proxy Recording] is set to [On])

Recording formats and compatible memory cards are as shown in the table below.

- Proxy recording is not possible when the recording frame rate is [120p]/[100p].
- Depending on the setting for [File Format], the maximum recording bit rate may be lower than when [Px Proxy Recording] is set to [Off].

File Format	Maximum recordable bit rate when recording	Supported memory card
XAVC HS 4K	200Mbps + 16Mbps*	• CFexpress Type A memory card (VPG200 or higher) • SDXC card (V60 or higher)
XAVC S 4K	200Mbps + 16Mbps*	• CFexpress Type A memory card (VPG200 or higher) • SDXC card (V60 or higher)
XAVC S HD	50Mbps + 16Mbps*	• CFexpress Type A memory card • SDHC/SDXC card (U3 or higher)
XAVC S-I 4K	600Mbps + 16Mbps*	• CFexpress Type A memory card (VPG200 or higher)
XAVC S-I HD	222Mbps + 16Mbps*	• CFexpress Type A memory card (VPG200 or higher)

* The maximum recording bit rate for proxy movies on this camera is 16 Mbps.

For S&Q Motion shooting (When [Px Proxy Recording] is set to [Off])

Recording formats and compatible memory cards are as shown in the table below.

File Format	Maximum recordable bit rate when recording	Supported memory card
XAVC HS 4K	500Mbps	• CFexpress Type A memory card (VPG200 or higher) • SDXC V90 or higher
XAVC S 4K	560Mbps	• CFexpress Type A memory card (VPG200 or higher) • SDXC V90 or higher
XAVC S HD	500Mbps	• CFexpress Type A memory card (VPG200 or higher) • SDXC V90 or higher
XAVC S-I 4K	1200Mbps	• CFexpress Type A memory card (VPG200 or higher)

File Format	Maximum recordable bit rate when recording	Supported memory card
XAVC S-I HD	890Mbps	• CFexpress Type A memory card (VPG200 or higher)

For S&Q Motion shooting (When [Px Proxy Recording] is set to [On])

Recording formats and compatible memory cards are as shown in the table below.

- Proxy recording is not possible when the recording frame rate is [120p]/[100p].
- Depending on the setting for [File Format], the maximum recording bit rate may be lower than when [Px Proxy Recording] is set to [Off].

File Format	Maximum recordable bit rate when recording	Supported memory card
XAVC HS 4K	250Mbps + 16Mbps*	• CFexpress Type A memory card (VPG200 or higher) • SDXC V60 or higher
XAVC S 4K	280Mbps + 16Mbps*	• CFexpress Type A memory card (VPG200 or higher) • SDXC V60 or higher
XAVC S HD	125Mbps + 16Mbps*	• CFexpress Type A memory card (VPG200 or higher) • SDXC V60 or higher
XAVC S-I 4K	600Mbps + 16Mbps*	• CFexpress Type A memory card (VPG200 or higher)
XAVC S-I HD	222Mbps + 16Mbps*	• CFexpress Type A memory card (VPG200 or higher)

* The maximum recording bit rate for proxy movies on this camera is 16 Mbps.

For time-lapse shooting (When [Px Proxy Recording] is set to [Off])

Recording formats and compatible memory cards are as shown in the table below.

File Format	Supported memory card
XAVC HS 4K	• CFexpress Type A memory card (VPG200 or higher) • SDHC/SDXC card (U3 or higher)
XAVC S 4K	
XAVC S HD	

File Format	Supported memory card
XAVC S-I 4K	• CFexpress Type A memory card (VPG200 or higher) • SDXC card (V90 or higher)
XAVC S-I HD	

For time-lapse shooting (When [Px Proxy Recording] is set to [On])

Recording formats and compatible memory cards are as shown in the table below.

File Format	Supported memory card
XAVC HS 4K XAVC S 4K	• CFexpress Type A memory card (VPG200 or higher) • SDXC V60 or higher
XAVC S HD	• CFexpress Type A memory card (VPG200 or higher) • SDHC/SDXC card (U3 or higher)
XAVC S-I 4K XAVC S-I HD	• CFexpress Type A memory card (VPG200 or higher)

Note

- In slow-motion recording, the recording bit rate is higher than usual. You may need a memory card that can be written at a higher speed.
- CFexpress Type B memory cards cannot be used.
- When an SDHC memory card is used to record movies over extended periods of time, the recorded movies are divided into files 4 GB in size.
- When recording a movie on memory cards in both the Slot 1 and the Slot 2, insert two memory cards with the same file system. Movies cannot be recorded simultaneously when using a combination of the exFAT file system and FAT32 file system.

Memory card	File system
CFexpress Type A memory card, SDXC memory card	exFAT
SDHC memory card	FAT32

- Charge the battery pack sufficiently before attempting to recover the database files on the memory card.
- If the marks below appear on the memory card icon when shooting, use another memory card:
  - : Indicates that the number of times the memory card can be rewritten is close to the upper limit.
  - : Indicates that the number of rewrites on the memory card has reached the upper limit.

Related Topic

- Notes on memory card
- Number of recordable images
- Recordable movie times
- S&Q Settings
- Time-lapse Settings

- Shoe Audio Set.

TP1002133959

5-069-971-11(6) Copyright 2026 Sony Corporation

Inserting/removing a memory card

Explains how to insert a memory card (sold separately) to the camera. You can use CFexpress Type A memory cards and SD memory cards with this camera.

1. **While sliding the switch on the memory card cover in the direction of ①, slide the cover in the direction of ② to open it.**

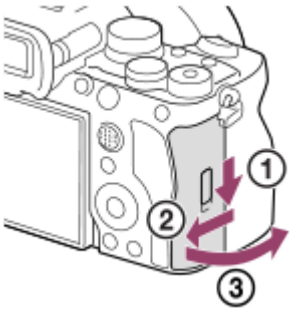

2. **Insert the memory card into the slot 1.**

- When using two memory cards, insert the second one into the slot 2.
- Slot 1 supports both CFexpress Type A memory cards and SD memory cards. Slot 2 supports SD memory cards only.
- In the default settings, images are recorded on the memory card in Slot 1.
- Insert a CFexpress Type A memory card with the label facing the monitor, and an SD memory card with the terminal facing the monitor. Insert the card until it clicks into place.

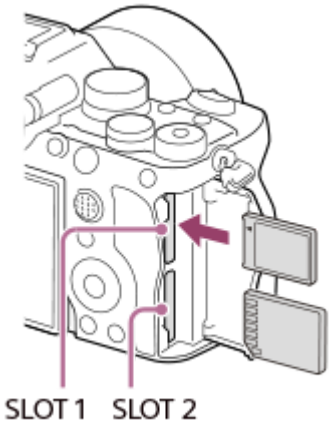

3. **Close the cover.**

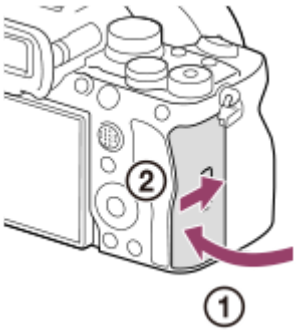

Hint

- When you use a memory card with the camera for the first time, it is recommended that you format the card on the camera for more stable performance of the memory card.
- You can change the memory card slot for recording by selecting MENU → (Shooting) → [Media] → [Rec. Media Settings] → [Recording Media] or [Recording Media]. The Slot 1 is used in the default settings.
- To record the same image on two memory cards at the same time or to sort recorded images onto two memory card slots by the image type (still image/movie), select MENU → (Shooting) → [Media] → [Rec. Media Settings], and then change the settings of [Recording Media] or [Recording Media].

To remove the memory card

Open the memory card cover and make sure that the access lamp **(A)** is not lit, then push in the memory card lightly once to remove it.

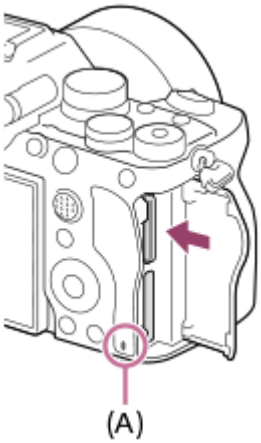

Related Topic

- Memory cards that can be used
- Notes on memory card
- Format
- Rec. Media Settings (still image/movie): Recording Media (still image)
- Rec. Media Settings (still image/movie): Recording Media (movie)
- Play Set of Multi. Media

TP1002133957

5-069-971-11(6) Copyright 2026 Sony Corporation

Attaching/removing a lens

Turn off the camera before attaching or removing the lens.

1. **Remove the body cap (A) from the camera and the rear lens cap (B) from the rear of the lens.**

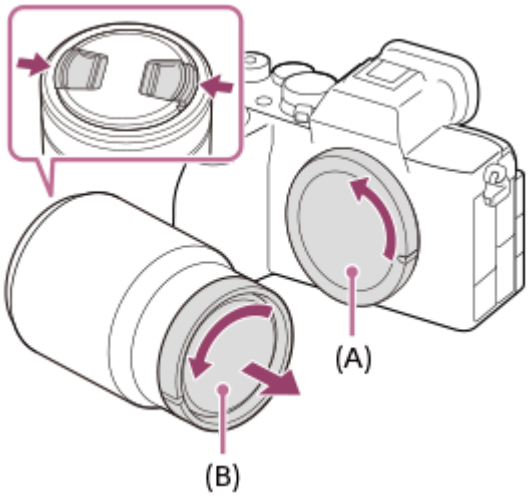

- It is recommended that you attach the front lens cap when you have done shooting.

2. **Mount the lens by aligning the two white index marks (mounting indexes) on the lens and camera.**

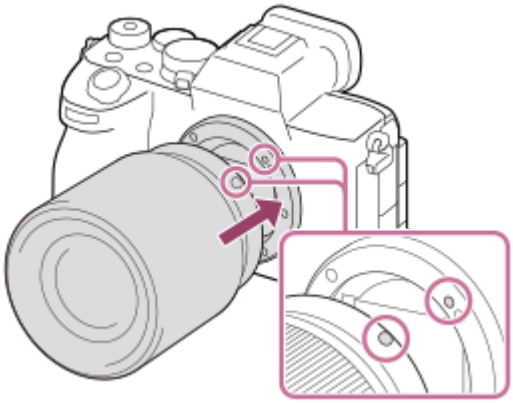

- Hold the camera with the lens mount facing down to prevent dust and debris from entering the camera.

3. **While pushing the lens lightly toward the camera, turn the lens slowly in the direction of the arrow until it clicks into the locked position.**

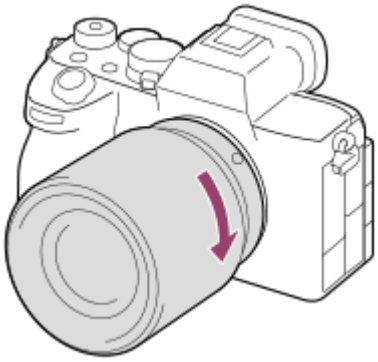

- Be sure to hold the lens straight when attaching it.

To remove the lens

Keep pressing the lens release button **(A)** and turn the lens in the direction of the arrow until it stops.
After removing the lens, attach the body cap to the camera and the lens caps to the front and rear of the lens to prevent dust and debris from entering the camera and lens.

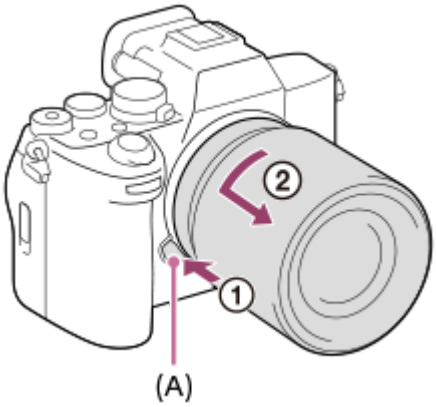

Note

- When attaching/removing the lens, work quickly in a dust-free location.
- Do not press the lens release button when attaching a lens.
- Do not use force when attaching a lens.
- A Mount Adaptor (sold separately) is required to use an A-mount lens (sold separately). When using the Mount Adaptor, refer to the operating manual supplied with the Mount Adaptor.
- If you want to shoot full-frame images, use a full-frame size compatible lens.
- When you use a lens with a tripod socket, attach a tripod to the tripod socket of the lens to help balance the weight of the lens.
- When carrying the camera with a lens attached, hold both the camera and the lens firmly.
- Do not hold the part of the lens that is extended for zoom or focus adjustment.

Related Topic

- Mount Adaptor

TP1002142809

5-069-971-11(6) Copyright 2026 Sony Corporation

Performing initial setup for the camera

By establishing a Bluetooth connection (pairing) between the camera and a smartphone and using the smartphone application Creators' App, you can perform initial camera settings such as date and time settings from the smartphone.
Install Creators' App from your smartphone's application store. If the application is already installed, be sure to update it to the latest version.
You can also install Creators' App by scanning the QR Code displayed on the screen of the camera using your smartphone.
For details on Creators' App, refer to the following website.
https://www.sony.net/ca/

1. **Set the ON/OFF (Power) switch to "ON" to turn on the camera.**

2. **Select the desired language and then press the center of the control wheel.**
   - The setting screen for the screen reader function, etc. and a privacy notice will appear. Follow the on-screen instructions.
   - Read the notice regarding biometrics carefully by opening the link provided on the privacy notice screen.

3. **Follow the instructions on the camera screen to connect the camera with your smartphone.**
   - Launch Creators' App on your smartphone to connect the camera with your smartphone.
   - If you do not connect a smartphone, the area/date/time setting screen will appear.
   - To connect your smartphone to the camera after the initial setup, select MENU → (Network) → [Cnct./Remote Sht.] → [Smartphone Connection].

4. **Perform initial camera setup on the Creators' App screen.**
   - Follow the instructions on the screen to set the following items.
     - Date and time / Display format
     - Auto Power OFF Temp.
     - Device name

     You can change these settings later from the camera menu.

On maintaining the date and time

This camera has an internal rechargeable backup battery for maintaining the date and time and other settings regardless of whether the power is turned on or off, or whether the battery pack is charged or discharged.
To charge the internal backup battery, insert a charged battery pack into the camera, and leave the product for 24 hours or more with the power turned off.
If the clock resets every time the battery pack is charged, the internal rechargeable backup battery may be worn out. Consult your service facility.

Hint

- To turn on the screen reader function, press and hold the MENU button on the initial setup screen. Depending on the language you have selected, the screen reader function may not be supported.

- By connecting the camera and a smartphone via the Bluetooth function, you can operate the camera using the smartphone and transfer images from the camera to the smartphone.

Note

- If the date and time setting is canceled halfway, the setting screen for the date and time appears every time you turn on the camera.
- The built-in clock of the camera may exhibit time errors. Adjust the time at regular intervals.
- When establishing a Bluetooth connection, only pair with trusted devices. Avoid unsolicited pairing requests or connections to unknown devices.
- Turn off the Bluetooth function when not in use.
- Check your paired devices regularly and delete any unnecessary ones.

Related Topic

- Pairing the camera with a smartphone (Smartphone Connection)
- Area/Date/Time Setting
- Auto Power OFF Temp.
- Edit Device Name
- Privacy Notice

TP1002154747

5-069-971-11(6) Copyright 2026 Sony Corporation

Confirmation before shooting

This section introduces useful settings and functions that you should know when using the camera. We recommend that you confirm these settings and functions before using the camera.
From each item name listed below, you can jump to the page explaining the respective functions.

Preparing a memory card for use with this camera

- Format
- Recover Image DB (still image/movie)

Selecting a memory card for recording

- Rec. Media Settings (still image/movie): Recording Media (still image)
- Rec. Media Settings (still image/movie): Recording Media (movie)
- Rec. Media Settings (still image/movie): Auto Switch Media Card

Preventing accidental failure to insert a memory card

- Release w/o Card

Selecting a memory card for playback

- Play Set of Multi. Media

Setting whether camera operating sounds are generated

- Audio Signal(Shooting)

Setting whether to always accept manual focusing operations

- Full Time DMF

Making it easy to check whether the camera is on standby or recording when set to a movie mode

- Emphasized REC Display

Resetting shooting settings or resetting all camera settings

- Setting Reset

TP1002151146

5-069-971-11(6) Copyright 2026 Sony Corporation

Shooting still images (Intelligent Auto)

This section describes how to shoot still images in the [Intelligent Auto] mode. In the [Intelligent Auto] mode, the camera automatically focuses and automatically determines the exposure based on the shooting conditions.

1. **Set the Still/Movie/S&Q dial to (Still) to select the still image shooting mode.**

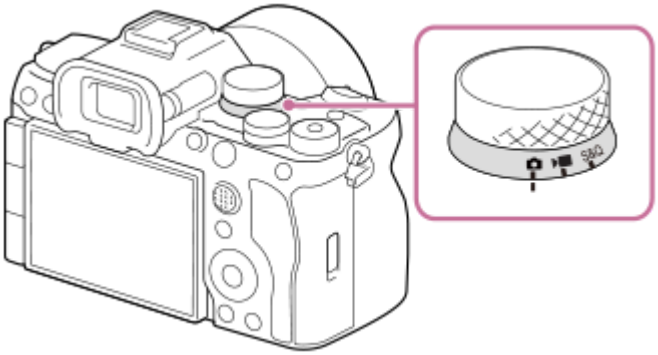

- Turn the Still/Movie/S&Q dial while pressing the lock release button on the front of the Still/Movie/S&Q dial.

2. **Set the mode dial to AUTO (Auto Mode).**

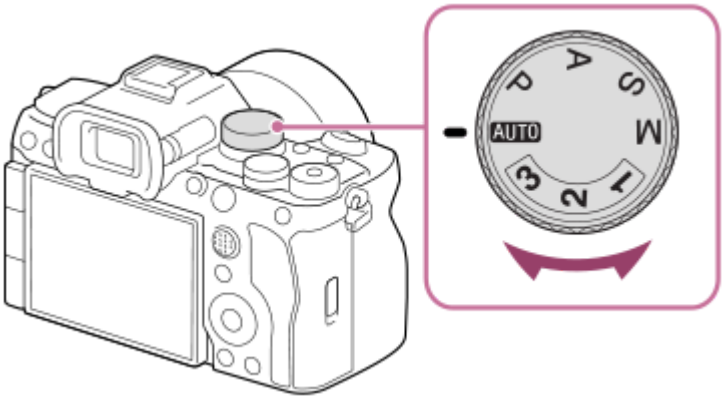

The shooting mode will be set to (Intelligent Auto).

3. **Adjust the monitor angle, and hold the camera. Or look through the viewfinder and hold the camera.**

4. **When a zoom lens is mounted, enlarge images by rotating the zoom ring.**

5. **Press the shutter button halfway down to focus.**

When the image is in focus, a beep sounds and the indicator (● , etc.) lights up.

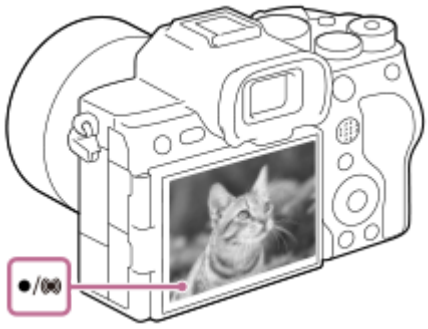

6 **Press the shutter button fully down.**

To shoot with the touch function icons

You can also shoot by touching an icon on the screen instead of pressing the shutter button. Swipe the monitor left or right to display the touch function icons, and then touch the (shutter) icon. You can view the captured image by touching the (switch to playback screen) icon.
For details on how to display the touch function icons, see "Touch function icons."

To select the focus mode yourself (Focus Mode / Focus Area)

Specifying [Focus Mode], such as selecting AF-S (Single-shot AF) for landscapes or still subjects and selecting AF-C (Continuous AF) for moving subjects, makes it easier to focus on the desired subject. In shooting modes other than [Intelligent Auto], you can also specify the focus position and range using [Focus Area].

Shooting while focusing on human eyes

The [Subject Recog in AF] function under [Subject Recognition] is enabled in the default settings, so you can use the Eye AF function immediately.

To shoot images with the focus locked on the desired subject (Focus-lock)

When you focus on the subject, the focus is locked while the shutter button is pressed halfway down. Switch to the desired composition and press the shutter button all the way down to take the picture.

- You can lock the focus on non-moving subjects. Set [Focus Mode] to AF-S (Single-shot AF).
- In shooting modes other than [Intelligent Auto], setting [Focus Area] to [Center Fix] makes it easier to focus on subjects located in the center of the screen.

Hint

- When the product cannot focus automatically, the focus indicator flashes and the beep does not sound. Either recompose the shot or change the focus mode or focus area settings. In [Continuous AF] mode, (focus indicator) lights up and the beep indicating that the focus has been achieved does not sound.

Note

- An icon indicating that data is being written is displayed after shooting. Do not remove the memory card while the icon is displayed. Doing so will prevent images from being recorded normally.

Related Topic

- Touch function icons
- Selecting the focus method (Focus Mode)

- Selecting the focus area (Focus Area)
- Playing back still images
- Auto Review (still image)

TP1002133964

5-069-971-11(6) Copyright 2026 Sony Corporation

Interchangeable Lens Digital Camera
ILCE-7M5 α7V

Shooting movies (Intelligent Auto)

This section describes how to record movies in the [Intelligent Auto] mode. In the [Intelligent Auto] mode, the camera automatically focuses and automatically determines the exposure based on the recording conditions.

1. **Set the Still/Movie/S&Q dial to (Movie) to select the movie recording mode.**

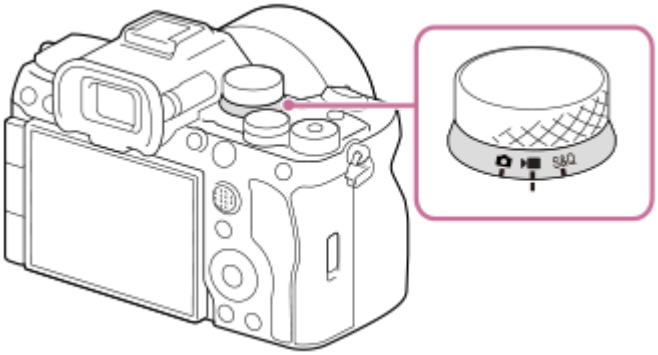

- Turn the Still/Movie/S&Q dial while pressing the lock release button on the front of the Still/Movie/S&Q dial.

2. **Set the mode dial to AUTO (Auto Mode).**

The shooting mode will be set to (Intelligent Auto).

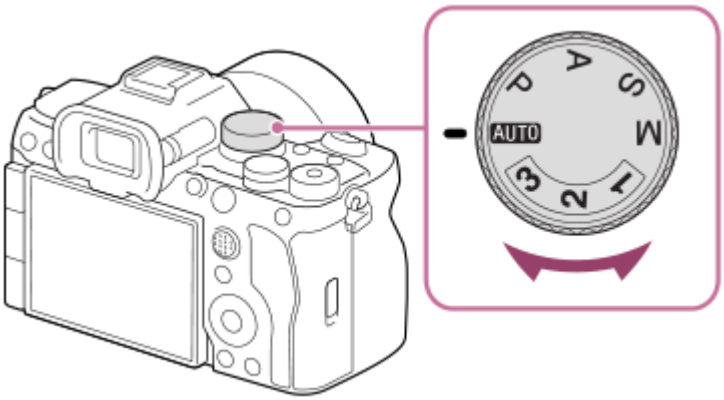

3. **Press the MOVIE (Movie) button to start recording.**

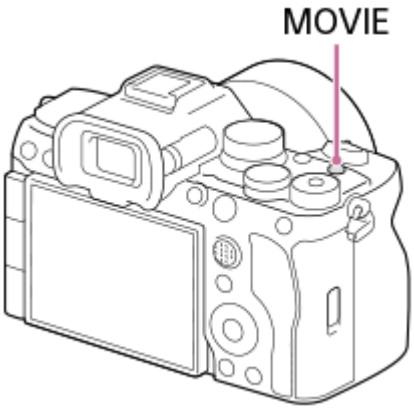

4 **Press the MOVIE button again to stop recording.**

To shoot with the touch function icons

You can also start shooting by touching an icon on the screen instead of pressing the MOVIE (movie) button. Swipe the monitor left or right to display the touch function icons, and then touch the ● (start recording) icon. You can view the captured image by touching the ▶ (switch to playback screen) icon.
For details on how to display the touch function icons, see "Touch function icons."

To select the recording format (File Format)

The resolution and degree of compatibility vary depending on the recording format (XAVC HS 4K/XAVC S 4K/XAVC S HD/XAVC S-I 4K/XAVC S-I HD). Select the format in accordance with the purpose of the movie to be shot.

To select the frame rate or image quality (Movie Settings)

The frame rate determines the smoothness of motion in movies. ([Movie Settings] → [Rec Frame Rate])
The image quality changes with the bit rate. ([Movie Settings] → [Record Setting])
If the bit rate is high, the amount of information will increase and you can shoot high-quality movies. However, this will result in a larger volume of data.
Select the frame rate and bit rate according to your preference and purpose.

To adjust the exposure (Exposure Ctrl Type/Exposure mode)

When [Exposure Ctrl Type] is set to [P/A/S/M Mode], select the exposure mode using the shutter speed and aperture value combination in the same way as when shooting a still image.
When [Exposure Ctrl Type] is set to [Flexible Exp. Mode], you can set the shutter speed, aperture value, and ISO sensitivity automatically or manually.

Also, if you enable [Touch AE] under [Touch Func. in Shooting], you can adjust the exposure to the touched area.

To select the focusing method (Focus Mode/ Focus Area)

Select AF-C (Continuous AF) or MF (Manual Focus) for [Focus Mode]. You can specify the focus area by setting [Focus Area].

Even during shooting with manual focus, you can temporarily switch to auto focus in the following ways.

- Press the custom key to which [AF On] is assigned, or press the shutter button halfway.
- Press the custom key to which [Subject Recognition AF] is assigned.
- Touch the subject on the monitor. (when [Touch Func. in Shooting] under [Shooting Screen] is set to [Touch Focus] or [Touch Tracking])

To record movie audio in 4 channels

Attach a genuine Sony accessory that supports 4-channel audio recording to the Multi Interface Shoe of the camera.

- If you record movie audio in 16 bits, you cannot record it in 4 channels.

Hint

- You can also assign the start/stop movie recording function to a preferred key.
- You can focus quickly while shooting movies by pressing the shutter button halfway down. (The sound of auto focus operation may be recorded in some cases.)
- You can change the settings for ISO sensitivity, exposure compensation, and focus area while shooting movies.
- The sounds of the camera and lens in operation may be recorded during movie shooting. To prevent sounds from being recorded, set [Audio Recording] to [Off].
- To prevent the operating sound of the zoom ring from being recorded when a power zoom lens is used, we recommend recording movies using the zoom lever of the lens. When moving the zoom lever of the lens, be careful not to flip the lever.

- When [Auto Power OFF Temp.] is set to [High], the camera can continue movie recording even when the temperature of the camera becomes high.

Note

- An icon indicating that data is being written is displayed after shooting. Do not remove the memory card while the icon is displayed.
- You cannot start recording a movie while writing data. Wait until data writing is completed and “STBY” is displayed before recording a movie.
- If the (Overheating warning) icon appears, the temperature of the camera has risen. Turn the power off and cool the camera and wait until the camera is ready to shoot again.
- The temperature of the camera tends to rise when shooting movies continuously, and you may feel that the camera is warm. This is not a malfunction. Also, [Internal temp. high. Allow it to cool.] may appear. In such cases, turn the power off and cool the camera and wait until the camera is ready to shoot again.
- For the continuous shooting time of a movie recording, refer to “Recordable movie times.” When movie recording is finished, you can record another movie by pressing the MOVIE button again. Recording may stop to protect the product, depending on the temperature of the product or the battery.
- Still images cannot be captured during movie recording. If you want to create a still image from a scene during movie recording, use [AutoCreateStillImage].

Related Topic

- Touch function icons
- File Format (movie)
- Movie Settings (movie)
- Exposure Ctrl Type
- Auto/Manual Swt. Set.
- Selecting the focus method (Focus Mode)
- Selecting the focus area (Focus Area)
- Shoe Audio Set.
- Assigning frequently used functions to buttons and dials (Custom Key/Dial Set.)
- REC w/ Shutter (movie)
- Audio Recording
- Auto Power OFF Temp.
- Recordable movie times
- Automatic creation of still images from Shot Marks

TP1002110488

5-069-971-11(6) Copyright 2026 Sony Corporation

Interchangeable Lens Digital Camera
ILCE-7M5 α7V

Finding functions from MENU

The displayed MENU items vary depending on the position of the Still/Movie/S&Q dial. In the table below, the modes in which each MENU item is displayed are indicated by the still image/movie/S&Q icons.

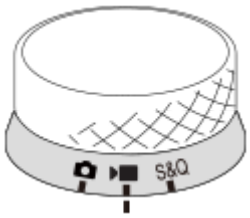

: The menu item is displayed when the Still/Movie/S&Q dial is set to (still image shooting mode).
: The menu item is displayed when the Still/Movie/S&Q dial is set to (movie recording mode) or S&Q (slow-motion/quick-motion shooting mode).
: The menu item is displayed regardless of the mode to which the Still/Movie/S&Q dial is set.

(Main) tab

Shooting settings are displayed in a list. For details, refer to “Main menu (shooting setting list).”

/ (Shooting) tab

Groups		Menu items
Image Quality/Rec		JPEG/HEIF Switch
		Image Quality Settings: File Format
		Image Quality Settings: RAW File Type
		Image Quality Settings: JPEG Quality
		Image Quality Settings: HEIF Quality
		Image Quality Settings: JPEG Image Size
		Image Quality Settings: HEIF Image Size
		Aspect Ratio
		File Format
		Movie Settings
		S&Q Settings
		Time-lapse Settings
		4K angle of view Priority
		Log Shooting Setting
		Px Proxy Settings
		APS-C S35 Shooting
		Long Exposure NR
		High ISO NR
		HLG Still Image
		Color Space
		Lens Compensation
Media		Format
		Rec. Media Settings: Recording Media
		Rec. Media Settings: Recording Media
		Rec. Media Settings: Auto Switch Media Card
		Recover Image DB

Groups		Menu items
File		File/Folder Settings
		Select REC Folder
		Create New Folder
		IPTC Information
		Copyright Info
		Write Serial Number
		File Settings
Shooting Mode		Exposure Ctrl Type
		MR Recall Camera Setting
		MR Camera Set. Memory
		Shoot Mode
		S&Q Shoot Mode
		MR Memory/Recall Media
		Reg. Custom Shoot Set
Drive Mode		Drive Mode
		Drive Mode Limit
		Cont. Shooting Speed
		Cnt Sht Spd Bst Settings
		Pre-Capture Settings
		Bracket Settings
		Interval Shoot Func.
Composite RAW Sht.		NR Shooting Settings
		Shooting for HDR Set
Shutter/Silent		Silent Mode Settings
		Shutter Type
		e-Front Curtain Shut.
		Shoot. Start Display
		Release w/o Lens
		Release w/o Card
		Anti-flicker Set.

Groups		Menu items
Audio Recording		Audio Recording
		Audio Rec Level
		Audio Out Timing
		Audio NR Settings
		Shoe Audio Set.
TC/UB		Time Code Preset
		User Bit Preset
		Time Code Format
		Time Code Run
		Time Code Make
		User Bit Time Rec
Image Stabilization		SteadyShot
		SteadyShot
		SteadyShot Adjust.
		Focal Length
		Framing Stabilizer
Zoom		Zoom
		Zoom Range
		Custom Key Z. Speed
		Remote Zoom Speed
Shooting Display		Grid Line Display
		Grid Line Type
		Live View Display Set.
		Emphasized REC Display

Groups		Menu items
Marker Display		Aspect Marker
		Aspect Marker Type
		Aspect Marker Level
		Marker Display
		Center Marker
		Aspect Marker
		Safety Zone
		Guideframe
Shooting Option		Self-timer
		Auto Framing Settings
		AutoCreateStillImage
		after still img crt
		Selection/Memo Shot

(Exposure/Color) tab

Groups		Menu items
Exposure		BULB Timer Settings
		Auto Slow Shutter
		ISO
		ISO Range Limit
		ISO AUTO Min. SS
		Auto/Manual Swt. Set.
Exposure Comp.		Exposure Comp.
		Exposure step
		Exposure Std. Adjust
Metering		Metering Mode
		Face Priority in Multi Metering
		Spot Metering Point
		AEL w/ Shutter

Groups		Menu items
Flash		Flash Mode
		Flash Comp.
		Exp.comp.set
		Wireless Flash
		Red Eye Reduction
		External Flash Set.
		Reg. Flash Shooting Set
White Balance		White Balance
		Priority Set in AWB
		Shutter AWB Lock
		Shockless WB
		WB Capt. Frame Size
Color/Tone		D-Range Optimizer
		Creative Look
		Picture Profile
		Select LUT
		Manage User LUTs
		Soft Skin Effect
Zebra Display		Zebra Display
		Zebra Level

AF MF (Focus) tab

Groups		Menu items
AF/MF		Focus Mode
		Priority Set in AF-S
		Priority Set in AF-C
		AF Lvl for Crossing
		AF Trk for Spd Chng
		AF Illuminator
		Aperture Drive in AF
		Preset Focus/Zoom
		AF w/ Shutter
		Full Time DMF
		AF Transition Speed
		AF Subj. Shift Sensitivity
		AF Assist
Focus Area		Focus Area
		Focus Area Limit
		Switch V/H AF Area
		Focus Area Color
		AF Area Registration
		Del. Regist. AF Area
		AF Area Auto Clear
		Area Disp. dur Tracking
		AF-C Area Display
		Phase Detect. Area
		Circ. of Focus Point
		AF Frame Move Amt

Groups		Menu items
Subject Recognition		Subject Recog in AF
		Recognition Target
		Recog Trgt Select Set
		Right/Left Eye Select
		Sbj Recog Frm Disp.
		Sbj Recog Frm Disp.
		Face Memory
		Regist. Face Priority
Focus Assistant		Focus Map
		Auto Magnifier in MF
		Focus Magnifier
		Focus Magnif. Time
		Initial Focus Mag.
		AF in Focus Mag.
		Initial Focus Mag.
Peaking Display		Peaking Display
		Peaking Level
		Peaking Color

(Playback) tab

Groups		Menu items
Playback Target		Play Set of Multi. Media
		Disp Set of Multi Media
		Playback Filter Condition
		Image Order
Magnification		Enlarge Image
		Enlarge Initial Mag.
		Enlarge Initial Position

Groups	S&Q	Menu items
Selection/Memo	S&Q	Protect
	S&Q	Rating
	S&Q	Rating Set(Custom Key)
	S&Q	Clip Flag
Delete	S&Q	Delete
	S&Q	Delete pressing twice
	S&Q	Delete confirm.
	S&Q	Delete Slot1/2
	S&Q	Initial Pos. When Exec
Edit	S&Q	Crop
	S&Q	Rotate
	S&Q	Copy
	S&Q	Photo Capture
	S&Q	Create Still Image
	S&Q	after still img crt
	S&Q	JPEG/HEIF Switch
Viewing	S&Q	Cont. Play for Interval
	S&Q	Play Speed for Interval
	S&Q	Slide Show
Playback Option	S&Q	Image Index
	S&Q	Display as Group
	S&Q	Display Rotation
	S&Q	Focus Frame Display
	S&Q	Aspect Marker Disp.
	S&Q	Disp Specified Time Img.
	S&Q	Image Jump Setting

(Network) tab

Groups	S&Q	Menu items
Cnct./Remote Sht.	S&Q	Smartphone Connection
	S&Q	Remote Shoot Function
	S&Q	Select on Cam & Send
	S&Q	Reset Transfer Status
	S&Q	Cnct. while Power OFF
	S&Q	Remote Shoot Setting
FTP Transfer	S&Q	FTP Transfer Func.
Streaming	S&Q	Network Streaming
	S&Q	USB Streaming
Creators' Cloud	S&Q	Cloud Connection
	S&Q	Cloud Information
Wi-Fi	S&Q	Wi-Fi Connect
	S&Q	WPS Push
	S&Q	Access Point Set.
	S&Q	Wi-Fi Frequency Band *
	S&Q	Display Wi-Fi Info.
	S&Q	SSID/PW Reset
Bluetooth	S&Q	Bluetooth Function
	S&Q	Pairing
	S&Q	Manage Paired Device
	S&Q	Bluetooth Rmt Ctrl
	S&Q	Disp Device Address
Wired LAN	S&Q	LAN IP Address Setting
	S&Q	Display Wired LAN Info.
USB LAN/Tethering	S&Q	USB LAN Connection
	S&Q	USB LAN Disconnection
	S&Q	Tethering Connection
	S&Q	Tethering Disconnection
	S&Q	USB LAN/Teth Cnct

Groups	S&Q	Menu items
Network Option	S&Q	Airplane Mode
	S&Q	Edit Device Name
	S&Q	Import Root Certificate
	S&Q	Access Authen. Settings
	S&Q	Access Authen. Info
	S&Q	Wi-Fi Direct Settings
	S&Q	Reset Network Set.

* For some models only

(Setup) tab

Groups	S&Q	Menu items
Area/Date	S&Q	Language
	S&Q	Area/Date/Time Setting
	S&Q	NTSC/PAL Selector
Reset/Save Settings	S&Q	Setting Reset
	S&Q	Save/Load Settings
Operation Customize	S&Q	Custom Key/Dial Set.
	S&Q	Custom Key/Dial Set.
	S&Q	Custom Key Setting
	S&Q	Fn Menu Settings
	S&Q	Fn Menu Settings
	S&Q	DISP (Screen Display)
	S&Q	DISP (Screen Display)
	S&Q	Different Set for Still/Mv
	S&Q	REC w/ Shutter
	S&Q	S with Shutter Button
	S&Q	Zoom Ring Rotate

Groups	S&Q	Menu items
Dial Customize	S&Q	Custom Key/Dial Set.
	S&Q	Custom Key/Dial Set.
	S&Q	My Dial Settings
	S&Q	Av/Tv Rotate
	S&Q	Function Ring(Lens)
	S&Q	Lock Operation Parts
Touch Operation	S&Q	Touch Operation
	S&Q	Touch Panel/Pad
	S&Q	Touch Panel Settings
	S&Q	Touch Pad Settings
	S&Q	Touch Sensitivity
Accessibility	S&Q	Screen Reader
	S&Q	Enlarge Screen
	S&Q	Mode Dial Control Set
Finder/Monitor	S&Q	Select Finder/Monitor
	S&Q	Monitor Brightness
	S&Q	Viewfinder Bright.
	S&Q	Finder Color Temp.
	S&Q	Display Quality
	S&Q	Finder Frame Rate
	S&Q	Monitor Flip Direction
	S&Q	Vertical Display
Display Option	S&Q	TC/UB Disp. Setting
	S&Q	Gamma Display Assist
	S&Q	Gamma Disp. Assist Typ.
	S&Q	Display LUT
	S&Q	Shoot. Timing Display
	S&Q	Remain Shoot Display
	S&Q	Auto Review
	S&Q	Shoot Mode Sel. Screen

Groups	S&Q	Menu items
Power Setting Option	S&Q	Monitor Low Bright
	S&Q	Monitor Off
	S&Q	Power Save
	S&Q	Power Save by Monitor
	S&Q	Auto Power OFF Temp.
Sound Option	S&Q	Playback/Monitor. Vol.
	S&Q	4ch Audio Monitoring
	S&Q	Audio Signal(Shooting)
	S&Q	Audio Signal(Start/End)
	S&Q	Audio Signal Volume
USB	S&Q	USB Cnct Mode (PORT1)
	S&Q	USB Cnct Mode (PORT2)
	S&Q	USB LUN Setting
	S&Q	USB Power Supply
External Output	S&Q	HDMI Resolution
	S&Q	HDMI Output Settings
	S&Q	HDMI Info. Display
	S&Q	CTRL FOR HDMI
Setup Option	S&Q	Video Light Mode
	S&Q	Anti-dust Function
	S&Q	Auto Pixel Mapping
	S&Q	Pixel Mapping
	S&Q	Version
	S&Q	Display Serial Number
	S&Q	Privacy Notice
	S&Q	Certification Logo *

* For some models only

(My Menu) tab

Groups		Menu items
My Menu Setting		Add Item
		Sort Item
		Delete Item
		Delete Page
		Delete All
		Display From My Menu

Note

- The order in which the menu tabs are listed here differs from the actual display.

TP1002161093

5-069-971-11(6) Copyright 2026 Sony Corporation

Contents of this chapter

The following table of contents lists the features described in this chapter (“Using the shooting functions”). From each item name, you can jump to the page describing the respective functions.

Selecting a shooting mode

- Intelligent Auto
- Program Auto
- Aperture Priority
- Shutter Priority
- Manual Exposure
- Bulb shooting
- BULB Timer Settings
- Exposure Ctrl Type
- Auto/Manual Swt. Set.
- Shoot Mode (S&Q/time-lapse)
- Selecting a shooting mode using menu operations (Shoot Mode)

Convenient functions for shooting self-portrait videos and vlogs

- Self-timer (movie)
- Auto Framing Settings
- Framing Stabilizer

Focusing

- Selecting the focus method (Focus Mode)
- Selecting the focus area (Focus Area)
- Tracking subject (Tracking function)
- Manual Focus
- Direct manual focus (DMF)

Subject Recognition AF

- Focusing using subject recognition functions
- Subject Recog in AF (still image/movie)
- Recognition Target (still image/movie)
- Recog Trgt Select Set (still image/movie)
- Right/Left Eye Select (still image/movie)
- Sbj Recog Frm Disp. (still image)
- Sbj Recog Frm Disp. (movie)
- Face Memory (still image/movie)
- Regist. Face Priority (still image/movie)
- Selecting a person to track (Select Face to Track)

Using focusing functions

- Focus Standard
- Adjusting the focus area settings to the camera’s orientation (horizontal/vertical) (Switch V/H AF Area)
- Registering the current focus area (AF Area Registration)
- Deleting a registered AF Area (Del. Regist. AF Area)
- Focus Area Limit (still image/movie)
- Circ. of Focus Point (still image/movie)

- AF Frame Move Amt (still image/movie)
- Focus Area Color (still image/movie)
- AF Area Auto Clear
- Area Disp. dur Tracking
- AF-C Area Display
- Phase Detect. Area
- AF Lvl for Crossing
- AF Trk for Spd Chng
- AF Transition Speed
- AF Subj. Shift Sensitivity
- AF Assist
- AF/MF Selector
- Full Time DMF
- AF w/ Shutter
- AF On
- Focus Hold
- Priority Set in AF-S
- Priority Set in AF-C
- AF Illuminator
- Aperture Drive in AF
- Preset Focus/Zoom
- AF in Focus Mag.
- Auto Magnifier in MF
- Focus Magnifier
- Focus Magnif. Time (still image/movie)
- Initial Focus Mag. (still image)
- Initial Focus Mag. (movie)
- Focus Map
- Peaking Display

Adjusting the exposure/metering modes

- Exposure Comp. (still image/movie)
- Histogram display
- Exposure step (still image/movie)
- Exposure Std. Adjust (still image/movie)
- D-Range Optimizer (still image/movie)
- Metering Mode (still image/movie)
- Face Priority in Multi Metering (still image/movie)
- Spot Metering Point (still image/movie)
- AE lock
- AEL w/ Shutter
- Auto Slow Shutter
- Zebra Display

Selecting the ISO sensitivity

- ISO (still image/movie)
- ISO Range Limit (still image/movie)
- ISO AUTO Min. SS

White balance

- White Balance (still image/movie)
- Capturing a standard white color to set the white balance (custom white balance)
- WB Capt. Frame Size (still image/movie)
- Priority Set in AWB (still image/movie)
- Shutter AWB Lock
- Shockless WB

Log shooting settings

- Log shooting
- Log Shooting Setting
- Select LUT
- Manage User LUTs
- Display LUT

Adding effects to images

- Creative Look (still image/movie)
- Picture Profile (still image/movie)
- Soft Skin Effect (still image/movie)

Shooting with drive modes (continuous shooting/self-timer)

- Drive Mode
- Drive Mode Limit
- Cont. Shooting
- Cont. Shooting Speed
- Cnt Shoot Speed Boost
- Pre-Capture Settings
- Selection/Memo Shot
- Self-timer(Single)
- Self-timer(Cont)
- Cont. Bracket
- Single Bracket
- Indicator during bracket shooting
- Focus Bracket
- WB bracket
- DRO Bracket
- Bracket Settings

Self-timer (movie)

Interval Shoot Func.

Shooting still images with higher image quality

- NR Shooting Settings
- Shooting for HDR Set

Setting the image quality and recording format

- JPEG/HEIF Switch
- Image Quality Settings: File Format (still image)
- Image Quality Settings: RAW File Type
- Image Quality Settings: JPEG Quality/HEIF Quality
- Image Quality Settings: JPEG Image Size/HEIF Image Size
- Aspect Ratio
- HLG Still Image
- Color Space
- File Format (movie)
- Movie Settings (movie)
- S&Q Settings
- Time-lapse Settings
- 4K angle of view Priority
- Proxy Settings
- APS-C S35 (Super 35mm) Shooting (still image/movie)
- Angle of view

Using touch functions

- Touch Operation
- Touch Panel/Pad
- Touch Panel Settings
- Touch Pad Settings
- Touch Sensitivity
- Focusing using touch operations (Touch Focus)
- Starting tracking with touch operations (Touch Tracking)
- Shooting with touch operations (Touch Shutter)
- Adjusting the exposure with touch operations (Touch AE)

Shutter settings

- Silent Mode Settings (still image/movie)
- Shutter Type
- Using the electronic shutter
- Shoot. Start Display (still image)
- Shoot. Timing Display (still image)
- e-Front Curtain Shut.
- Release w/o Lens (still image/movie)
- Release w/o Card
- Anti-flicker Set.
- Differences between the [Anti-flicker Shoot.] and [Var. Shutter] functions

Using the zoom

- The zoom features available with this product
- Clear Image Zoom/Digital Zoom (Zoom)
- Zoom Range (still image/movie)
- Custom Key Z. Speed (still image/movie)
- Remote Zoom Speed (still image/movie)
- About zoom scale
- Zoom Ring Rotate

Using the flash

- Using flash (sold separately)
- Flash Mode
- Flash Comp.
- Exp.comp.set
- Wireless Flash
- Red Eye Reduction
- FEL lock
- External Flash Set.
- Reg. Flash Shooting Set

Reducing blur

- SteadyShot (still image)
- SteadyShot (movie)
- SteadyShot Adjust. (still image/movie)
- SteadyShot focal length (still image/movie)
- Framing Stabilizer

Lens Compensation (still image/movie)

Noise reduction

- Long Exposure NR
- High ISO NR

Setting the monitor display during shooting

- Shoot Mode Sel. Screen
- Auto Review (still image)
- Remain Shoot Display (still image)
- Grid Line Display (still image/movie)
- Grid Line Type (still image/movie)
- Live View Display Set.
- Aperture Preview
- Shot. Result Preview
- Bright Monitoring
- Emphasized REC Display
- Marker Display (still image)
- Marker Display (movie)
- Gamma Display Assist
- Gamma Disp. Assist Typ.

Recording movie audio

- Audio Recording
- Audio Rec Level
- Audio Out Timing
- Audio NR Settings
- Shoe Audio Set.

Creating still images while recording a movie

- Automatic creation of still images from Shot Marks
- Shot Marks after still image creation (shooting)

TC/UB settings

- TC/UB
- TC/UB Disp. Setting

Livestreaming video and audio

- Network Streaming (movie)
- USB Streaming (movie)

TP1002161094

5-069-971-11(6) Copyright 2026 Sony Corporation

Intelligent Auto

The camera shoots with automatic scene recognition.

1. **Set the Still/Movie/S&Q dial to the desired shooting mode.**
   - If you select S&Q (slow-motion/quick-motion), you can select [S&Q Motion] or [Time-lapse] on the [S&Q Shoot Mode] screen.

2. **Set the mode dial to AUTO (Auto Mode).**

   The shooting mode will be set to [Intelligent Auto].

3. **Point the camera at the subject.**

   When the camera recognized the scene, the icon for the recognized scene appears on the screen.

4. **Adjust the focus and shoot the image.**

About Scene Recognition

The Scene Recognition function allows the camera to automatically recognize shooting conditions.
When the camera recognizes certain scenes, the following icons and guides are displayed at the top of the screen:

- (Portrait)
- (Night Portrait)
- (Night Scene)
- (Backlight Portrait)
- (Backlight)
- (Landscape)
- (Macro)
- (Spotlight)
- (Low Light)

Note

- The product will not recognize the scene when you shoot still images with zoom functions other than optical zoom.
- The product may not properly recognize the scene under certain shooting conditions.

5-069-971-11(6) Copyright 2026 Sony Corporation

Program Auto

Allows you to shoot with the exposure adjusted automatically (both the shutter speed and the aperture value).

You can set shooting functions such as [ISO].

1. **Set the Still/Movie/S&Q dial to the desired shooting mode.**
   - If you select S&Q (slow-motion/quick-motion), you can select [S&Q Motion] or [Time-lapse] on the [S&Q Shoot Mode] screen.
2. **Set the mode dial to P (Program Auto).**
3. **Set the shooting functions to your desired settings.**
4. **Adjust the focus and shoot the subject.**

Program Shift (only during still image shooting)

When you are not using a flash, you can change the shutter speed and aperture (F-value) combination without changing the appropriate exposure set by the camera.
Turn the front dial/rear dial L to select the aperture value and shutter speed combination.

- "P" on the screen changes to "P*" when you turn the front dial/rear dial L.
- To cancel program shift, set the shooting mode to other than [Program Auto], or turn off the camera.

Note

- According to the brightness of the environment, the program shift may not be used.
- Set the shooting mode to another one than "P" or turn off the power to cancel the setting you made.
- When the brightness changes, the aperture (F-value) and shutter speed also change while maintaining the shift amount.

TP1002133968

5-069-971-11(6) Copyright 2026 Sony Corporation

Aperture Priority

You can shoot by adjusting the aperture and changing the range in focus, or by defocusing the background.

1. **Set the Still/Movie/S&Q dial to the desired shooting mode.**
   - If you select S&Q (slow-motion/quick-motion), you can select [S&Q Motion] or [Time-lapse] on the [S&Q Shoot Mode] screen.
2. **Set the mode dial to A (Aperture Priority).**
3. **Select the desired value by turning the front dial/rear dial L.**
   - Smaller F-value: The subject is in focus, but objects in front of and beyond the subject are blurred.
     Larger F-value: The subject and its foreground and background are all in focus.
   - If the aperture value you have set is not suitable for appropriate exposure, the shutter speed on the shooting screen will blink. If this happens, change the aperture value.
4. **Adjust the focus and shoot the subject.**

   The shutter speed is automatically adjusted to obtain proper exposure.

Hint

- Smaller F-value (opening the aperture) narrows the range that is in focus. This allows you to put the subject in sharp focus and blur objects in front of and beyond the subject (depth of field becomes shallower). Larger F-value (narrowing down the aperture) widens the range that is in focus. This allows you to shoot the depth of the scenery (depth of field becomes deeper).

Note

- The brightness of the image on the screen may differ from the actual image being shot.

Related Topic

- Aperture Preview

TP1002133971

5-069-971-11(6) Copyright 2026 Sony Corporation

Shutter Priority

By adjusting the shutter speed, you can shoot still images with different effects for moving objects, or record movies with natural movement.

1. **Set the Still/Movie/S&Q dial to the desired shooting mode.**
   - If you select S&Q (slow-motion/quick-motion), you can select [S&Q Motion] or [Time-lapse] on the [S&Q Shoot Mode] screen.
2. **Set the mode dial to S (Shutter Priority).**
3. **Select the desired value by turning the front dial/rear dial L.**
   - If proper exposure cannot be obtained after setup, the aperture value on the shooting screen blinks. If this happens, change the shutter speed.
4. **Adjust the focus and shoot the subject.**

   The aperture is automatically adjusted to obtain proper exposure.

Hint

- Use a tripod to prevent camera-shake when you have selected a slow shutter speed.
- When you shoot indoor sports scenes, set the ISO sensitivity to a higher value.

Note

- The SteadyShot warning indicator does not appear in [Shutter Priority] mode.
- When [Long Exposure NR] is set to [On] and the shutter speed is 1 second(s) or longer with a [Shutter Type] other than [Electronic Shutter] is set, noise reduction after shooting is performed for the same amount of time as the exposure time. However, you cannot shoot any more while noise reduction is in progress.
- The brightness of the image on the screen may differ from the actual image being shot.

Related Topic

- Long Exposure NR

TP1002110496

5-069-971-11(6) Copyright 2026 Sony Corporation

Manual Exposure

You can shoot with the desired exposure setting by adjusting both the shutter speed and aperture.

1. **Set the Still/Movie/S&Q dial to the desired shooting mode.**
   - If you select S&Q (slow-motion/quick-motion), you can select [S&Q Motion] or [Time-lapse] on the [S&Q Shoot Mode] screen.

2. **Set the mode dial to M (Manual Exposure).**

3. **Select the desired aperture value by turning the front dial.**
   Select the desired shutter speed by turning the rear dial L.
   - You can set which dial changes the aperture value and shutter speed with [Custom Key/Dial Set.] or [Custom Key/Dial Set.].
   - You can also set [ISO] to [ISO AUTO] in manual exposure mode. The ISO value automatically changes to achieve the appropriate exposure using the aperture value and shutter speed you have set.
   - When [ISO] is set to [ISO AUTO], the ISO value indicator will blink if the value you have set is not suitable for appropriate exposure. If this happens, change the shutter speed or aperture value.
   - When [ISO] is set to other than [ISO AUTO], use “M.M.” (Metered Manual)* to check the exposure value.
     Toward +: Images become brighter.
     Toward -: Images become darker.
     0: Appropriate exposure analyzed by the camera.
     * Indicates under/over for appropriate exposure. It is displayed using a numerical value on the monitor and with a metering indicator on the viewfinder. By customizing the viewfinder display, you can also display the values numerically in the viewfinder.

4. **Adjust the focus and shoot the subject.**

Hint

- By rotating the front dial/rear dial L while pressing the AEL button, you can change the shutter speed and aperture (F-value) combination without changing the set exposure value. (Manual shift)

Note

- The Metered Manual indicator does not appear when [ISO] is set to [ISO AUTO].
- When the amount of ambient light exceeds the metering range of the Metered Manual, the Metered Manual indicator flashes.
- The SteadyShot warning indicator does not appear in manual exposure mode.
- The brightness of the image on the screen may differ from the actual image being shot.

Related Topic

- ISO (still image/movie)
- Bulb shooting

5-069-971-11(6) Copyright 2026 Sony Corporation

Bulb shooting

You can shoot a trailing image of the movement of a subject with long exposure.
Bulb shooting is suitable for shooting trails from stars or fireworks, etc.

1. **Set the Still/Movie/S&Q dial to (Still) to select the still image shooting mode.**
2. **Set the mode dial to M (Manual Exposure).**
3. **Turn the rear dial L clockwise until [BULB] is indicated.**
4. **Select the aperture value (F-value) using the front dial.**
5. **Press the shutter button halfway down to focus.**
6. **Press and hold the shutter button for the duration of the shooting.**

   As long as the shutter button is pressed, the image sensor is exposed.

Hint

- When shooting fireworks, etc., focus at infinity in manual focus mode. If you use a lens whose infinity point is unclear, adjust the focus on the fireworks in the area you want to focus on in advance.
- In order to perform bulb shooting without causing the image quality to deteriorate, we recommend that you start shooting while the camera is cool.
- During bulb shooting, images tend to blur. It is recommended that you use a tripod or a Bluetooth remote commander (sold separately). When using the Bluetooth remote commander, you can start bulb shooting by pressing the shutter button on the remote commander. To stop bulb shooting, press the shutter button on the remote commander again.

Note

- The longer the exposure time, the more noise will be visible on the image.
- You cannot set the shutter speed to [BULB] in the following situations:
  - When the drive mode is set to the following:
    - [Cont. Shooting]
    - [Self-timer(Cont)]
    - [Cont. Bracket]
    - [Single Bracket]
    - [Focus Bracket]
  - [Shutter Type] is set to [Electronic Shutter].
  - Interval shooting
  - [Silent Mode] under [Silent Mode Settings] is set to [On]

  If you use the above functions when the shutter speed is set to [BULB], the shutter speed is temporarily set to 30 seconds.

Related Topic

- Manual Exposure
- Long Exposure NR

TP1002133973

5-069-971-11(6) Copyright 2026 Sony Corporation

BULB Timer Settings

You can set the exposure time for bulb shooting in 1-second increments. This is convenient for long-time exposure shooting in which the exposure time is predetermined.

1. **MENU→ (Exposure/Color) → [Exposure] → [BULB Timer Settings] → desired setting.**

Menu item details

BULB Timer:
When set to [On], exposure is performed for the length of time set in [Exposure Time]. When set to [Off], normal bulb shooting is performed, and exposure lasts only as long as the shutter button is pressed. (On/Off)

Exposure Time:
Sets the exposure time in 1-second increments. (2 seconds to 900 seconds)

Hint

- When [BULB Timer] is set to [On], a countdown to the end of the exposure time is displayed. When it is set to [Off], the elapsed exposure time is displayed.
- To stop bulb shooting during the exposure period set in [Exposure Time], press the shutter button on the camera or remote control.

Related Topic

- Bulb shooting

TP1002154658

5-069-971-11(6) Copyright 2026 Sony Corporation

Exposure Ctrl Type

S&Q

When you set the mode dial to P/A/S/M, you can select the method for setting the exposure (shutter speed, aperture, and ISO sensitivity) during movie shooting. With [P/A/S/M Mode], you can select the exposure mode using P/A/S/M on the mode dial. With [Flexible Exp. Mode], you can individually switch between the automatic and manual settings for aperture value, shutter speed, and ISO sensitivity, like the exposure control system of a professional camera.

1. **MENU → (Shooting) → [Shooting Mode] → [Exposure Ctrl Type] → desired setting.**

Menu item details

P/A/S/M Mode:
Select the desired exposure mode from among [Program Auto], [Aperture Priority], [Shutter Priority], and [Manual Exposure].

Flexible Exp. Mode:
Sets the aperture value, shutter speed, and ISO sensitivity automatically (Auto) or manually (Manual).
You can switch between the automatic and manual settings using the assigned custom key, or change the aperture, shutter speed, and ISO sensitivity values by turning the front dial, rear dial L, rear dial R, and control wheel.

Note

- Even if [Exposure Ctrl Type] is set to [Flexible Exp. Mode], when you shoot a movie by pressing the MOVIE (movie) button in a still image shooting mode, the movie will be shot in the exposure mode selected with the mode dial.

Related Topic

- Auto/Manual Swt. Set.

TP1002151149

5-069-971-11(6) Copyright 2026 Sony Corporation

Auto/Manual Swt. Set.

S&Q

When shooting movies, you can switch between the automatic and manual settings separately for aperture, shutter speed, and ISO sensitivity as you would with the exposure control system of a professional camera. Set [Exposure Ctrl Type] to [Flexible Exp. Mode] beforehand.

1. **MENU → (Exposure/Color) → [Exposure] → [Auto/Manual Swt. Set.] → desired setting item.**

Menu item details

Av Auto/Manual Switch:
Switches the aperture value between [Auto] and [Manual].

Tv Auto/Manual Switch:
Switches the shutter speed between [Auto] and [Manual].

ISO Auto/Manual Set:
Switches the ISO sensitivity between [Auto] and [Manual].

To switch between [Auto] and [Manual] using a custom keys

When [Exposure Ctrl Type] is set to [Flexible Exp. Mode], the following functions are assigned to the custom keys during movie recording.

- [L.PressAv Auto/Manual]: C2 (Custom 2) button
- [L.PressTv Auto/Manual]: C4 (Custom 4) button
- [L.PressISO Auto/Manual]: C1 (Custom 1) button

Each time you press and hold down the respective custom key, the aperture value, shutter speed, or ISO sensitivity switches between [Auto] and [Manual].
When [Manual] is selected, values can be locked by pressing the respective key. You can use this function to prevent the values from being unintentionally changed.
When [Auto] is selected, the proper exposure is set automatically, and when [Manual] is selected, the aperture value, shutter speed, and ISO sensitivity can be set with the following dials.

- Aperture value: front dial
- Shutter speed: control wheel
- ISO sensitivity: rear dial L

Note

- When you set the aperture value with the lens aperture ring, the aperture ring value takes priority over the dial value.

Related Topic

- Exposure Ctrl Type

TP1002151150

5-069-971-11(6) Copyright 2026 Sony Corporation

Shoot Mode (S&Q/time-lapse)

Select whether to shoot slow-motion and quick-motion movies or time-lapse movies when the Still/Movie/S&Q dial is set to S&Q.
This function can only be used when the Still/Movie/S&Q dial is set to S&Q (slow-motion/quick-motion recording mode).
The settings and playback speed for slow-motion and quick-motion recording can be changed in [S&Q S&Q Settings].
The settings and interval time for time-lapse recording can be changed in [Time-lapse Settings].

1. **MENU → (Shooting) → [Shooting Mode] → [S&Q Shoot Mode] → desired setting item.**
   - When [Shoot Mode Sel. Screen] is set to [Display], you can display the [S&Q Shoot Mode] screen simply by setting the Still/Movie/S&Q dial to S&Q.

Menu item details

S&Q Motion:
Allows you to shoot slow-motion/quick-motion movies.

Time-lapse:
Allows you to shoot time-lapse movies.

Related Topic

- S&Q Settings
- Time-lapse Settings
- Shoot Mode Sel. Screen

TP1002157005

5-069-971-11(6) Copyright 2026 Sony Corporation

Selecting a shooting mode using menu operations (Shoot Mode)

If you are having difficulty operating the mode dial, you can also change the shooting mode using menu operations. Set MENU → (Setup) → [Accessibility] → [Mode Dial Control Set] → [Shooting Mode Dial] to [Set with Menu] beforehand.

1. **MENU → / (Shooting) → [Shooting Mode] → [Shoot Mode].**
2. **Select (Still image), (Movie), (Slow-motion/quick-motion), or (Time-lapse) using the top/bottom side of the control wheel, and then select the desired setting using the left/right side of the control wheel.**

Menu item details

Intelligent Auto:
The camera shoots with automatic scene recognition.

Program Auto:
Allows you to shoot with the exposure adjusted automatically (both the shutter speed and the aperture value).

Aperture Priority:
You can shoot by adjusting the aperture and changing the range in focus, or by defocusing the background.

Shutter Priority:
By adjusting the shutter speed, you can shoot still images with different effects for moving objects, or record movies with natural movement.

Manual Exposure:
You can shoot with the desired exposure setting by adjusting both the shutter speed and aperture.

Memory recall:
Allows you to shoot an image after recalling often-used modes or camera settings registered in advance.

Related Topic

- Mode Dial Control Set
- Intelligent Auto
- Program Auto
- Aperture Priority
- Shutter Priority
- Manual Exposure
- Exposure Ctrl Type
- Recall Camera Setting

TP1002161095

5-069-971-11(6) Copyright 2026 Sony Corporation

Self-timer (movie)

S&Q

You can start shooting with the self-timer when recording a movie.

1. **Press / (Drive Mode) of the control wheel.**

   The [Self-timer] setting screen will be displayed.

   - You can also set the drive mode by selecting MENU → (Shooting) → [Shooting Option] → [Self-timer].

2. **Select [On] using the control wheel and set the desired countdown time.**

   - Rec Start delay: Sets the count time until the start of movie recording. (3 s/5 s/10 s)
   - Repetition: Sets whether to repeat the movie self-timer. (Repeat/Only Once)
     If you select [Repeat], the movie self-timer will be activated repeatedly even after movie recording is completed.
     If you select [Only Once], the movie self-timer will be canceled after movie recording is completed, and the camera will return to the normal movie recording standby mode.

3. **Adjust the focus and press the MOVIE (movie) button.**

   When the countdown appears on the recording standby screen, the self-timer lamp flashes, a beep sounds, and recording starts after the designated number of seconds has elapsed.

   - Press the MOVIE button again to end recording.

Menu item details

On:
Uses the movie self-timer function.

Off:
Does not use the movie self-timer function.

Hint

- To stop the self-timer countdown, press the MOVIE button again or press the button to which the [Self-timer] function is assigned.

Note

- If you press the MOVIE button in the still image shooting mode to start movie recording, [Self-timer] will not work.

TP1002154664

5-069-971-11(6) Copyright 2026 Sony Corporation

Interchangeable Lens Digital Camera
ILCE-7M5 α7V

Auto Framing Settings

S&Q

During movie recording or streaming, the camera automatically changes the composition by following the recognized subject and cropping so that even if the camera is fixed, you can shoot with camera-work (auto-framed shooting).
You can set the timing to start shooting with [Auto Framing], the size of the subject on the screen, etc.
This function cannot be used during slow-motion/quick-motion shooting or time-lapse shooting.

1. **MENU → (Shooting) → [Shooting Option] → [Auto Framing Settings] → [Auto Framing] → [On].**

2. **MENU → (Shooting) → [Shooting Option] → [Auto Framing Settings] → Select an item to set, and then select the desired setting.**

3. **Start shooting or streaming.**
   - A cropping frame is displayed on the monitor screen and follows the movement of the subject.
   - When [Touch Operation] is set to [On], you can select the subject of automatic framing using touch operations.

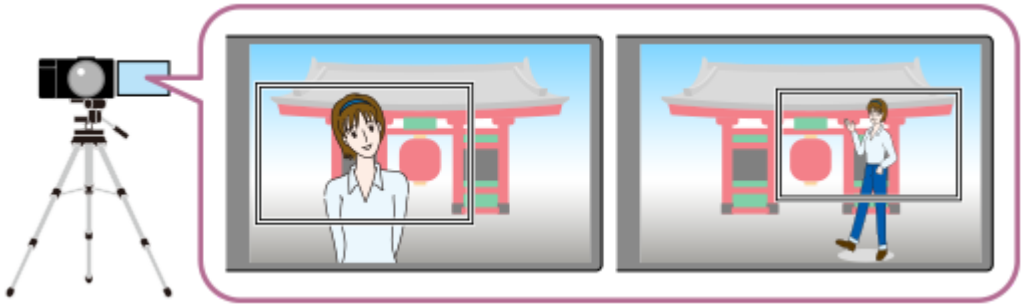

Menu item details

Auto Framing:
Sets whether to automatically frame shooting. When [On] is selected, the composition is automatically set so that the recognized person or touch-tracked subject is in the center of the screen. ([On]/[Off])

Framing Oper. Mode:
Sets the start method and operating method for [Auto Framing].

- **Start When Tracking** : Auto-framing starts at the same time as tracking starts with touch tracking, etc.
- **Auto Start** : Auto-framing starts when the subject is recognized.
- **Auto Start(15s swtc)** : When the subject is recognized, the camera repeats camera-work that smoothly switches between the cropped angle of view and the full angle of view at 15-second intervals.
- **Auto Start(30s swtc)** : When the subject is recognized, the camera repeats camera-work that smoothly switches between the cropped angle of view and the full angle of view at 30-second intervals.

Crop Level:
Sets the displayed size of the subject within the cropped frame after recognizing the subject. ([Large crop level]/[Medium crop level]/[Small crop level])
When [Recognition Target] is set to [Human], or when [Recognition Target] is set to [Auto] and a human is recognized, the cropped frame size changes dynamically according to the recognition frame. When [Recognition

Target] is set to an item other than [Human], or when [Recognition Target] is set to [Auto] and an item other than a human is recognized, the cropped frame size will be locked.

Framing Tracking Speed:

Sets the subject tracking speed for camera-work. (1 to 5)

Movie Rec/Streaming:

Sets whether the images recorded on the memory card and the images output via streaming are auto-framed images or full-angle images. ([Crop]/[Do not crop])
When [Crop] is selected, auto-framed images are recorded or streamed.

HDMI Output:

Sets whether the images output to HDMI are auto-framed images or full-angle images. ([Crop]/[Do not crop])
When [Crop] is selected, auto-framed images are output.

Hint

- The auto-framing function performs camera-work by cropping the 4K-resolution image. When using the auto-framing function, it is recommended that you set [File Format] to HD image quality in order to prevent deterioration of image quality.
- When setting the shutter speed manually and shooting with auto framing, it is recommended that you set a faster shutter speed to reduce blurring of the subject.
- When [Focus Area] is set to [Wide], the subject is recognized and framed. When it is set to [Spot], framing is performed around the spot frame. You can also change the cropping position by moving the spot frame during shooting.
- By using the smartphone application Creators' App, you can check the framing status and perform touch operations even at a distance from the camera.
  For more information about how to use Creators' App, refer to the following website.
  https://www.sony.net/ca/help/opr/

Note

- Auto-framing is available only in the movie recording mode.
- Even when [Auto Framing] is set to [On], the monitor always displays image in the full angle of view, and a frame indicating the cropping area is displayed during auto-framed shooting.
- If there are multiple recognized subjects, only the subject with the highest priority will be targeted.
- Depending on the settings for [File Format] and [Movie Settings], the angle of view may change when [Auto Framing] is set to [On].

TP1002157001

5-069-971-11(6) Copyright 2026 Sony Corporation

Framing Stabilizer

S&Q

The camera automatically corrects the composition so that the subject being tracked is kept at the same position in the composition, allowing you to record movies with the position of the subject stable. This function cannot be used during slow-motion/quick-motion recording and time-lapse movie recording.

1. **MENU → (Shooting) → [Image Stabilization] → [Framing Stabilizer] → desired setting.**

Menu item details

On:
[Framing Stabilizer] is enabled.
Selects [On: Center], which locks the composition so that the subject being tracked is in the center, or [On: Manual], which requires you to manually set the position to which the subject being tracked is locked.

- When [On: Manual] is selected, you can lock/unlock the position of the subject by touching (composition lock icon) on the screen or pressing the center of the control wheel.

Off:
[Framing Stabilizer] is disabled.

Hint

- When the subject is moving, keeping the camera aimed at the subject while shooting will make it easier to correct the composition.
- With [Framing Stabilizer], the angle of view becomes narrower because cropping is performed using images in 4K resolution.
- To avoid deterioration of the image quality, it is recommended that you set [File Format] to HD image quality when using [Framing Stabilizer].

Note

- The camera may focus on a subject outside the area cropped with [Framing Stabilizer].
- It may not be possible to correct the composition depending on the movement of the subject.
- Depending on the settings for [File Format] and [Movie Settings], the angle of view may change when [Framing Stabilizer] is set to [On].

TP1002156997

5-069-971-11(6) Copyright 2026 Sony Corporation

Interchangeable Lens Digital Camera
ILCE-7M5 α7V

Selecting the focus method (Focus Mode)

Selects the focus method to suit the movement of the subject.

1. **MENU → AF/MF (Focus) → [AF/MF] → [Focus Mode] → desired setting.**

Menu item details

AF-S Single-shot AF:
The product locks the focus once focusing is complete. Use this when the subject is motionless.

AF-A Automatic AF:
[Single-shot AF] and [Continuous AF] are switched according to the movement of the subject. When the shutter button is pressed halfway down, the product locks the focus when it determines that the subject is motionless, or continues to focus when the subject is in motion. During continuous shooting, the product automatically shoots with [Continuous AF] from the second shot.

AF-C Continuous AF:
The product continues to focus while the shutter button is pressed and held halfway down. Use this when the subject is in motion. In [Continuous AF] mode, there is no beep when the camera focuses.

DMF DMF:
You can make fine adjustments manually after performing auto focusing, letting you focus on a subject more quickly than when using [Manual Focus] from the beginning. This is convenient in situations such as macro shooting.

MF Manual Focus:
Adjusts the focus manually. If you cannot focus on the intended subject using auto focus, use [Manual Focus].

Focus indicator

● (lit):
The subject is in focus and the focus is locked.
● (flashing):
The subject is not in focus.
(lit):
The subject is in focus. The focus will be adjusted continuously according to the movements of the subject.
(lit):
Focusing is in progress.

Subjects on which it is difficult to focus using auto focus

- Dark and distant subjects
- Subjects with poor contrast
- Subjects seen through glass
- Fast-moving subjects
- Reflective light or shiny surfaces
- Flashing light

- Back-lit subjects
- Continuously repetitive patterns, such as the facades of buildings
- Subjects in the focusing area with different focal distances

To always enable manual focusing operations when shooting still images (Full Time DMF)

If you set [Full Time DMF] to [On], you can perform manual focusing operations regardless of the focus mode setting. You can use both the auto and manual focus without changing the focus mode setting.
(You cannot switch to manual focus while shooting continuously in the [Continuous AF] mode.)

Hint

- In [Continuous AF] mode, you can lock the focus by pressing and holding the button that has been assigned the [Focus Hold] function.
- When you set the focus to infinity in [Manual Focus] mode or [DMF] mode, make sure that the focus is on a sufficiently distant subject by checking the monitor or the viewfinder.

Note

- [Automatic AF] is available only when you are using a lens that supports phase detection AF.
- When [Continuous AF] or [Automatic AF] is set, the angle of view may change little by little while focusing.
- Only [Continuous AF] and [Manual Focus] are available when shooting movies or when the Still/Movie/S&Q dial is set to ▶■ (Movie) or S&Q (S&Q Motion).

Related Topic

- Direct manual focus (DMF)
- Manual Focus
- Full Time DMF
- Selecting the focus area (Focus Area)
- Assigning frequently used functions to buttons and dials (Custom Key/Dial Set.)

TP1002142805

5-069-971-11(6) Copyright 2026 Sony Corporation

Selecting the focus area (Focus Area)

Set the type of focusing frame when shooting with the auto focus. Select the mode according to the subject.

1. **MENU → AF/MF (Focus) → [Focus Area] → [Focus Area] → desired setting.**

Menu item details

Wide:
Focuses on a subject covering the whole range of the screen automatically. When you press the shutter button halfway down in the still image shooting mode, a green frame is displayed around the area that is in focus.

Zone:
Select a zone on the monitor on which to focus, and the product will automatically select a focus area.

Center Fix:
Focuses automatically on a subject in the center of the image. Use together with the focus-lock function to create the composition you want.

Spot: XL/Spot: L/Spot: M/Spot: S/Spot: XS :
Allows you to move the focusing frame to a desired point on the screen and focus on an extremely small subject in a narrow area.

Expand Spot:
If the product cannot focus on a single selected point, it uses focus points around the [Spot] as a secondary priority area for focusing.

Custom 1/Custom 2/Custom 3:
Allows you to set the shape and size of the focusing area.

Tracking:
This setting is available only when the [Focus Mode] is set to [Continuous AF]. When the shutter button is pressed and held halfway down, the product tracks the subject within the selected autofocus area. Point the cursor at [Tracking] on the [Focus Area] setting screen, and then select the desired area to start tracking using the left/right sides of the control wheel. You can also move the tracking start area to the desired point by designating the area as [Tracking: Zone], [Tracking: Spot XL]/[Tracking: Spot L]/[Tracking: Spot M]/[Tracking: Spot S]/[Tracking: Spot XS], [Tracking: Expand Spot], or [Tracking: Custom 1] through [Tracking: Custom 3].

Hint

- In the default settings, [Focus Area] is assigned to the C2 button.

Note

- [Focus Area] is locked to [Wide] in the following situations:

— [Intelligent Auto]

- The focus area may not light up during continuous shooting or when the shutter button is pressed all the way down at once.
- When the Still/Movie/S&Q dial is set to (Movie) or S&Q (S&Q Motion) or during movie shooting, [Tracking] cannot be selected for [Focus Area].
- [Spot: XS] under [Focus Area] cannot be selected when shooting in the APS-C size. Also, when [Focus Area] is set to [Custom 1] - [Custom 3], the size of the focus frame cannot be set smaller than that of [Spot: S].

Examples of the focusing frame display

The focusing frame differs as follows.

When focusing on a larger area

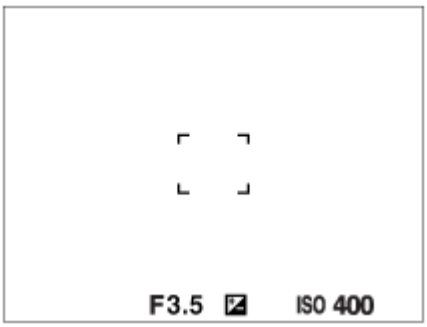

When focusing on a smaller area

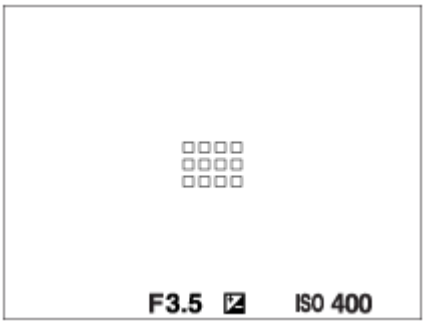

- When [Focus Area] is set to [Wide] or [Zone], the focusing frame may switch between “When focusing on a larger area” and “When focusing on a smaller area” depending on the subject or situation.
- When [Focus Area] is set to [Custom], the focusing frame may switch to “When focusing on a smaller area” if either the vertical or horizontal side of the focus area is longer than the side of the focusing frame for [Spot: XL].

When focus is achieved automatically based on the whole range of the monitor

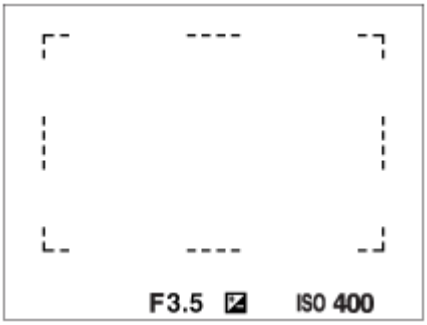

- When you use a zoom function other than the optical zoom in the still image shooting mode, the [Focus Area] setting is disabled and the focusing frame is shown by the dotted line. The AF operates with priority on and around the center area.

To change the shape and size of the focus area ([Custom])

If you press the 🗑 (Delete) button on the screen when an option from [Custom 1] to [Custom 3] is selected for [Focus Area], a screen for setting the shape and size of the focus frame will be displayed. Use the front dial/rear dial L/control wheel to set the shape and size of the focus frame.
Front dial: Changes the height of the focus frame.
Rear dial L: Changes the width of the focus frame.
Rotating the control wheel: Enlarges/reduces the size of the focus frame.

- The shape and size of the focus frame can also be set using touch operations. Drag the four corners or sides of the focus frame. You can also enlarge/reduce the size of the focus frame by pinching in/out on the monitor.
- You can change the position of the focus frame with the multi selector or the top/bottom/left/right of the control wheel.
- Press the 🗑 (Delete) button to return the focus frame shape and size to the default settings.

To move the focus area

- You can move the focus area by operating the multi-selector when [Focus Area] is set to the following parameters:
  - [Zone]
  - [Spot: XL]/[Spot: L]/[Spot: M]/[Spot: S]/[Spot: XS]
  - [Expand Spot]
  - [Custom 1] - [Custom 3]
  - [Tracking: Zone]
  - [Tracking: Spot XL]/[Tracking: Spot L]/[Tracking: Spot M]/[Tracking: Spot S]/[Tracking: Spot XS]
  - [Tracking: Expand Spot]
  - [Tracking: Custom 1] - [Tracking: Custom 3]

  If you assign [Focus Standard] to the center of the multi-selector beforehand, you can move the focusing frame back to the subject being tracked or the center of the monitor by pressing the center of the multi-selector.

Hint

- When [Focus Area] is set to one of the following, you can move the focusing frame over a greater distance at a time by setting [AF Frame Move Amt] to [Large].
  - [Spot]
  - [Expand Spot]
  - [Custom 1] - [Custom 3]
- You can move the focusing frame quickly by touching and dragging it on the monitor. Set [Touch Operation] to [On], and set [Touch Func. in Shooting] under [Shooting Screen] in [Touch Panel Settings] to [Touch Focus] beforehand.

To track the subject temporarily when shooting still images and movies (Tracking On)

You can temporarily change the setting for [Focus Area] to [Tracking] while pressing and holding down the custom key to which you have assigned [Tracking On] with [Custom Key/Dial Set.] or [Custom Key/Dial Set.] in advance. The [Focus Area] setting before you activated [Tracking On] will switch to the equivalent [Tracking] setting.
For example:

[Focus Area] before you activate [Tracking On]	[Focus Area] while [Tracking On] is active
[Wide]	[Tracking: Wide]
[Spot: S]	[Tracking: Spot S]
[Expand Spot]	[Tracking: Expand Spot]

Hint

- When [Tracking On + AF On] or [Tracking On [ ] + AF ON] is assigned to a custom key using [Custom Key/Dial Set.], while the custom key is pressed during still image shooting, autofocus works simultaneously with tracking to keep the subject in focus.
  [Tracking On + AF On]: Tracks the subject in the focus area according to the setting for [Focus Area] before you pressed the custom key.
  [Tracking On [ ] + AF ON]: Tracks the subject in the center of the screen despite the setting for [Focus Area] before you pressed the custom key.

Phase detection AF

When there are phase detection AF points within the auto focus area, the product uses the combined autofocus of the phase detection AF and contrast AF.

Note

- Phase detection AF is available only when a compatible lens is attached. If you use a lens that does not support phase detection AF, you cannot use the following functions.

  — [Automatic AF]
  — [AF Lvl for Crossing]
  — [AF Trk for Spd Chng]
  — [AF Subj. Shift Sensitivity]
  — [AF Transition Speed]

  Also, even if you use a previously purchased applicable lens, the phase detection AF might not function unless you update the lens.

Related Topic

- Selecting the focus method (Focus Mode)
- Touch Operation
- Touch Panel Settings
- Focusing using touch operations (Touch Focus)
- Adjusting the focus area settings to the camera's orientation (horizontal/vertical) (Switch V/H AF Area)
- Registering the current focus area (AF Area Registration)

TP1002133992

5-069-971-11(6) Copyright 2026 Sony Corporation

Tracking subject (Tracking function)

This camera has the function of tracking which tracks the subject, and keeps marking it with the focusing frame.
You can set the start position to track by selecting from focusing areas, or by specifying by touch operation. The required function varies depending on the setting method.

- You can refer to the related functions under “Related Topic” at the bottom of this page.

Setting the start position to track by focusing area ([Tracking] under [Focus Area])

The selected focusing frame is set as the start position to track, and the tracking starts by pressing the shutter button halfway down.

- This function is available in still image shooting mode.
- This function is available when [Focus Mode] is set to [Continuous AF].

Setting the start position to track by touch operation ([Touch Tracking] under [Touch Func. in Shooting])

You can set the subject to track by touching it on the monitor.

- This function is available in still image shooting mode and movie shooting mode.

- You can use this function for shooting still images when [Focus Mode] is set to [Single-shot AF], [Automatic AF], [Continuous AF], or [DMF].
- You can use this function for shooting movies when [Focus Mode] is set to [Continuous AF] or [Manual Focus].

Changing the setting for [Focus Area] to [Tracking] temporarily ([Tracking On] by Custom Key)

Even [Focus Area] is set to other than [Tracking], you can temporarily change the setting for [Focus Area] to [Tracking] while pressing and holding the key to which you have assigned [Tracking On] function.

- Assign the [Tracking On] function to a desired key using [Custom Key/Dial Set.] or [Custom Key/Dial Set.] in advance.
- This function is available in still image shooting mode and movie shooting mode.

- You can use this function for shooting still images when [Focus Mode] is set to a value other than [Manual Focus]. [Focus Mode] is temporarily set to [Continuous AF] while the custom key is pressed.
- You can use this function for shooting movies when [Focus Mode] is set to [Continuous AF] or [Manual Focus].

Hint

- When [Tracking On + AF On] or [Tracking On [ ] + AF ON] is assigned to a custom key using [Custom Key/Dial Set.], while the custom key is pressed during still image shooting, autofocus works simultaneously with tracking to keep the subject in focus.
  [Tracking On + AF On]: Tracks the subject in the focus area according to the setting for [Focus Area] before you pressed the custom key.
  [Tracking On [ ] + AF ON]: Tracks the subject in the center of the screen despite the setting for [Focus Area] before you pressed the custom key.

Temporarily pausing the tracking function

By pressing the key to which you assigned [Tracking Off on Hold] or [Tracking Off on Toggle] using [Custom Key/Dial Set.], you can temporarily pause the tracking function.

Use this function when you are in a shooting situation where it is difficult to keep tracking, or when the tracking frame switches to another subject.
If you press the key to which you assigned [Track Recog Off on Hold] or [Track Recog Off Toggle] using [Custom Key/Dial Set.], [Subject Recog in AF] will temporarily switch to [Off], suspending tracking of the recognized subject.
Use this function when the tracking frame switches to an unintended subject.

Related Topic

- Selecting the focus method (Focus Mode)
- Selecting the focus area (Focus Area)
- Starting tracking with touch operations (Touch Tracking)
- Assigning frequently used functions to buttons and dials (Custom Key/Dial Set.)

TP1002149641

5-069-971-11(6) Copyright 2026 Sony Corporation

Manual Focus

When it is difficult to focus properly in the autofocus mode, you can adjust the focus manually.

1. **MENU → AF/MF (Focus) → [AF/MF] → [Focus Mode] → [Manual Focus].**

2. **Rotate the focusing ring to achieve sharp focus.**
   - When you shoot a still image, you can display the focus distance on the screen by rotating the focusing ring. The focus distance is not displayed when the Mount Adaptor (sold separately) is attached.

Hint

- If you set [Full Time DMF] to [On], you can perform manual focusing operations when shooting still images, regardless of the focus mode setting.

Note

- When you use the viewfinder, adjust the diopter level to obtain the correct focus on the viewfinder.
- The displayed focus distance is just a reference.

Related Topic

- Direct manual focus (DMF)
- Full Time DMF
- Auto Magnifier in MF
- Focus Magnifier
- Peaking Display

TP1002110521

5-069-971-11(6) Copyright 2026 Sony Corporation

Direct manual focus (DMF)

You can make fine adjustments manually after performing auto focusing, letting you focus on a subject more quickly than when using the manual focus from the beginning. This is convenient in situations such as macro shooting.

1. **MENU → AF/MF (Focus) → [AF/MF] → [Focus Mode] → [DMF].**
2. **Press the shutter button halfway down to focus automatically.**
3. **Keep the shutter button pressed halfway down, and then rotate the focusing ring to achieve a sharper focus.**
   - When you rotate the focusing ring, the focus distance is displayed on the screen.
     The focus distance is not displayed when the Mount Adaptor (sold separately) is attached.
4. **Press the shutter button fully down to shoot an image.**

Hint

- If you set [Full Time DMF] to [On], you can always perform manual focusing operations without setting the focus mode to [DMF]. (You cannot switch to manual focus while shooting continuously in the [Continuous AF] mode.)

Related Topic

- Manual Focus
- Full Time DMF
- Peaking Display

TP1002110522

5-069-971-11(6) Copyright 2026 Sony Corporation

Focusing using subject recognition functions

If you set the subject in advance, the camera will automatically recognize the subject and can focus on the eyes, etc. when shooting images.
This table describes two methods to focus and shoot using subject recognition. Select the appropriate method according to your purpose.

Item	[Subject Recog in AF] function	[Subject Recognition AF] via a custom key
Advance preparation	• Select [Subject Recog in AF] → [On]. • Select [Auto], [Human], [Animal/Bird], [Animal], [Bird], [Insect], [Car/Train], or [Airplane] for [Recognition Target].	• Assign [Subject Recognition AF] to the desired key using [Custom Key/Dial Set.] or [Custom Key/Dial Set.]. • Select [Auto], [Human], [Animal/Bird], [Animal], [Bird], [Insect], [Car/Train], or [Airplane] for [Recognition Target].
How to focus	Press the shutter button halfway down.*1	Press the key to which you have assigned the [Subject Recognition AF] function.*2
Function details	• The camera focuses on the eye, head, body, or entirety of the subject recognized in or around the designated [Focus Area]. • If the camera does not recognize any subjects in or around the designated [Focus Area], normal auto-focusing will be performed.	• The camera focuses on the recognized subject's eye, head, or body or the entirety of the subject anywhere on the screen, regardless of the setting for [Focus Area]. • The camera will not perform auto-focusing if no subjects are recognized anywhere on the screen.
Focus mode	Follows the setting designated with [Focus Mode]	Follows the setting designated with [Focus Mode]
Focus area	Follows the setting designated with [Focus Area]	The focus area temporarily becomes the entire screen, regardless of the setting for [Focus Area].

*1 This operation is for focusing when shooting still images. When shooting movies, the camera will focus on the recognized subject, even if you do not press the shutter button.
*2 Regardless of whether [Subject Recog in AF] is set to [On] or [Off], if you have assigned [Subject Recognition AF] to a custom key, you can use [Subject Recognition AF] while you are pressing that custom key.

To focus on the eyes of an animal or a bird

Before shooting, set [Recognition Target] to [Animal], [Bird], or [Animal/Bird] according to the subject. You can select [Eye/Head/Body], [Eye/Head], or [Eye] as the desired part to be recognized with priority in the still image shooting mode.

To focus on insects

Before shooting, set [Recognition Target] to [Insect].

To focus on cars, trains, or airplanes

Before shooting, set [Recognition Target] to [Car/Train] or [Airplane].

To leave the switching of recognition targets up to the camera for shooting

Set [Recognition Target] to [Auto] and shoot the images.

Hint

- Setting [Sbj Recog Frm Disp.]/[Sbj Recog Frm Disp.] to [On] makes it easier to check the detection status of faces or eyes, etc.
- [Subject Recognition AF] using a custom key is convenient in the following cases.
  - When you want to temporarily use [Subject Recognition AF] on the entire screen only while pressing the key, regardless of the [Focus Area] setting
  - When you do not want to perform auto-focusing when the camera does not recognize a subject
- Positioning the entire subject in the angle of view makes the subject easier to recognize.

Note

- It may be difficult to focus on the subject in the following situations:
  - In low-light or back-lit conditions.
  - When the subject is in the shade.
  - When the subject is out of focus.
  - When the subject is moving too much, etc.
- It may be difficult to focus on eyes in the following situations even when the camera recognizes eyes:
  - When the eyes are closed.
  - When the eyes are covered by hair, etc.
  - When the person is wearing sunglasses.
- There are also other situations in which it may not be possible to focus on the subjects.
- When the camera cannot focus on the part you want to prioritize, such as the eyes of the subject, the camera may automatically focus on other recognized parts such as the head or body of the subject.
- Even when a white subject recognition frame is displayed around the subject's face, etc., the camera may automatically focus on the part you want to prioritize, such as the subject's eye.
- The subject may not be recognized when only a part of the subject is within the angle of view.
  - When only the hands and feet of a person or animal are visible
  - When a part of the subject is hidden and cannot be seen, etc.
- The camera may accidentally recognize other objects as the designated subject under some conditions.
- When [Recognition Target] is set to [Auto], the camera automatically determines the recognition target, so depending on the situation, the recognized subject may differ from the intended one. By setting [Recognition Target] to the desired subject, you may be able to resolve the issue of unintended subjects being recognized.

Related Topic

- Subject Recog in AF (still image/movie)
- Recognition Target (still image/movie)
- Recog Trgt Select Set (still image/movie)
- Right/Left Eye Select (still image/movie)
- Sbj Recog Frm Disp. (still image)
- Selecting the focus method (Focus Mode)
- Selecting the focus area (Focus Area)

TP1002154713

5-069-971-11(6) Copyright 2026 Sony Corporation

Subject Recog in AF (still image/movie)

S&Q

Sets whether to recognize and focus on subjects in the focus area when autofocusing.

1. **MENU→ AF/MF (Focus) → [Subject Recognition] → [Subject Recog in AF] → desired setting.**

Menu item details

On:
Focuses on a subject with priority if it has been recognized inside or around the designated focus area.

Off:
Does not recognize subjects when autofocusing.

Hint

- By combining the [Subject Recog in AF] function with [Focus Area] → [Tracking], you can maintain the focus on a moving subject.
- When [Subject Recog in AF] is assigned to the desired key using [Custom Key/Dial Set.] or [Custom Key/Dial Set.], you can switch the [Subject Recog in AF] function on or off by pressing the key.
- By assigning [Recognition Off on Hold] or [Recog. Off on Toggle] to the desired key with [Custom Key/Dial Set.], you can switch [Subject Recog in AF] to [Off] temporarily using the key.

Note

- If the camera does not recognize the subject specified with [Recognition Target] in or around the designated focus area, it will focus on another subject.
- When the shooting mode is set to [Intelligent Auto], [Subject Recog in AF] is locked to [On].

Related Topic

- Focusing using subject recognition functions
- Recognition Target (still image/movie)
- Recog Trgt Select Set (still image/movie)
- Right/Left Eye Select (still image/movie)
- Assigning frequently used functions to buttons and dials (Custom Key/Dial Set.)

TP1002154714

5-069-971-11(6) Copyright 2026 Sony Corporation

Recognition Target (still image/movie)

S&Q

Selects the target to be recognized by the subject recognition function when autofocusing.

1. **MENU → AF/MF (Focus) → [Subject Recognition] → [Recognition Target] → desired setting.**

Menu item details

Auto:
The camera will automatically select and recognize a subject from among the recognition targets to which check marks were added on the [Auto Recog. Target] screen.

Human:
Recognizes humans as subjects.

Animal/Bird:
Recognizes animals and birds as subjects.

Animal:
Recognizes animals as subjects.

Bird:
Recognizes birds as subjects.

Insect:
Recognizes insects as subjects.

Car/Train:
Recognizes cars and trains as subjects.

Airplane:
Recognizes airplanes as subjects.

To narrow down the types of recognition targets when using the [Auto] setting

Set [Recognition Target] to [Auto] and press the right side of the control wheel to display the [Auto Recog. Target] screen. Uncheck any subjects you do not want the camera to automatically recognize. One of the checked subjects will be automatically recognized.

Detailed settings for each recognition target

By pressing the right side of the control wheel on the [Recognition Target] screen, you can make detailed settings for each recognition target. Even when [Recognition Target] is set to [Auto], you can configure detailed settings for each recognition target on the [Auto Recog. Target] screen. Functions other than [Recognition Priority Set.] can only be set in the still image shooting mode.

Tracking Shift Range *1 *5**:**
Sets the range for recognizing the subjects. Narrowing the range makes the camera shift the focus to a recognized subject only when the subject is close to the tracking frame. Widening the range makes the camera shift the focus to a recognized subject even when the subject is distant from the tracking frame. ([1(Narrow)] to [5(Wide)])

Tracking Persistence Lvl *2 *5**:**

Sets the sensitivity for whether to continue tracking around the subject or shift the focus to another subject that is closer in shooting distance when a recognized subject is lost.
When set to [5(Locked On)], even under conditions where a recognized subject is lost, such as when the subject that you want to shoot is temporarily hidden by another object, the camera continues to track the area around the subject.
When set to [1(Not Locked On)], under conditions where the camera cannot continue to track a recognized subject, such as when the subject is moving fast, the camera cancels tracking and quickly shifts the focus to another subject that is closer in shooting distance.

Recognition Sensitivity [*2] [*5]:
Sets the sensitivity of subject recognition. The lower the setting, the easier it is to prevent false recognition. The higher the setting, the easier it is to recognize subjects that are normally difficult. ([1(Low)] to [5(High)])

Recognition Priority Set. [*3]:
Sets which to prioritize when animals and birds are recognized at the same time. ([Auto]/[Priority on Animals]/[Priority on Birds])

Recognition Part [*4]:
Sets the part to be recognized. ([Eye/Head/Body]/[Eye/Head]/[Eye]/[Follow Individ. Set.] [*3])

Recog. Part Sel. Settings [*4]:
When [Recognition Part Select] is assigned to a custom key, this sets the recognized part that can be switched with the custom key. ([Eye/Head/Body]/[Eye/Head]/[Eye]/[Follow Individ. Set.] [*3])

*1 Available for [Human]/[Animal]/[Bird]/[Insect]/[Car/Train]/[Airplane]
*2 [Animal]/[Bird]/[Insect]/[Car/Train]/[Airplane] only
*3 [Animal/Bird] only
*4 [Animal/Bird]/[Animal]/[Bird] only
*5 When the recognition target is set to [Animal/Bird], these settings can be adjusted from the [Animal: Detailed Setting] or [Bird: Detailed Settings] screen.

Hint

- To recognize animal or bird eyes, compose the shot so that the entire head is within the angle of view. Once you focus on the animal's or bird's head, the eyes will be recognized more easily.
- If you register [Recognition Part] in the function menu, you can change the setting while shooting a still image.
- If the camera recognizes an unintended subject when set to [Auto], try one of the following methods:
  - Uncheck unnecessary subjects in [Auto Recog. Target].
  - Set [Recognition Target] to the target you want to recognize instead of [Auto].
  - Set [Focus Area] to an item other than [Wide] and align the focus frame with the subject you want to recognize.
  - Touch the subject you want to recognize (when [Touch Func. in Shooting] is set to [Touch Tracking]).

  If these methods do not improve the situation, you can temporarily disable [Subject Recog in AF] by using the custom key to which [Recognition Off on Hold] or [Recog. Off on Toggle] is assigned.

Note

- When [Recognition Target] is set to other than [Human], the following functions cannot be used.
  - Face Priority in Multi Metering
  - Regist. Face Priority
- Some types of subjects cannot be recognized in line with the [Recognition Target] setting. Also, subjects other than the target you have set may be recognized as the subject in some cases. If this occurs, set [Focus Area] to [Zone] or [Spot] and move the focus frame closer to the subject to make it easier to recognize the subject.

Related Topic

- Focusing using subject recognition functions
- Subject Recog in AF (still image/movie)

TP1002154715

5-069-971-11(6) Copyright 2026 Sony Corporation

Recog Trgt Select Set (still image/movie)

S&Q

Sets the types of recognition targets that are available when using the custom key to which [Recog. Target Select] is assigned.

1. **MENU → AF/MF (Focus) → [Subject Recognition] → [Recog Trgt Select Set] → Add check marks to the recognition targets that you want to select, and then select [OK].**

   The types of targets marked with ✓ (check mark) will be available as settings.

Hint

- Assign [Recog. Target Select] to the desired key using [Custom Key/Dial Set.] or [Custom Key/Dial Set.].
- You can select the types of targets to which you did not add a check mark in [Recog Trgt Select Set] by selecting MENU → AF/MF (Focus) → [Subject Recognition] → [Recognition Target].

Related Topic

- Recognition Target (still image/movie)
- Assigning frequently used functions to buttons and dials (Custom Key/Dial Set.)

TP1002154716

5-069-971-11(6) Copyright 2026 Sony Corporation

Right/Left Eye Select (still image/movie)

S&Q

Sets whether to focus on the left or right eye when [Recognition Target] is set to [Human] or [Animal].

1. **MENU → AF/MF (Focus) → [Subject Recognition] → [Right/Left Eye Select] → desired setting.**

Menu item details

Auto:
The camera automatically selects either the left eye or right eye.

Right Eye:
The right eye of the subject (the eye on the left side from the photographer's perspective) is selected.

Left Eye:
The left eye of the subject (the eye on the right side from the photographer's perspective) is selected.

[Switch Right/Left Eye] by custom key

You can also switch between focusing on the right eye and left eye with the custom key.
When [Right/Left Eye Select] is set to [Right Eye] or [Left Eye], you can switch the eye on which the camera will focus by pressing the custom key to which you have assigned the [Switch Right/Left Eye] function.
When [Right/Left Eye Select] is set to [Auto], you can temporarily switch the eye to be focused by pressing the custom key to which you have assigned the [Switch Right/Left Eye] function.
The temporary left/right selection is canceled when you perform the following operations, etc. The camera returns to automatic eye selection.

- Pressing the center of the control wheel
- Pressing the center of the multi-selector
- Stopping pressing the shutter button halfway down (only during still image shooting)
- Stopping pressing the custom key to which [AF On] or [Subject Recognition AF] is assigned (only during still image shooting)
- Pressing the MENU button

Hint

- When [Sbj Recog Frm Disp.]/[Sbj Recog Frm Disp.] is set to [On], the eye recognition frame appears around the eye you selected using the [Right/Left Eye Select] menu or using the [Switch Right/Left Eye] function activated by the custom key.

Related Topic

- Focusing using subject recognition functions
- Subject Recog in AF (still image/movie)
- Recognition Target (still image/movie)
- Sbj Recog Frm Disp. (still image)

TP1002154717

5-069-971-11(6) Copyright 2026 Sony Corporation

Sbj Recog Frm Disp. (still image)

Sets whether to display a subject recognition frame when a subject is recognized.

1. **MENU → AF/MF (Focus) → [Subject Recognition] → [Sbj Recog Frm Disp.] → desired setting.**

Menu item details

On:
Displays a recognition frame when a subject is recognized.

Off:
Does not display a recognition frame when a subject is recognized.

Subject recognition frame

When the camera recognizes a subject and determines that the subject is a target for auto-focusing, the white subject-recognition frame appears.
The recognition frame is automatically prioritized and displayed where a more precise recognition target (such as eyes) is recognized.

When [Human] is selected:
When the camera recognizes a subject, the white or gray subject-recognition frame appears around the eye, face, or body.

When [Animal/Bird], [Animal], or [Bird] is selected:
When the camera recognizes a subject, the white subject-recognition frame appears around the eye, head, or body.

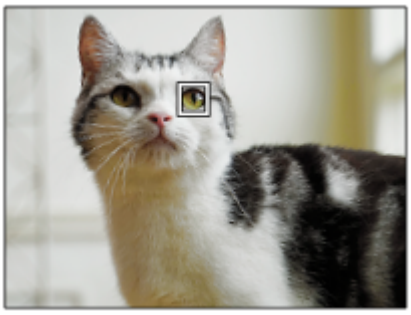

When [Insect] is selected:
When the camera recognizes a subject, the white subject-recognition frame appears around the head or the entire subject.

When [Car/Train] or [Airplane] is selected:
When the camera recognizes a subject, the white subject-recognition frame appears around the front part of the train or the nose of the airplane or around the entire subject.

Note

- If the subject is not recognized, the subject recognition frame will not be displayed.
- If the subject or the camera is moving too much, the recognition frame may not be displayed correctly over the subject.
- Even if [Sbj Recog Frm Disp.] is set to [Off], a green recognition frame will appear over the subject that is in focus when you press the shutter button halfway down, etc.

Related Topic

- Focusing using subject recognition functions
- Subject Recog in AF (still image/movie)
- Recognition Target (still image/movie)
- Right/Left Eye Select (still image/movie)
- Face Memory (still image/movie)

TP1002154718

5-069-971-11(6) Copyright 2026 Sony Corporation

Sbj Recog Frm Disp. (movie)

Sets whether to display a subject recognition frame when a subject is recognized.

1. **MENU → AF/MF (Focus) → [Subject Recognition] → [Sbj Recog Frm Disp.] → desired setting.**

Menu item details

On:
Displays a recognition frame when a subject is recognized.

Off:
Does not display a recognition frame when a subject is recognized.

Subject recognition frame

When the camera recognizes a subject and determines that the subject is a target for auto-focusing, the white subject-recognition frame appears.
The recognition frame is automatically prioritized and displayed where a more precise recognition target (such as eyes) is recognized.

When [Human] is selected:
When the camera recognizes a subject, the white or gray subject-recognition frame appears around the eye, face, or body.

When [Animal/Bird], [Animal], or [Bird] is selected:
When the camera recognizes a subject, the white subject-recognition frame appears around the eye, head, or body.

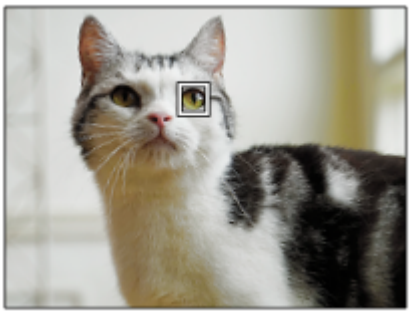

When [Insect] is selected:
When the camera recognizes a subject, the white subject-recognition frame appears around the head or the entire subject.

When [Car/Train] or [Airplane] is selected:
When the camera recognizes a subject, the white subject-recognition frame appears around the front part of the train or the nose of the airplane or around the entire subject.

Note

- If the subject is not recognized, the subject recognition frame will not be displayed.
- If the subject or the camera is moving too much, the recognition frame may not be displayed correctly over the subject.
- Even if [▶■ Sbj Recog Frm Disp.] is set to [Off], a green recognition frame will appear over the subject that is in focus when you press the shutter button halfway down, etc.

Related Topic

- Focusing using subject recognition functions
- Subject Recog in AF (still image/movie)
- Recognition Target (still image/movie)
- Right/Left Eye Select (still image/movie)
- Face Memory (still image/movie)

TP1002156621

5-069-971-11(6) Copyright 2026 Sony Corporation

Face Memory (still image/movie)

S&Q

This function registers and deletes face data and sets whether to identify registered faces. Up to seven faces can be registered. If you set one of the registered faces as the identification target, the face will be prioritized when focusing.

1. **MENU → AF/MF (Focus) → [Subject Recognition] → [Face Memory].**
2. **On the [Face Memory] list screen, select the + icon frame and press the center of the control wheel.**
3. **Position the face you want to register in the frame in the center of the screen and press the center of the control wheel.**

   The registered face will be displayed on the [Face Memory] list screen.

To choose a face to identify

Select the face you want to identify on the [Face Memory] list screen and press the center of the control wheel. The radio button for the face set as the identification target will turn on.

To delete a registered face

Select the face you want to delete on the [Face Memory] list screen and press the (Delete) button. Then, select [Delete This Face]. If you select [Delete All Faces], all registered faces will be deleted.

Note

- When performing [Face Memory], do so in a bright place with the subject facing forward. It will be easier to register a face if you position it inside the frame in the center of the monitor and position the neck and shoulders under the frame. If the face is hidden by a hat, mask, sunglasses, etc. or the neck or shoulders are hidden, you may not be able to register it correctly.
- Even if you perform [Delete This Face], the registered face data will remain in the camera. If you want to delete it from the camera as well, perform [Delete All Faces].
- Faces registered through the [Face Memory] function are considered biometric information. Users are responsible for collecting and using such data and for complying with the laws and regulations of the relevant country or region. For more information, visit the following website.
  https://www.sony.net/dics/privacy

Related Topic

- Regist. Face Priority (still image/movie)

TP1002154671

5-069-971-11(6) Copyright 2026 Sony Corporation

Regist. Face Priority (still image/movie)

Sets whether to focus with higher priority on a selected face using [Face Memory].

1. **MENU → AF/MF (Focus) → [Subject Recognition] → [Regist. Face Priority] → desired setting.**

Menu item details

On:
Focuses on a face identified in the [Face Memory] menu with priority.

Off:
Focuses on faces without prioritizing the selected face.

Hint

- To use the [Regist. Face Priority] function, set as follows.
  - [Subject Recog in AF] under [Subject Recognition]: [On]
  - [Recognition Target] under [Subject Recognition]: [Human]
- If you assign [Regist. Face Priority] to a custom key, you can switch [Regist. Face Priority] between [On] and [Off] each time you press the key.
- If you assign [Switch Ident. Target] to a custom key, you can switch the face to be identified each time you press the key.

Related Topic

- Subject Recog in AF (still image/movie)
- Recognition Target (still image/movie)
- Face Memory (still image/movie)

TP1002154672

5-069-971-11(6) Copyright 2026 Sony Corporation

Interchangeable Lens Digital Camera
ILCE-7M5 α7V

Selecting a person to track (Select Face to Track)

When the camera recognizes multiple people, you can choose which person to track.

1. **MENU → AF/MF (Focus) → [Focus Area] → [Focus Area] → [Wide] or [Center Fix].**

2. **Press the top/bottom/left/right sides of the multi-selector while multiple people are recognized.**

The [Select Face to Track] screen will appear, and an orange bar will be displayed below the face to be tracked.

3. **Select a face to track using the multi-selector and press the center.**

The orange bar will move to the selected face. Once the selection is confirmed, exit the [Select Face to Track] screen and start tracking the selected face.

Hint

- Even when [Focus Area] is set to an item other than [Wide] or [Center Fix], you can use a custom key for [Select Face to Track]. Assign [Select Face to Track] to the desired key using [Custom Key/Dial Set.] or [Custom Key/Dial Set.] in advance. The [Select Face to Track] screen appears when you press the key to which [Select Face to Track] is assigned.

Note

- To use the [Select Face to Track] function, set as follows.
  - [Subject Recog in AF] under [Subject Recognition]: [On]
  - [Recognition Target] under [Subject Recognition]: [Human]
- [Select Face to Track] is unavailable in the following situations:
  - When [Focus Mode] is set to [Manual Focus] in still image shooting mode
  - When using the Smart Zoom, Clear Image Zoom and Digital Zoom in still image shooting mode

Related Topic

- Assigning frequently used functions to buttons and dials (Custom Key/Dial Set.)

TP1002154712

5-069-971-11(6) Copyright 2026 Sony Corporation

Focus Standard

S&Q

If you press the key to which [Focus Standard] is assigned, you can recall useful functions such as automatically focusing on a subject in the center of the screen in accordance with the focus area settings.

1. **MENU → (Setup) → [Operation Customize] → [Custom Key/Dial Set.] or [Custom Key/Dial Set.] → desired key, then assign the [Focus Standard] function to the key.**

2. **Press the key to which [Focus Standard] is assigned.**
   - What you can do by pressing the key varies depending on the setting for [Focus Area].

Examples of [Focus Standard] key functions

- When [Focus Area] is set to any of the following parameters, pressing the key moves the focusing frame back to the center of the monitor or to the subject you are tracking:
  - [Zone]
  - [Spot: XL]/[Spot: L]/[Spot: M]/[Spot: S]/[Spot: XS]
  - [Expand Spot]
  - [Custom 1] - [Custom 3]
  - [Tracking: Zone]
  - [Tracking: Spot XL]/[Tracking: Spot L]/[Tracking: Spot M]/[Tracking: Spot S]/[Tracking: Spot XS]
  - [Tracking: Expand Spot]
  - [Tracking: Custom 1] - [Tracking: Custom 3]
- When [Focus Area] is set to [Wide], [Center Fix], [Tracking: Wide], or [Tracking: Center Fix], pressing the key in the autofocus mode makes the camera focus on the center of the screen. If you press the key while recording a movie with manual focus, you can temporarily switch to autofocus and focus on the center of the screen.

Note

- You cannot set the [Focus Standard] function to [Left Button], [Right Button] or [Down Button] of the control wheel.

Related Topic

- Assigning frequently used functions to buttons and dials (Custom Key/Dial Set.)
- Selecting the focus area (Focus Area)

TP1002142851

5-069-971-11(6) Copyright 2026 Sony Corporation

Interchangeable Lens Digital Camera
ILCE-7M5 α7V

Adjusting the focus area settings to the camera's orientation (horizontal/vertical) (Switch V/H AF Area)

You can set whether to switch the [Focus Area] and the position of the focusing frame according to the orientation of the camera (horizontal/vertical). This function is useful when shooting scenes for which you have to change the camera position frequently, such as portraits or sports scenes.

1. **MENU → AF/MF (Focus) → [Focus Area] → [Switch V/H AF Area] → desired setting.**

Menu item details

Off:
Does not switch the [Focus Area] and the position of the focusing frame according to the orientation of the camera (horizontal/vertical).

AF Point Only:
Switches the position of the focusing frame according to the orientation of the camera (horizontal/vertical). The [Focus Area] is fixed.

AF Point + AF Area:
Switches both the [Focus Area] and the position of the focusing frame according to the orientation of the camera (horizontal/vertical).

An example when [AF Point + AF Area] is selected

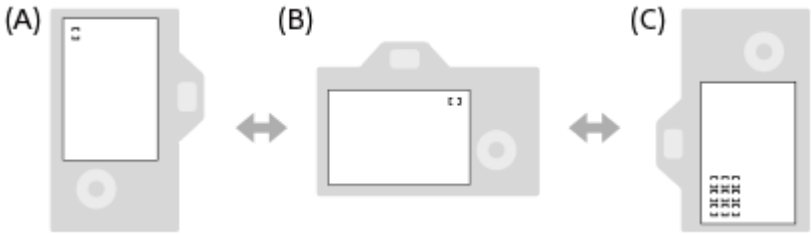

(A) Vertical: [Spot] (Upper left corner)
(B) Horizontal: [Spot] (Upper right corner)
(C) Vertical: [Zone] (Lower left corner)

- Three camera orientations are detected: horizontal, vertical with the side of the shutter button facing up, and vertical with the side of the shutter button facing down.

Note

- If the setting for [Switch V/H AF Area] is changed, the focus settings for each camera orientation will not be retained.
- The [Focus Area] and the position of the focusing frame will not change even when [Switch V/H AF Area] is set to [AF Point + AF Area] or [AF Point Only] in the following situations:
  - When the shooting mode is set to [Intelligent Auto]
  - During movie shooting
  - While using the digital zoom function
  - While the auto-focusing is activated*
  - During continuous shooting*

- During the countdown for the self-timer
- When [Focus Magnifier] is activated

* [Switch V/H AF Area] can be performed only when [Focus Mode] is set to AF-C.

- When you shoot images right after the power is turned on and the camera is vertical, the first shot is taken with the horizontal focus setting or with the last focus setting.
- The orientation of the camera cannot be detected when the lens is facing up or down.

Related Topic

- Selecting the focus area (Focus Area)

TP1002147348

5-069-971-11(6) Copyright 2026 Sony Corporation

Registering the current focus area (AF Area Registration)

You can move the focusing frame to a preassigned position temporarily using a custom key. This function is useful when shooting scenes in which the subject's movements are predictable; for example, sports scenes. With this function, you can switch the focus area quickly according to the situation.

How to register focus area

1. MENU → AF/MF (Focus) → [Focus Area] → [AF Area Registration] → [On].
2. Set the focus area to the desired position and then hold down the Fn (Function) button.

How to call up the registered focus area

1. MENU → (Setup) → [Operation Customize] → [Custom Key/Dial Set.] → desired key, then select [Regist. AF Area hold].
2. Set the camera to the shooting mode, hold down the key to which [Regist. AF Area hold] has been assigned and then press the shutter button to shoot images.

Hint

- When a focusing frame is registered using [AF Area Registration], the registered focusing frame flashes on the monitor.
- If you assign [Regist AF Area tggle] to a custom key, you can use the registered focusing frame without holding down the key.
- If [Reg. AF Area+AF On] is assigned to a custom key, auto focusing using the registered focusing frame is performed when the key is pressed.

Note

- A focus area cannot be registered in the following situations:
  - While [Touch Focus] is being performed
  - While using the digital zoom function
  - While [Touch Tracking] is being performed
  - While focusing
  - While performing focus lock
- You cannot assign [Regist. AF Area hold] to [Left Button], [Right Button], or [Down Button].
- You cannot call up the registered focus area in the following situations:
  - The Still/Movie/S&Q dial is set to either (Movie) or S&Q (S&Q Motion)
  - The mode dial is set to AUTO (Auto Mode)
- When [AF Area Registration] is set to [On], the [Lock Operation Parts] setting is locked to [Off].

Related Topic

- Selecting the focus area (Focus Area)
- Deleting a registered AF Area (Del. Regist. AF Area)
- Assigning frequently used functions to buttons and dials (Custom Key/Dial Set.)

TP1002147349

5-069-971-11(6) Copyright 2026 Sony Corporation

Deleting a registered AF Area (Del. Regist. AF Area)

Deletes the focusing frame position that was registered using [AF Area Registration].

1. **MENU → AF/MF (Focus) → [Focus Area] → [Del. Regist. AF Area].**

Related Topic

- Registering the current focus area (AF Area Registration)

TP1002147350

5-069-971-11(6) Copyright 2026 Sony Corporation

Focus Area Limit (still image/movie)

By limiting the types of available focus area settings in advance, you can more quickly select settings for [Focus Area].

1. **MENU → AF/MF (Focus) → [Focus Area] → [Focus Area Limit] → Add check marks to the focus areas that you want to use, and then select [OK].**

   The types of focus areas marked with ✓ (check mark) will be available as settings.

Hint

- When you assign [Switch Focus Area] to a desired key using [Custom Key/Dial Set.] or [Custom Key/Dial Set.], the focus area changes every time you press the assigned key. By limiting the types of selectable focus areas with [Focus Area Limit] in advance, you can more quickly select the focus area setting you want.

Note

- Types of focus areas that do not have a check mark cannot be selected using MENU or the Fn (function) menu. To select one, add a check mark using [Focus Area Limit].
- If you remove the check mark for a focus area registered with [Switch V/H AF Area] or [AF Area Registration], the registered settings will change.

Related Topic

- Selecting the focus area (Focus Area)
- Assigning frequently used functions to buttons and dials (Custom Key/Dial Set.)

TP1002149654

5-069-971-11(6) Copyright 2026 Sony Corporation

Circ. of Focus Point (still image/movie)

Sets whether to allow the focusing frame to jump from one end to the other when you move the focusing frame. This function is useful when you want to move the focusing frame from one end to the other quickly.
The function can be used when the following settings are selected for [Focus Area].

- [Zone]
- [Spot: XL]/[Spot: L]/[Spot: M]/[Spot: S]/[Spot: XS]
- [Expand Spot]
- [Custom 1] - [Custom 3]
- [Tracking: Zone]
- [Tracking: Spot XL]/[Tracking: Spot L]/[Tracking: Spot M]/[Tracking: Spot S]/[Tracking: Spot XS]
- [Tracking: Expand Spot]
- [Tracking: Custom 1] - [Tracking: Custom 3]

1. **MENU → AF/MF (Focus) → [Focus Area] → [Circ. of Focus Point] → desired setting.**

   When [Circulate] is selected:

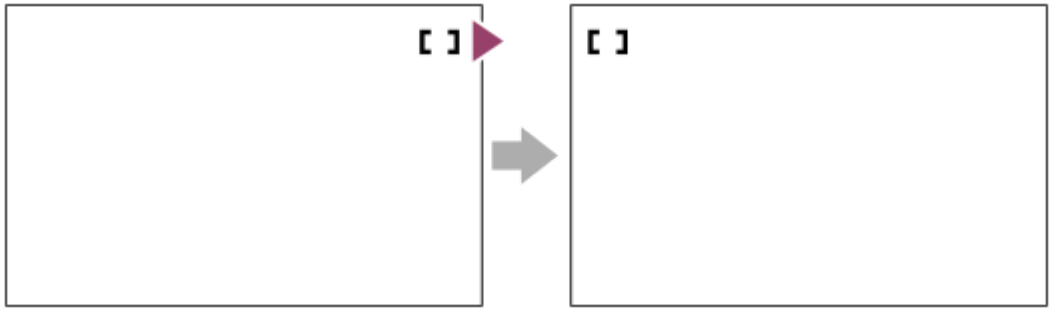

Menu item details

Does Not Circulate:
The cursor does not move when you try to move the focusing frame past the end.

Circulate:
The cursor jumps to the opposite end when you try to move the focusing frame past the end.

Note

- Even if you set [Circ. of Focus Point] to [Circulate], the focusing frame will not circulate diagonally.

Related Topic

- Selecting the focus area (Focus Area)

TP1002149636

5-069-971-11(6) Copyright 2026 Sony Corporation

AF Frame Move Amt (still image/movie)

S&Q

Sets the distance by which the focusing frame is moved when [Focus Area] is set to [Spot], etc. You can quickly move the focusing frame by increasing the distance, such as in situations where the subject is moving a lot.

1. **MENU → (Focus) → [Focus Area] → [AF Frame Move Amt] → desired setting.**

Menu item details

Standard:
The focusing frame moves by the standard distance.

Large:
The focusing frame moves over a greater distance at a time than with [Standard].

Hint

- When [Swt. AF Frame Move hold] is assigned to the desired key using [Custom Key/Dial Set.] or [Custom Key/Dial Set.], the [AF Frame Move Amt] setting temporarily switches while the key is pressed.
- If any of the following functions is assigned to the dials or control wheel using [Custom Key/Dial Set.] or [Custom Key/Dial Set.], you can move the focusing frame by the distance determined for each function, regardless of the setting for [AF Frame Move Amt].
  - [Move AF Frame ↔ : L]
  - [Move AF Frame ↕ : L]
  - [Move AF Frame ↔ : Std]
  - [Move AF Frame ↕ : Std]
- If any of the following functions is assigned to the dials or control wheel using [My Dial Settings], you can move the focusing frame by the distance determined for each function, regardless of the setting for [AF Frame Move Amt].
  - [Move AF Frame ↔ : L]
  - [Move AF Frame ↕ : L]
  - [Move AF Frame ↔ : Std]
  - [Move AF Frame ↕ : Std]

Related Topic

- Selecting the focus area (Focus Area)
- Assigning frequently used functions to buttons and dials (Custom Key/Dial Set.)

TP1002151156

5-069-971-11(6) Copyright 2026 Sony Corporation

Focus Area Color (still image/movie)

S&Q

You can specify the color of the frame indicating the focusing area. If the frame is difficult to see because of the subject, make it more visible by changing its color.

1. **MENU → AF/MF (Focus) → [Focus Area] → [Focus Area Color] → desired color.**

Menu item details

White:
Displays the frame indicating the focusing area in white.

Red:
Displays the frame indicating the focusing area in red.

Related Topic

- Selecting the focus area (Focus Area)

TP1002150245

5-069-971-11(6) Copyright 2026 Sony Corporation

AF Area Auto Clear

Sets whether the focus area is displayed all the time or disappears automatically shortly after focus is achieved.

1. **MENU → AF/MF (Focus) → [Focus Area] → [AF Area Auto Clear] → desired setting.**

Menu item details

On:
The focus area disappears automatically shortly after focus is achieved.

Off:
The focus area is displayed all the time.

Related Topic

- Selecting the focus area (Focus Area)

TP1002142839

5-069-971-11(6) Copyright 2026 Sony Corporation

Area Disp. dur Tracking

Sets whether or not to display the frame for the focusing area when [Focus Mode] is set to [Continuous AF] and [Focus Area] is set to [Tracking].

1. **MENU → AF/MF (Focus) → [Focus Area] → [Area Disp. dur Tracking] → desired setting.**

Menu item details

On:
Displays the frame for the focusing area during tracking. Since the tracking start area is displayed while tracking the subject, it is helpful when starting the next session of shooting.

Off:
Does not display the frame for the focusing area during tracking.

Related Topic

- Selecting the focus area (Focus Area)

TP1002152707

5-069-971-11(6) Copyright 2026 Sony Corporation

AF-C Area Display

You can set whether or not to display the area that is in focus when [Focus Mode] is set to [Continuous AF] and [Focus Area] is set to [Wide] or [Zone].

1. **MENU → (Focus) → [Focus Area] → [AF-C Area Display] → desired setting.**

Menu item details

On:
Displays the focus area that is in focus.

Off:
Does not display the focus area that is in focus.

Note

- When [Focus Area] is set to one of the following, the focusing frames in the area that is in focus turn green:
  - [Center Fix]
  - [Spot]
  - [Expand Spot]
  - [Custom] (when the size of the focus frame does not exceed the size of the [Spot: XL] focus frame)

Related Topic

- Selecting the focus area (Focus Area)

TP1002133998

5-069-971-11(6) Copyright 2026 Sony Corporation

Phase Detect. Area

Sets whether or not to display the Phase Detection AF area.

1. **MENU → AF/MF (Focus) → [Focus Area] → [Phase Detect. Area] → desired setting.**

Menu item details

On:
Displays the Phase Detection AF area.

Off:
Does not display the Phase Detection AF area.

Note

- Phase Detection AF is available only with compatible lenses. If an incompatible lens is attached, you will be unable to use Phase Detection AF. Phase Detection AF may not operate even with some compatible lens, such as lenses purchased in the past that have not been updated. For details on compatible lenses, visit the Sony web site in your area, or consult your Sony dealer or local authorized Sony service facility.
- When shooting images using a full-frame-size-compatible lens, the Phase Detection AF area will not be displayed even if [Phase Detect. Area] is set to [On].
- When recording movies, the Phase Detection AF area will not be displayed.

TP1002111306

5-069-971-11(6) Copyright 2026 Sony Corporation

Interchangeable Lens Digital Camera
ILCE-7M5 α7V

AF Lvl for Crossing

You can select the AF tracking sensitivity (ease of re-targeting) when another subject crosses between the camera and the subject or when the subject goes out of the focus area in the still image shooting mode.

1. **MENU → AF/MF (Focus) → [AF/MF] → [AF Lvl for Crossing] → desired setting.**

Menu item details

5(Responsive)/4/3(Standard)/2/1(Locked on):

Select [5(Responsive)] when you want to quickly focus on the crossing subject if another subject crosses between the camera and the subject, or when you want to quickly focus on another subject in the focus area if the subject goes out of the focus area.
Select [1(Locked on)] when you want to keep focusing on the subject if another subject crosses between the camera and the subject, or when you want to keep focusing on the distance where the subject previously was if the subject goes out of the focus area.

TP1002142853

5-069-971-11(6) Copyright 2026 Sony Corporation

AF Trk for Spd Chng

You can select the sensitivity of AF tracking relative to changes in the moving speed of the subject in the still image shooting mode.

1. **MENU → AF/MF (Focus) → [AF/MF] → [AF Trk for Spd Chng] → desired setting.**

Menu item details

Stable/Standard/Responsive:
Select [Stable] if you want to keep stable focus on a motionless subject or a subject that moves at a nearly constant speed.

Select [Responsive] if you want to keep the focus on a subject whose moving speed changes significantly, such as one that suddenly starts or stops moving.

- Normally, we recommend that you set it to [Standard]. If the autofocus is not stable with [Standard], try [Stable] or [Responsive].

Hint

- If the autofocus is not stable when shooting in dark environments, setting [AF Trk for Spd Chng] to [Stable] will make it easier to focus on a stationary subject or a subject that moves at an almost constant speed.

TP1002158507

5-069-971-11(6) Copyright 2026 Sony Corporation

AF Transition Speed

S&Q

Sets the focusing speed when the target of the auto focus is switched during movie shooting.

1. **MENU → AF/MF (Focus) → [AF/MF] → [AF Transition Speed] → desired setting.**

Menu item details

7 (Fast)/6/5/4/3/2/1 (Slow):
Select a faster value to focus on the subject more quickly.

Select a slower value to focus on the subject more smoothly.

Hint

- You can use the touch focus function to intentionally transition the AF.

TP1002142880

5-069-971-11(6) Copyright 2026 Sony Corporation

AF Subj. Shift Sensitivity

S&Q

Sets the sensitivity with which the focus switches to another subject when the original subject leaves the focus area or an unfocused subject in the foreground approaches the center of the focus area during movie shooting.

1. **MENU → AF/MF (Focus) → [AF/MF] → [AF Subj. Shift Sensitivity] → desired setting.**

Menu item details

5(Responsive)/4/3/2/1(Locked on):
Select a higher value when you want to shoot a quick-moving subject, or when you want to shoot multiple subjects while switching the focus continually.
Select a lower value when you want the focus to remain steady, or when you want to keep the focus on a particular target without being affected by other subjects.

TP1002142829

5-069-971-11(6) Copyright 2026 Sony Corporation

AF Assist

While shooting a movie with auto focus, you can change the subject in focus by operating the focus ring of the lens.

1. **MENU → AF/MF (Focus) → [AF/MF] → [AF Assist] → [On].**

2. **While shooting a movie with auto focus, turn the focus ring of the lens to focus on the intended subject.**

   When you stop operating the focus ring, the subject that is in focus with the focus ring becomes the autofocus target.

Menu item details

On:
Uses the AF assist function.

Off:
Does not use the AF assist function.

Hint

- It will be easier to see which region is in focus if you use the [Peaking Display] or [Focus Map] function along with [AF Assist], making it easier for you to focus on the intended subject.

Note

- Only subjects within the focus area are targeted by auto focus.
- The following lenses are not compatible with [AF Assist].
  - SELP1650 (sold separately)
  - SELP16502 (sold separately)
  - SEL18200LE (sold separately)

Related Topic

- Peaking Display
- Focus Map

TP1002153940

5-069-971-11(6) Copyright 2026 Sony Corporation

AF/MF Selector

You can easily switch the focusing mode from auto to manual and vice versa while shooting without changing your holding position.

1. **MENU → (Setup) → [Operation Customize] → [Custom Key/Dial Set.] or [Custom Key/Dial Set.] → desired button → [AF/MF Selector Hold] or [AF/MF Selector Toggle].**

Menu item details

AF/MF Selector Hold:
Switches the focusing mode while the button is held down.

AF/MF Selector Toggle:
Switches the focusing mode until the button is pressed again.

Note

- You cannot set the [AF/MF Selector Hold] function to [Left Button], [Right Button] or [Down Button] of the control wheel.
- If the lens is equipped with an AF/MF selector switch, the state of the switch on the lens will take priority.

Related Topic

- Assigning frequently used functions to buttons and dials (Custom Key/Dial Set.)

TP1002110529

5-069-971-11(6) Copyright 2026 Sony Corporation

Full Time DMF

S&Q

Even if your camera or lens is set to autofocus, you can always switch to the manual focus mode simply by turning the focus ring. This is convenient when you want to switch between auto focus and manual focus at any time.

1. **MENU → AF/MF (Focus) → [AF/MF] → [Full Time DMF] → desired setting.**

Menu item details

On:
Focus ring operations during autofocus are enabled.

Off:
Focus ring operations during autofocus are disabled.

Note

- The following functions cannot be used when [Full Time DMF] is set to [On], and [Focus Mode] is set to [Continuous AF].
  - Auto Magnifier in MF
- [Full Time DMF] cannot be used in the following cases.
  - When performing continuous shooting while [Focus Mode] is set to [Continuous AF] or [Automatic AF]
  - When an SEL70200GM lens (sold separately) is attached while [Focus Mode] is set to [Continuous AF]
- The following lenses (sold separately) do not support [Full Time DMF].
  - SELP1650
  - SELP16502
  - SEL18200LE
  - A-mount lens

Related Topic

- Direct manual focus (DMF)
- Auto Magnifier in MF
- Peaking Display

TP1002154673

5-069-971-11(6) Copyright 2026 Sony Corporation

Interchangeable Lens Digital Camera
ILCE-7M5 α7V

AF w/ Shutter

Selects whether to focus automatically when you press the shutter button halfway down. Select [Off] to adjust the focus and the exposure separately.

1. **MENU → AF/MF (Focus) → [AF/MF] → [AF w/ Shutter] → desired setting.**

Menu item details

On:
The auto focus operates when you press the shutter button halfway down.

Off:
The auto focus does not operate even if you press the shutter button halfway down.

Related Topic

- AF On

TP1002110535

5-069-971-11(6) Copyright 2026 Sony Corporation

AF On

You can focus without pressing the shutter button halfway down. The settings for [Focus Mode] will be applied.

1. **Press the AF-ON (AF On) button while shooting.**
   - When shooting a movie, you can perform auto-focusing while holding down the AF-ON button even in the manual focusing mode.

Hint

- Set [AF w/ Shutter] to [Off] when you do not want to perform auto focusing using the shutter button or when focusing at a specific shooting distance predicting the position of the subject.

Related Topic

- AF w/ Shutter

TP1002110536

5-069-971-11(6) Copyright 2026 Sony Corporation

Focus Hold

S&Q

Locks the focus while the key to which the Focus Hold function has been assigned is pressed.

1. **MENU → (Setup) → [Operation Customize] → [Custom Key/Dial Set.] or [Custom Key/Dial Set.] → assign the [Focus Hold] function to the desired key.**
2. **Focus and press the key to which the [Focus Hold] function has been assigned.**

Related Topic

- Assigning frequently used functions to buttons and dials (Custom Key/Dial Set.)

TP1002142383

5-069-971-11(6) Copyright 2026 Sony Corporation

Priority Set in AF-S

Sets whether to release the shutter even if the subject is not in focus when [Focus Mode] is set to [Single-shot AF], [DMF] or [Automatic AF] and the subject is remaining still.

1. **MENU → AF/MF (Focus) → [AF/MF] → [Priority Set in AF-S] → desired setting.**

Menu item details

AF:
Prioritizes focusing. The shutter will not be released until the subject is in focus.

Release:
Prioritizes the shutter's release. The shutter will be released even if the subject is out of focus.

Balanced Emphasis:
Shoots with a balanced emphasis on both focusing and shutter release.

Related Topic

- Selecting the focus method (Focus Mode)
- Priority Set in AF-C

TP1002134001

5-069-971-11(6) Copyright 2026 Sony Corporation

Priority Set in AF-C

Sets whether to release the shutter even if the subject is not in focus when the continuous AF is activated and the subject is in motion.

1. **MENU → AF/MF (Focus) → [AF/MF] → [Priority Set in AF-C] → desired setting.**

Menu item details

AF:
Prioritizes focusing.

Release:
Prioritizes the shutter's release. The shutter will be released even if the subject is out of focus.

Balanced Emphasis:
Shoots with a balanced emphasis on both focusing and shutter release.

Related Topic

- Selecting the focus method (Focus Mode)
- Priority Set in AF-S

TP1002134002

5-069-971-11(6) Copyright 2026 Sony Corporation

AF Illuminator

The AF illuminator supplies fill light to focus more easily on a subject in dark surroundings. In the time between pressing the shutter button halfway down and locking the focus, the AF illuminator lights up to allow the camera to focus easily.
If a flash with an AF illuminator function is attached to the Multi Interface Shoe, when the flash is turned on, the AF illuminator of the flash will turn on as well.

1. **MENU → AF/MF (Focus) → [AF/MF] → [AF Illuminator] → desired setting.**

Menu item details

Auto:
The AF illuminator lights up automatically in dark surroundings.

Off:
Does not use the AF illuminator.

Note

- You cannot use [AF Illuminator] in the following situations:
  - When the shooting mode is [Movie] or [S&Q Motion].
  - When [Focus Mode] is set to [Continuous AF] or [Automatic AF] and the subject is moving (when the focus indicator / lights up).
  - When [Focus Magnifier] is activated.
  - When a Mount Adaptor is attached.
- The AF illuminator emits a very bright light. Although there is no health hazard, do not look directly into the AF illuminator at close range.

TP1002133997

5-069-971-11(6) Copyright 2026 Sony Corporation

Aperture Drive in AF

Changes the aperture drive system to prioritize the auto-focusing tracking performance or to prioritize silence.

1. **MENU → AF/MF (Focus) → [AF/MF] → [Aperture Drive in AF] → desired setting.**

Menu item details

Focus Priority:
Changes the aperture drive system to prioritize auto-focusing performance.

Standard:
Uses the standard aperture drive system.

Silent Priority:
Changes the aperture drive system to prioritize silence so that the sound from the aperture drive is quieter than in [Standard].

Note

- When [Focus Priority] is selected, sound from the aperture drive may be audible, or the aperture effect may not be visible on the monitor. To avoid these phenomena, change the setting to [Standard].
- When [Silent Priority] is selected, the focusing speed may become slower, and it may be more difficult to focus on a subject.
- The focus during continuous shooting is locked to the setting in the first shot in the following situations.
  - When [Shutter Type] is set to [Mechanical Shutter], and the F-value is greater than F22.
  - When [Shutter Type] is set to [Electronic Shutter], [Aperture Drive in AF] is set to [Standard] or [Silent Priority], and the F-value is greater than F22.
  - When [Shutter Type] is set to [Electronic Shutter], [Aperture Drive in AF] is set to [Focus Priority], the F-value is greater than F22, and the continuous shooting speed is [30 images/s].
- The effect may differ depending on the lens you use and the shooting conditions.

Related Topic

- Silent Mode Settings (still image/movie)

TP1002149642

5-069-971-11(6) Copyright 2026 Sony Corporation

Preset Focus/Zoom

You can move the focus position (the distance to the subject in focus) and zoom position (angle of view) to preregistered positions using custom keys. You can register 5 focus position/zoom position combinations.

To register the focus position/zoom position

1. MENU → (Setup) → [Operation Customize] → [Custom Key/Dial Set.] or [Custom Key/Dial Set.] → Assign [Preset Focus/Zoom 1] - [Preset Focus/Zoom 5] to the desired key.
   - To use the [Preset Focus/Zoom] function, you need to assign the [Preset Focus/Zoom] function to a custom key.
2. On the shooting screen, press and hold the key to which you have assigned [Preset Focus/Zoom].
   The focus position and zoom position at the time that the key was pressed and held will be registered to the assigned number.
   - If you register information again to a number to which content has already been registered, the content will be overwritten.

To recall the focus position/zoom position

Press the key to which you have assigned [Preset Focus/Zoom] on the shooting screen to recall the registered focus position and zoom position.

To check the registered settings

You can check the registered focus position and zoom position by selecting MENU → AF/MF (Focus) → [AF/MF] → [Preset Focus/Zoom] → desired number.

- If you add a check mark to [Recalls only zoom position.] on the [Preset Focus/Zoom] screen, only the zoom position and not the focus position will be recalled when you recall the number.

Hint

- You can also assign [Preset Focus] to [Function Ring(Lens)]. In this case, move and hold the function ring of the lens on the shooting screen to register the focus position and zoom position, and briefly flick it to recall them.
- Only the settings for the focus position and zoom position to be registered to the function ring on the lens are registered to [Preset Focus/Zoom 6] under [Preset Focus/Zoom].

Note

- You can register zoom positions only within the range of the optical zoom.
- The focus position and zoom position cannot be recalled while the shutter button is pressed half way down.
- To use the [Preset Focus/Zoom] function in the movie mode, set [AF Assist] to [On].
- If a prime lens is attached, only the focus position will be registered.
- If a zoom lens without power zoom is attached, only the focus position can be registered and recalled.

- The focus position and zoom position cannot be recalled if the attached lens is different from the lens that was attached when you registered them.
- Even if the model name is the same, if you attach a different individual lens, register the focus position/zoom position again.
- The [Preset Focus/Zoom] function may not be supported with some zoom lenses that are not equipped with power zoom. For details, refer to the following website.
  https://support.d-imaging.sony.co.jp/www/cscs/lens_body/
- When an A-Mount Lens is attached, you cannot register or recall the focus position or zoom position.

Related Topic

- Assigning frequently used functions to buttons and dials (Custom Key/Dial Set.)
- Function Ring(Lens)

TP1002158452

5-069-971-11(6) Copyright 2026 Sony Corporation

AF in Focus Mag.

S&Q

You can focus on the subject more accurately using auto-focus by magnifying the area where you want to focus. While the magnified image is displayed, you can focus on a smaller area than [Spot] under [Focus Area].

1. **MENU → AF/MF (Focus) → [Focus Assistant] → [AF in Focus Mag.] → [On].**

2. **MENU → AF/MF (Focus) → [Focus Assistant] → [Focus Magnifier].**

3. **Magnify the image by pressing the center of the multi-selector, and then adjust the position by pressing the multi-selector up/down/left/right.**
   - The magnification scale changes each time you press the center.

4. **Press the shutter button halfway down to focus.**
   - The focus will be achieved at point of + (plus mark) in the center of the screen.

5. **Press the shutter button all the way down to shoot.**
   - The camera exits the magnified display after shooting.

Hint

- Use of a tripod is recommended to accurately identify the location you want to magnify.
- You can check the auto-focusing result by magnifying the displayed image. If you want to readjust the focus position, adjust the focus area on the magnified screen and then press the shutter button halfway down.

Note

- If you enlarge an area at the edge of the screen, the camera may not be able to focus.
- The exposure and white balance cannot be adjusted while the displayed image is being magnified.
- [AF in Focus Mag.] is unavailable in the following situations:
  - During movie shooting
  - When [Focus Mode] is set to [Continuous AF].
  - When [Focus Mode] is set to [Automatic AF] and the shooting mode is set to other than P/A/S/M.
  - When [Focus Mode] is set to [Automatic AF] and [Drive Mode] is set to [Cont. Shooting].
  - When using a Mount Adaptor (sold separately).
- While the displayed image is being magnified, the following functions are unavailable:
  - [Subject Recognition AF]
  - [Subject Recog in AF]

Related Topic

- Focus Magnifier

TP1002142870

5-069-971-11(6) Copyright 2026 Sony Corporation

Auto Magnifier in MF

S&Q

Enlarges the image on the screen automatically to make manual focusing easier. This works in Manual Focus or Direct Manual Focus shooting.

1. **MENU → AF/MF (Focus) → [Focus Assistant] → [Auto Magnifier in MF] → [On].**

2. **Turn the focus ring to adjust the focus.**
   - The image is enlarged. You can magnify images further by pressing the center of the control wheel.

Hint

- You can set how long the image is to be shown magnified by selecting MENU → AF/MF (Focus) → [Focus Assistant] → [Focus Magnif. Time].

Note

- You cannot use [Auto Magnifier in MF] when shooting movies. Use the [Focus Magnifier] function instead.
- [Auto Magnifier in MF] is not available when a Mount Adaptor is attached. Use the [Focus Magnifier] function instead.

Related Topic

- Manual Focus
- Direct manual focus (DMF)
- Focus Magnif. Time (still image/movie)

TP1002133995

5-069-971-11(6) Copyright 2026 Sony Corporation

Focus Magnifier

S&Q

You can check the focus by enlarging the image before shooting.
Unlike with [Auto Magnifier in MF], you can magnify the image without operating the focus ring.

1. **MENU → AF/MF (Focus) → [Focus Assistant] → [Focus Magnifier].**

2. **Press the center of the multi-selector to enlarge the image and select the area you want to enlarge by pressing the multi-selector up/down/left/right.**
   - Each time you press the center, the magnification scale will change.
   - You can set the initial magnification by selecting MENU → AF/MF (Focus) → [Focus Assistant] → [Initial Focus Mag.] or [Initial Focus Mag.].

3. **Confirm the focus.**
   - Press the (Delete) button to bring the magnified position into the center of an image.
   - When the focus mode is [Manual Focus], you can adjust the focus while an image is magnified. If [AF in Focus Mag.] is set to [Off], the [Focus Magnifier] function is canceled when the shutter button is pressed halfway down.
   - When the shutter button is pressed halfway down while an image is magnified during the auto-focusing, different functions are performed depending on the [AF in Focus Mag.] setting.
     - When [AF in Focus Mag.] is set to [On]: Auto-focusing is performed again.
     - When [AF in Focus Mag.] is set to [Off]: The [Focus Magnifier] function is canceled.
   - You can set how long the image is to be shown magnified by selecting MENU → AF/MF (Focus) → [Focus Assistant] → [Focus Magnif. Time].

To use the focus magnifier function by touch operation (only during still image shooting)

When [Touch Func. in Shooting] is set to [Touch Focus], you can magnify the image and adjust the focus by touching the monitor. Set in advance as follows.

- [Touch Operation]: [On]
- [Shooting Screen] under [Touch Panel Settings]:
  - Set [Shooting Screen] to [On].
  - Set [Touch Func. in Shooting] to [Touch Focus].
- [Touch Panel/Pad]: Set properly for your use.

When the focus mode is [Manual Focus], you can perform [Focus Magnifier] by double-tapping the area to focus on while shooting with the monitor.
While shooting with the viewfinder, a frame is displayed in the center of the monitor by double-tapping and you can move the frame by dragging it. The image is magnified by pressing the center of the multi-selector.

Hint

- While using the focus magnifier function, you can move the magnified area by dragging it on the touch panel.
- To exit the focus magnifier function, double-tap the monitor again. When [AF in Focus Mag.] is set to [Off], the focus magnifier function is ended by pressing the shutter button halfway down.
- You can set whether to exit or continue the magnified display after shooting by pressing the Fn (Function) button while the magnified image is displayed. This function is available when shooting with the following settings:
  - Focus mode: [Single-shot AF], [DMF] or [Manual Focus]
  - Drive mode: [Single Shooting] or [Cont. Shooting]
  - [AF in Focus Mag.]: [On]
  - [Auto Review]: [Off]

Related Topic

- Auto Magnifier in MF
- Focus Magnif. Time (still image/movie)
- Initial Focus Mag. (still image)
- Initial Focus Mag. (movie)
- AF in Focus Mag.
- Touch Operation
- Touch Panel Settings

TP1002110533

5-069-971-11(6) Copyright 2026 Sony Corporation

Focus Magnif. Time (still image/movie)

Set the duration for which an image is to be magnified using the [Auto Magnifier in MF] or [Focus Magnifier] function.

1. **MENU → AF/MF (Focus) → [Focus Assistant] → [Focus Magnif. Time] → desired setting.**

Menu item details

2 Sec:
Magnifies the images for 2 seconds.

5 Sec:
Magnifies the images for 5 seconds.

No Limit:
Magnifies the images until you press the shutter button.

Related Topic

- Auto Magnifier in MF
- Focus Magnifier

TP1002110524

5-069-971-11(6) Copyright 2026 Sony Corporation

Initial Focus Mag. (still image)

S&Q

Sets the initial magnification scale when using [Focus Magnifier]. Select a setting that will help you frame your shot.

1. **MENU → AF/MF (Focus) → [Focus Assistant] → [Initial Focus Mag.] → desired setting.**

Menu item details

Full-frame shooting

x1.0:
Displays the image with the same magnification as the shooting screen.
x5.5:
Displays a 5.5-times enlarged image.

APS-C/Super 35mm size shooting

x1.0:
Displays the image with the same magnification as the shooting screen.
x3.6:
Displays a 3.6-times enlarged image.

Related Topic

- Focus Magnifier

TP1002142803

5-069-971-11(6) Copyright 2026 Sony Corporation

Initial Focus Mag. (movie)

S&Q

Sets the initial magnification scale for [Focus Magnifier] in the movie shooting mode.

1. **MENU → AF/MF (Focus) → [Focus Assistant] →[Initial Focus Mag.] → desired setting.**

Menu item details

x1.0:
Displays the image with the same magnification as the shooting screen.

x4.0:
Displays a 4.0-times enlarged image.

Related Topic

- Focus Magnifier

TP1002149645

5-069-971-11(6) Copyright 2026 Sony Corporation

Focus Map

When shooting a movie, areas that are in focus and areas that are out of focus are displayed so that you can visually distinguish them. Areas behind the in-focus region are indicated by dots in a cool color **(A)** and those in front of the in-focus region are indicated by dots in a warm color **(B)**. Dots are not displayed in the in-focus range. Dots are not recorded in the actual movie.

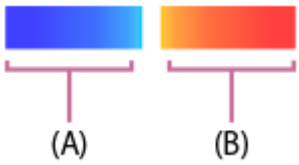

1. **MENU → AF/MF (Focus) → [Focus Assistant] → [Focus Map] → desired setting.**

Menu item details

On:
Displays the focus map.

Off:
Does not display the focus map.

Hint

- The focus map can also be output to an external monitor. To output the focus map to an external monitor, set [HDMI Info. Display] to [On].

Note

- [Focus Map] is unavailable in the following situations:
  - When [Focus Magnifier] is activated
  - While using the digital zoom function
  - While streaming
  - When using a lens that does not support phase detection AF
  - When a Mount Adaptor is attached
  - When the lens is not attached to the camera

Related Topic

- HDMI Info. Display

TP1002153941

5-069-971-11(6) Copyright 2026 Sony Corporation

Peaking Display

S&Q

Sets the peaking function, which enhances the outline of in-focus areas during shooting with Manual Focus or Direct Manual Focus. When shooting a movie, you can also use the peaking function with auto focus.

1. **MENU → AF/MF (Focus) → [Peaking Display] → Select a menu item and set the desired parameter.**

Menu item details

Peaking Display:
Sets whether to display peaking. ([On] / [Off])

Peaking Level:
Sets the level of enhancement of in-focus areas. ([High] / [Mid] / [Low])

Peaking Color:
Sets the color used to enhance in-focus areas. ([Red] / [Yellow] / [Blue] / [White])

Note

- Since the product recognizes sharp areas as in focus, the effect of peaking differs, depending on the subject and lens.
- The outline of in-focus ranges is not enhanced on devices connected via HDMI.

Related Topic

- Manual Focus
- Direct manual focus (DMF)

TP1002148542

5-069-971-11(6) Copyright 2026 Sony Corporation

Exposure Comp. (still image/movie)

Normally, exposure is set automatically (auto exposure). Based on the exposure value set by auto exposure, you can make the entire image brighter or darker if you adjust [Exposure Comp.] to the plus side or minus side, respectively (exposure compensation).

1. **MENU → (Exposure/Color) → [Exposure Comp.] → [Exposure Comp.] → desired setting.**

   + (over) side:
   Images become brighter.
   - (under) side:
   Images become darker.

   - When [Touch Operation] is set to [On] and [Footer Icon Touch] is set to [On], you can change the exposure compensation values using touch operations.
   - [Exposure Comp.] is assigned to the rear dial R in the default settings. You can also set the exposure compensation by unlocking and turning the rear dial R. Pressing the lock button in the center switches the rear dial R between the locked and unlocked status. The dial is unlocked when the lock button is popped up and the white line is visible.
   - You can adjust the exposure compensation value within the range of -5.0 EV to +5.0 EV.
   - You can confirm the exposure compensation value that you set on the shooting screen.
     Monitor

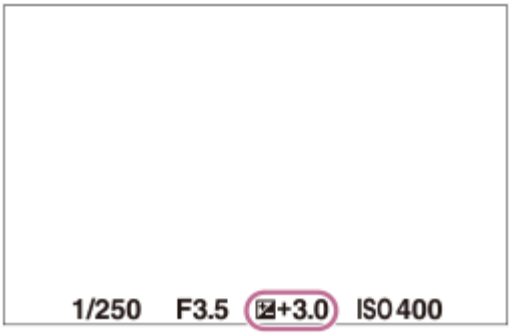

Viewfinder

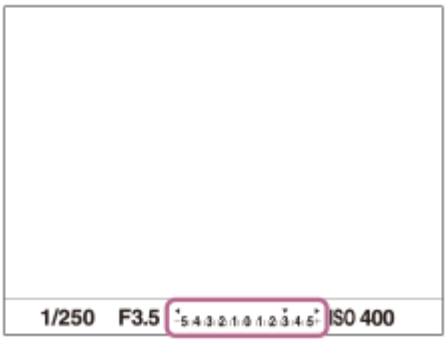

Hint

- Only a value between -3.0 EV and +3.0 EV with the equivalent image brightness appears on the screen when shooting. If you set an exposure compensation value outside this range, the image brightness on the screen will not be affected, but the value will be reflected in the recorded image.
- You can adjust the exposure compensation value within the range of -2.0 EV to +2.0 EV for movies.

Note

- You cannot perform the exposure compensation in the following shooting modes:
  - [Intelligent Auto]
- When using [Manual Exposure], you can perform the exposure compensation only when [ISO] is set to [ISO AUTO].
- If you shoot a subject in extremely bright or dark conditions, or when you use the flash, you may not be able to get a satisfactory effect.

Related Topic

- Exposure step (still image/movie)
- Exp.comp.set
- Cont. Bracket
- Single Bracket
- Zebra Display

TP1002134003

5-069-971-11(6) Copyright 2026 Sony Corporation

Histogram display

A histogram shows the luminance distribution, displaying how many pixels there are by luminance.
To display the histogram on the shooting screen or playback screen, press the DISP (Display Setting) button repeatedly.

How to read the histogram

The histogram indicates darker values toward the left and brighter values toward the right.
The histogram changes depending on the exposure compensation.
A peak at the right or left end of the histogram indicates that the image has an overexposed or underexposed area, respectively. You cannot correct such defects using a computer after shooting. Perform exposure compensation before shooting as necessary.

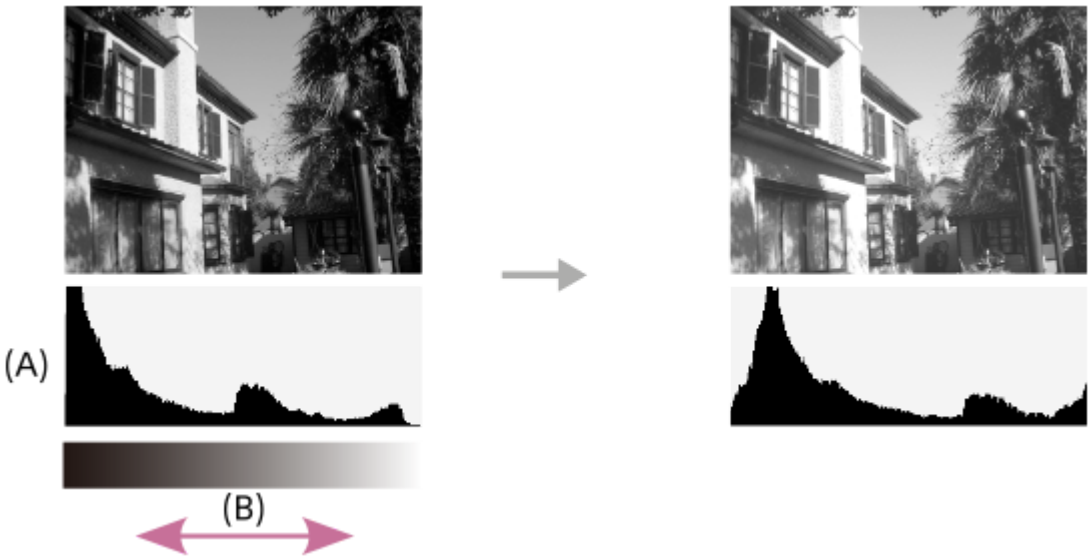

(A): Pixel count
(B): Brightness

Note

- The information in the histogram display does not indicate the final photograph. It is information about image displayed on the screen. The final result depends on the aperture value, etc.
- The histogram display is extremely different between shooting and playback in the following cases:
  - When the flash is used
  - When shooting a low luminance subject such as a night scene

Related Topic

- DISP (Display Setting) button
- Exposure Comp. (still image/movie)

TP1002151157

5-069-971-11(6) Copyright 2026 Sony Corporation

Exposure step (still image/movie)

S&Q

You can adjust the setting increment for the shutter speed, aperture, and exposure compensation values.

1. **MENU → (Exposure/Color) → [Exposure Comp.] → [Exposure step] → desired setting.**

Menu item details

0.5EV / 0.3EV

Related Topic

- Exposure Comp. (still image/movie)

TP1002110545

5-069-971-11(6) Copyright 2026 Sony Corporation

Exposure Std. Adjust (still image/movie)

S&Q

Adjusts this camera's standard for the correct exposure value for each metering mode.

1. **MENU → (Exposure/Color) → [Exposure Comp.] → [Exposure Std. Adjust] → desired metering mode.**

2. **Select the desired value as the metering standard.**
   - You can set a value from -1 EV to +1 EV in 1/6 EV increments.

Metering Mode

The set standard value will be applied when you select the corresponding metering mode in MENU → (Exposure/Color) → [Metering] → [Metering Mode].
Multi/ Center/ Spot/ Entire Screen Average/ Highlight

Note

- The exposure compensation will not be affected when [Exposure Std. Adjust] is changed.
- The exposure value will be locked according to the value set for [Spot] during using spot AEL.
- The standard value for M.M (Metered Manual) will be changed according to the value set in [Exposure Std. Adjust].
- The value set in [Exposure Std. Adjust] is recorded in Exif data separately from the exposure compensation value. The amount of exposure standard value will not be added to the exposure compensation value.
- If you set [Exposure Std. Adjust] during bracketing shooting, the number of shots for the bracketing will be reset.

Related Topic

- Metering Mode (still image/movie)

TP1002142823

5-069-971-11(6) Copyright 2026 Sony Corporation

D-Range Optimizer (still image/movie)

By dividing the image into small areas, the product analyzes the contrast of light and shadow between the subject and the background, and creates an image with the optimal brightness and gradation.

1. **MENU → (Exposure/Color) → [Color/Tone] → [D-Range Optimizer] → desired setting.**

Menu item details

Off:
Does not adjust brightness and gradation.

D-Range Optimizer:
If you select [D-Range Optimizer: Auto], the camera will automatically adjust the brightness and gradation. To optimize the gradation of a recorded image by individual areas, select an optimization level from [D-Range Optimizer: Lv1] (weak) to [D-Range Optimizer: Lv5] (strong).

Note

- In the following situations, [D-Range Optimizer] is fixed to [Off]:
  - When [Picture Profile] is set to other than [Off]
  - When [Log Shooting] is set to [On (Flexible ISO)].
- When shooting with [D-Range Optimizer], the image may be noisy. Select the proper level by checking the recorded image, especially when you enhance the effect.

TP1002134017

5-069-971-11(6) Copyright 2026 Sony Corporation

Metering Mode (still image/movie)

S&Q

Selects the metering mode that sets which part of the screen to measure for determining the exposure.

1. **MENU → (Exposure/Color) → [Metering] → [Metering Mode] → desired setting.**

Menu item details

Multi:
Measures light on each area after dividing the total area into multiple areas and determines the proper exposure of the entire screen (Multi-pattern metering).

Center:
Measures the average brightness of the entire screen, while emphasizing the central area of the screen (Center-weighted metering).

Spot:
Measures only inside the metering circle. This mode is suitable for measuring light on a specified part of the entire screen. The size of the metering circle can be selected from [Spot: Standard] and [Spot: Large]. The position of the metering circle depends on the setting for [Spot Metering Point].

Entire Screen Avg.:
Measures the average brightness of the entire screen. The exposure will be stable even if the composition or the position of the subject changes.

Highlight:
Measures the brightness while emphasizing the highlighted area on the screen. This mode is suitable for shooting the subject while avoiding overexposure.

Hint

- The spot metering point can be coordinated with the focus area by using [Focus Point Link].
- When [Multi] is selected and [Face Priority in Multi Metering] is set to [On], the camera measures brightness based on detected faces.
- When [Metering Mode] is set to [Highlight] and the [D-Range Optimizer] function is activated, the brightness and the contrast will be corrected automatically by dividing the image into small areas and analyzing the contrast of light and shadow. Make settings based on the shooting circumstances.

Note

- [Metering Mode] is locked to [Multi] in the following shooting situations:
  - [Intelligent Auto]
  - When using a zoom function other than the optical zoom
- In [Highlight] mode, the subject may be dark if a brighter part exists on the screen.

Related Topic

- AE lock
- Spot Metering Point (still image/movie)

- Face Priority in Multi Metering (still image/movie)
- D-Range Optimizer (still image/movie)

TP1002110539

5-069-971-11(6) Copyright 2026 Sony Corporation

Face Priority in Multi Metering (still image/movie)

Sets whether the camera measures brightness based on detected faces when [Metering Mode] is set to [Multi].

1. **MENU → (Exposure/Color) → [Metering] → [Face Priority in Multi Metering] → desired setting.**

Menu item details

On:
The camera measures brightness based on detected faces.

Off:
The camera measures brightness using the [Multi] setting, without detecting faces.

Note

- When the shooting mode is set to [Intelligent Auto], [Face Priority in Multi Metering] is locked to [On].
- When [Subject Recog in AF] under [Subject Recognition] is set to [On] and [Recognition Target] is set to an item other than [Human], [Face Priority in Multi Metering] does not work.

Related Topic

- Metering Mode (still image/movie)

TP1002148517

5-069-971-11(6) Copyright 2026 Sony Corporation

Spot Metering Point (still image/movie)

S&Q

Sets whether to coordinate the spot metering position with the focus area when [Focus Area] is set to the following parameters:

- [Spot: XL]/[Spot: L]/[Spot: M]/[Spot: S]/[Spot: XS]
- [Expand Spot]
- [Custom 1] – [Custom 3]
- [Tracking: Spot XL]/[Tracking: Spot L]/[Tracking: Spot M]/[Tracking: Spot S]/[Tracking: Spot XS]
- [Tracking: Expand Spot]
- [Tracking: Custom 1] – [Tracking: Custom 3]

1. **MENU → (Exposure/Color) → [Metering] → [Spot Metering Point] → desired setting.**

Menu item details

Center:
The spot metering position does not coordinate with the focus area, but always meters brightness at the center.

Focus Point Link:
The spot metering position coordinates with the focus area.

Note

- Even if the spot metering position is coordinated with the [Tracking] start position, it will not be coordinated with the tracking of the subject.
- When [Focus Area] is set to the following parameters, the spot metering position is locked to the center.
  - [Wide]
  - [Zone]
  - [Center Fix]
  - [Tracking: Wide]/[Tracking: Zone]/[Tracking: Center Fix]

Related Topic

- Selecting the focus area (Focus Area)
- Metering Mode (still image/movie)

TP1002142849

5-069-971-11(6) Copyright 2026 Sony Corporation

AE lock

When the contrast between the subject and background is high, such as when shooting a backlit subject or a subject near a window, meter the light at a spot where the subject appears to have the appropriate brightness and lock the exposure before shooting. To reduce the brightness of the subject, meter the light at a spot brighter than the subject and lock the exposure of the entire screen. To make the subject brighter, meter the light at a spot darker than the subject and lock the exposure of the entire screen.

1. **Adjust the focus on the spot at which the exposure is adjusted.**

2. **Press the AEL button.**

   The exposure is locked, and ✱ (AE lock) is displayed.

3. **Keep pressing the AEL button and focus on the subject again, then shoot the picture.**

   - Keep holding the AEL button down while taking a shot if you want to continue shooting with the fixed exposure. Release the button to reset the exposure.

Hint

- If you assign the [AEL toggle] function to the AEL button using [Custom Key/Dial Set.] or [Custom Key/Dial Set.], you can lock the exposure without holding down the button.

Note

- [AEL hold] and [AEL toggle] are not available when using zoom functions other than optical zoom.

Related Topic

- AEL button
- Assigning frequently used functions to buttons and dials (Custom Key/Dial Set.)

TP1002110540

5-069-971-11(6) Copyright 2026 Sony Corporation

AEL w/ Shutter

Sets whether to fix the exposure when you press the shutter button halfway down.
Select [Off] to adjust the focus and the exposure separately.

1. **MENU → (Exposure/Color) → [Metering] → [AEL w/ Shutter] → desired setting.**

Menu item details

Auto:
Fixes the exposure after adjusting the focus automatically when you press the shutter button halfway down when [Focus Mode] is set to [Single-shot AF]. When [Focus Mode] is set to [Automatic AF], and the product determines that the subject is moving, or you shoot burst images, the fixed exposure is canceled.

On:
Fixes the exposure when you press the shutter button halfway down.

Off:
Does not fix the exposure when you press the shutter button halfway down. Use this mode when you want to adjust focus and exposure separately.
The product keeps adjusting the exposure while shooting in [Cont. Shooting] mode.

Note

- Operation using the AEL button is prioritized over the [AEL w/ Shutter] settings.

TP1002110541

5-069-971-11(6) Copyright 2026 Sony Corporation

Auto Slow Shutter

S&Q

Sets whether or not to adjust the shutter speed automatically when recording movies if the subject is dark. This function cannot be used during slow-motion/quick-motion recording.

1. **MENU → (Exposure/Color) → [Exposure] → [Auto Slow Shutter] → desired setting.**

Menu item details

On:
Uses Auto Slow Shutter. The shutter speed automatically slows when recording in dark locations. You can reduce noise in the movie by using a slow shutter speed when recording in dark locations.

Off:
Does not use Auto Slow Shutter. The recorded movie will be darker than when [On] is selected, but you can record movies with smoother motion and less object blur.

Note

- [Auto Slow Shutter] does not function in the following situations:
  - S (Shutter Priority)
  - M (Manual Exposure)
  - When [ISO] is set to other than [ISO AUTO]
  - When [Exposure Ctrl Type] is set to [Flexible Exp. Mode] and the method for adjusting the shutter speed is set to [Manual]

TP1002110597

5-069-971-11(6) Copyright 2026 Sony Corporation

Zebra Display

Sets a zebra pattern, which appears over part of an image if the brightness level of that part meets the IRE level that you have set. Use this zebra pattern as a guide to adjust the brightness.

1. **MENU → (Exposure/Color) → [Zebra Display] → Select a menu item and set the desired parameter.**

Menu item details

Zebra Display:
Sets whether to display the zebra pattern. ([Off] / [On])

Zebra Level:
Adjusts the brightness level of the zebra pattern. ([70] / [75] / [80] / [85] / [90]/ [95] / [100] / [100+])

Hint

- You can register values to check the correct exposure or overexposure as well as the brightness level for [Zebra Level]. The settings for correct exposure confirmation and overexposure confirmation are registered to [Custom 1] and [Custom 2] respectively in the default settings.
- To check the correct exposure, set a standard value and the range for the brightness level. The zebra pattern will appear on areas that fall within the range you set.
- To check the overexposure, set a minimum value for the brightness level. The zebra pattern will appear over areas with a brightness level equal to or higher than the value you set.

Note

- The zebra pattern is not displayed on devices connected via HDMI.

TP1002148516

5-069-971-11(6) Copyright 2026 Sony Corporation

ISO (still image/movie)

S&Q

Sensitivity to light is expressed by the ISO number (recommended exposure index). The larger the number, the higher the sensitivity.

1. **ISO on the control wheel → select desired setting.**
   - You can also select MENU → (Exposure/Color) → [Exposure] → [ISO].
   - You can change the value by 1/3 EV steps by turning the front dial as well as by turning the control wheel. You can change the value by 1 EV steps by turning the rear dial L or the rear dial R.

Menu item details

ISO AUTO:
Sets the ISO sensitivity automatically.

ISO 50 – ISO 204800:
Sets the ISO sensitivity manually. Selecting a larger number increases the ISO sensitivity.

Hint

- You can change the range of ISO sensitivity that is set automatically in [ISO AUTO] mode. Select [ISO AUTO] and press the right side of the control wheel, and set the desired values for [ISO AUTO Maximum] and [ISO AUTO Minimum].
- The higher the ISO value, the more noise will appear on the images.
- The available ISO settings will differ depending on whether you are shooting still images, shooting movies, or shooting slow-motion/quick-motion movies.
- When shooting movies, ISO values between 100 and 102400* are available. If the ISO value is set to a value larger than 102400*, the setting is automatically switched to 102400*. When you finish recording the movie, the ISO value returns to the original setting.
  * When [SteadyShot] is set to [Dynamic active], the upper limit of the ISO is ISO25600.
- When shooting movies, ISO values between 100 and 102400* are available. If the ISO value is set to a value smaller than 100, the setting is automatically switched to 100. When you finish recording the movie, the ISO value returns to the original setting.
  * When [SteadyShot] is set to [Dynamic active], the upper limit of the ISO is ISO25600.
- The available range for ISO sensitivity varies depending on the setting for [Gamma] under [Picture Profile].

Note

- [ISO] is set to [ISO AUTO] in the following shooting modes:
  — [Intelligent Auto]
- When the ISO sensitivity is set to a value lower than ISO 100, the range for recordable subject brightness (dynamic range) may decrease.
- When the ISO sensitivity is set to a value larger than ISO 51200, noise (stripes or unevenness) becomes more noticeable.
- When you select [ISO AUTO] with the shooting mode set to [P], [A], [S] or [M], the ISO sensitivity will be automatically adjusted within the set range.

- If you point the camera at an extremely strong light source while shooting images with a low ISO sensitivity, highlighted areas in the images may be recorded as black areas.

TP1002134015

5-069-971-11(6) Copyright 2026 Sony Corporation

ISO Range Limit (still image/movie)

S&Q

You can limit the range of ISO sensitivity when the ISO sensitivity is set manually.

1. **MENU → (Exposure/Color) → [Exposure] → [ISO Range Limit] → [Minimum] or [Maximum], and select the desired values.**

To set the range for [ISO AUTO]

If you want to adjust the range of ISO sensitivity that is automatically set in the [ISO AUTO] mode, select MENU → (Exposure/Color) → [Exposure] → [ISO] → [ISO AUTO], and then press the right side of the control wheel to select [ISO AUTO Maximum]/[ISO AUTO Minimum].

Note

- ISO sensitivity values beyond the specified range become unavailable. To select ISO sensitivity values beyond the specified range, reset [ISO Range Limit].

Related Topic

- ISO (still image/movie)

TP1002149643

5-069-971-11(6) Copyright 2026 Sony Corporation

ISO AUTO Min. SS

If you select [ISO AUTO] when the shooting mode is P (Program Auto) or A (Aperture Priority), you can set the shutter speed at which the ISO sensitivity starts changing.
This function is effective for shooting moving subjects. You can minimize subject blurring while also preventing camera shake.

1. **MENU → (Exposure/Color) → [Exposure] → [ISO AUTO Min. SS] → desired setting.**

Menu item details

SLOWER (Slower)/SLOW (Slow):
The ISO sensitivity will start to change at shutter speeds slower than [Standard], so you can shoot images with less noise.

STD (Standard):
The camera automatically sets the shutter speed based on the focal length of the lens.

FAST (Fast)/FASTER (Faster):
The ISO sensitivity will start to change at shutter speeds faster than [Standard], so you can prevent camera shake and subject blurring.

1/16000 — 30":
The ISO sensitivity starts to change at the shutter speed you have set.

Hint

- The difference in shutter speed at which ISO sensitivity starts to change between [Slower], [Slow], [Standard], [Fast], and [Faster] is 1 EV.

Note

- If the exposure is insufficient even when the ISO sensitivity is set to [ISO AUTO Maximum] in [ISO AUTO], in order to shoot with an appropriate exposure, the shutter speed will be slower than the speed set in [ISO AUTO Min. SS].
- In the following situations, the shutter speed may not function as set:
  - When using the flash to shoot bright scenes. (The maximum shutter speed is limited to the flash-syncing speed of 1/250 second.)
  - When using the flash to shoot dark scenes with the [Flash Mode] set to [Fill-flash]. (The minimum shutter speed is limited to the speed automatically determined by the camera.)

Related Topic

- Program Auto
- Aperture Priority
- ISO (still image/movie)

TP1002134016

5-069-971-11(6) Copyright 2026 Sony Corporation

White Balance (still image/movie)

S&Q

Corrects the tone effect of the ambient light condition to record a neutral white subject in white. Use this function when the color tones of the image did not come out as you expected, or when you want to change the color tones on purpose for photographic expression.

1. **MENU → (Exposure/Color) → [White Balance] → [White Balance] → desired setting.**

Menu item details

AWB Auto / AWB Auto: Ambience / AWB Auto: White / Daylight / Shade / Cloudy / Incandescent / -1 Fluor.: Warm White / 0 Fluor.: Cool White / +1 Fluor.: Day White / +2 Fluor.: Daylight / Flash (only when shooting still images) / Underwater Auto :
When you select a light source that illuminates the subject, the product adjusts the color tones to suit to the selected light source (preset white balance). When you select [Auto], the product automatically detects the light source and adjusts the color tones.

C.Temp./Filter:
Adjusts the color tones depending on the light source. Achieves the effect of CC (Color Compensation) filters for photography.

Custom 1/Custom 2/Custom 3:
Memorizes the basic white color under the light conditions for the shooting environment.

Hint

- You can display the fine adjustment screen and perform fine adjustments of the color tones as required by pressing the right side of the control wheel. When [C.Temp./Filter] is selected, you can change the color temperature by turning the rear dial L or the rear dial R instead of pressing the right side of the control wheel.
- If the color tones do not come out as you expected in the selected settings, perform [WB bracket] shooting.
- AWB (Auto: Ambience), AWB (Auto: White) is displayed only when [Priority Set in AWB] is set to [Ambience] or [White].
- If you want to moderate abrupt white balance switching, such as when the recording environment switches during movie recording, you can change the white balance switching speed with the [Shockless WB] function.

Note

- [White Balance] is fixed to [Auto] in the following shooting modes:
  – [Intelligent Auto]
- If you use a mercury lamp or a sodium lamp as a light source, the accurate white balance will not be obtained because of the characteristics of the light. It is recommended to shoot images using a flash or select [Custom 1] to [Custom 3].

Related Topic

- Capturing a standard white color to set the white balance (custom white balance)
- Priority Set in AWB (still image/movie)
- WB bracket

- Shockless WB

TP1002134019

5-069-971-11(6) Copyright 2026 Sony Corporation

Interchangeable Lens Digital Camera
ILCE-7M5 α7V

Capturing a standard white color to set the white balance (custom white balance)

S&Q

In a scene where the ambient light consists of multiple types of light sources, it is recommended to use the custom white balance in order to accurately reproduce the whiteness. You can register 3 settings.

1. **MENU → (Exposure/Color) → [White Balance] → [White Balance] → Select from among [Custom 1] to [Custom 3], and then press the right side of the control wheel.**

2. **Select SET (custom white balance set), and then press the center of the control wheel.**

3. **Hold the product so that the white area fully covers the white-balance capture frame, and then press the center of the control wheel.**

   After the shutter sound is heard and the message [Captured the custom WB data.] is displayed, the calibrated values (Color Temperature and Color Filter) are displayed.

   - You can adjust the position of the white-balance capture frame by pressing the top/bottom/left/right side of the control wheel.
   - You can change the size of the white-balance capture frame by pressing the Fn (function) button.
   - After capturing a standard white color, you can display the fine adjustment screen by pressing the right side of the control wheel. You can finely adjust the color tones as needed.
   - You can bring the white-balance capture frame back to the center by pressing the (Delete) button.
   - No shutter sound is produced in the following cases.
     - In the movie recording mode
     - When [Silent Mode] is set to [On]

4. **Press the center of the control wheel.**

   The calibrated values will be registered. The monitor returns to the MENU display while retaining the memorized custom white balance setting.

   - The registered custom white balance setting will remain memorized until overwritten by the another setting.

Hint

- You can also set the size of the white-balance capture frame in [WB Capt. Frame Size].

Note

- The message [Capturing of the custom WB failed.] indicates that the value is in the unexpected range, for example when the subject is too vivid. You can register the setting at this point, but it is recommended that you set the white balance again. When an error value is set, the indicator (custom white balance) turns orange on the recording information display. The indicator will be displayed in white when the set value is in the expected range.
- If you use a flash when capturing a basic white color, the custom white balance will be registered with the lighting from the flash. Be sure to use a flash whenever you shoot with recalled settings that were registered with a flash.

Related Topic

- WB Capt. Frame Size (still image/movie)

TP1002134020

5-069-971-11(6) Copyright 2026 Sony Corporation

WB Capt. Frame Size (still image/movie)

S&Q

You can change the size of the white-balance capture frame used when setting the custom white balance.

1. **MENU → (Exposure/Color) → [White Balance] → [WB Capt. Frame Size] → desired setting.**

Menu item details

Large/Medium/Small

Hint

- You can also change the size of the capture frame by pressing the Fn (function) button on the setting screen for the custom white balance under [White Balance].

Related Topic

- Capturing a standard white color to set the white balance (custom white balance)

TP1002158453

5-069-971-11(6) Copyright 2026 Sony Corporation

Priority Set in AWB (still image/movie)

S&Q

Selects which tone to prioritize when shooting under lighting conditions such as incandescent light when [White Balance] is set to [Auto].

1. **MENU → (Exposure/Color) → [White Balance] → [Priority Set in AWB] → desired setting.**

Menu item details

Standard:
Shoots with standard auto white balance. The camera automatically adjusts the color tones.

Ambience:
Prioritizes the color tone of the light source. This is suitable when you want to produce a warm atmosphere.

White:
Prioritizes a reproduction of white color when the color temperature of the light source is low.

Related Topic

- White Balance (still image/movie)

TP1002142816

5-069-971-11(6) Copyright 2026 Sony Corporation

Shutter AWB Lock

You can set whether or not to lock the white balance while the shutter button is pressed when [White Balance] is set to [Auto] or [Underwater Auto].
This function prevents unintentional changes to the white balance during continuous shooting or when shooting with the shutter button pressed halfway down.

1. **MENU → (Exposure/Color) → [White Balance] → [Shutter AWB Lock] → desired setting.**

Menu item details

Shutter Half Press:
Locks the white balance while the shutter button is pressed halfway down, even in the auto white balance mode. The white balance is also locked during continuous shooting.

Cont. Shooting:
Locks the white balance to the setting in the first shot during continuous shooting, even in the auto white balance mode.

Off:
Operates with the normal auto white balance.

About [AWB Lock Hold] and [AWB Lock Toggle]

You can also lock the white balance in the auto white balance mode by assigning [AWB Lock Hold] or [AWB Lock Toggle] to the custom key. If you press the assigned key during shooting, the white balance will be locked.
The [AWB Lock Hold] function locks the white balance by stopping the automatic white balance adjustment while the button is pressed.
The [AWB Lock Toggle] function locks the white balance by stopping the automatic white balance adjustment after the button is pressed once. When you press the button again, the AWB lock is released.

- If you want to lock the white balance while recording a movie in the auto white-balance mode, also assign [AWB Lock Hold] or [AWB Lock Toggle] to the custom key.

Hint

- When you shoot with the flash while the automatic white balance is locked, the resulting color tones may be unnatural because the white balance was locked before the flash was emitted. In this case, set [Shutter AWB Lock] to [Off] or [Cont. Shooting], and do not use the [AWB Lock Hold] function or [AWB Lock Toggle] function when shooting. Alternatively, set [White Balance] to [Flash].

Related Topic

- White Balance (still image/movie)
- Assigning frequently used functions to buttons and dials (Custom Key/Dial Set.)

TP1002149644

5-069-971-11(6) Copyright 2026 Sony Corporation

Shockless WB

S&Q

Sets the speed at which the white balance switches during movie recording, such as when the setting for [White Balance] or [Priority Set in AWB] is changed.

1. **MENU → (Exposure/Color) → [White Balance] → [Shockless WB] → desired setting.**

Menu item details

Off:
The white balance will switch immediately if you change the white balance setting during movie recording.

1 (Fast)/2/3 (Slow):
You can select the speed at which the white balance switches during movie shooting in order to make the white balance of the movie change more smoothly.
The speed settings in the order of fastest to slowest are [1 (Fast)], [2], and [3 (Slow)].

Note

- This function does not affect the speed at which the white balance changes when [White Balance] is set to [Auto] or [Underwater Auto].
- Even if a setting other than [Off] is selected, the following will be immediately applied to the movie regardless of the speed setting.
  - Fine adjustments to the color tones
  - Changes to the color temperature using [C.Temp./Filter]

Related Topic

- White Balance (still image/movie)

TP1002151158

5-069-971-11(6) Copyright 2026 Sony Corporation

Log shooting

Log shooting has a wider dynamic range than normal movie recording, which makes color grading more flexible, bringing advantages in terms of picture effects and exposure adjustment for editing.

For details on Log shooting, refer to the following website.

https://helpguide.sony.net/di/pp/v1/en/index.html

TP1002154674

5-069-971-11(6) Copyright 2026 Sony Corporation

Log Shooting Setting

S&Q

Configures the settings for Log shooting.

1. **MENU → (Shooting) → [Image Quality/Rec] → [Log Shooting Setting] → desired setting.**

Menu item details

Log Shooting:
Sets whether to perform Log shooting. With [On (Flexible ISO)], you can record S-Log material with the exposure set by adjusting the ISO according to the shooting scene. (Off/On (Flexible ISO))

Color Gamut:
Sets the color gamut. (S-Gamut3.Cine/S-Log3 / S-Gamut3/S-Log3)

Embed LUT File:
Sets whether to embed LUT files in recorded data. (On / Off)

Note

- [Embed LUT File] is locked to [Off] when using SDHC cards.
- When [Log Shooting] is set to [On (Flexible ISO)], this may cause an error in the white balance custom setup. In such a case, temporarily set [Log Shooting] to [Off], perform the white balance custom setup, and then reset [Log Shooting] to [On (Flexible ISO)].

Related Topic

- Select LUT
- Picture Profile (still image/movie)
- HDMI Output Settings (movie)

TP1002154675

5-069-971-11(6) Copyright 2026 Sony Corporation

Select LUT

Selects which LUT to apply to movies. You can choose the LUT from among three presets and 16 LUTs that you can register.

1. **MENU → (Exposure/Color) → [Color/Tone] → [Select LUT] → desired setting.**

Menu item details

S-Log3:
Emphasizes the expression of gradations from shadow to mid-tone. The tone of the images is similar to the characteristics of images that have been scanned from film for shooting.

s709:
Selects the s709 LUT for color tones similar to the film color preferred in movie and drama productions.

709(800%):
Selects the R709 LUT for contrast in color tones with true-to-life color reproduction.

User1–User16:
Selects registered LUTs. LUTs can be edited and registered by selecting User1–User16, and pressing the right side of the control wheel to open the setting detail screen.

Related Topic

- Log Shooting Setting
- Manage User LUTs
- Display LUT

TP1002154676

5-069-971-11(6) Copyright 2026 Sony Corporation

Manage User LUTs

S&Q

You can register LUTs as User1–User16 on the camera. Also, you can change the settings for the registered LUT files.

Registering a LUT

1. Save the LUT file you want to register on a memory card.
   - Save the file to the following path.
     For SD cards: /Private/Sony/PRO/LUT
     For CFexpress Type A memory cards: /Sony/PRO/LUT
   - File format: CUBE file (.cube) for a 17-point or 33-point
   - File name: 63 alphanumeric characters (single-byte code) or less including ".cube"
2. MENU → (Exposure/Color) → [Color/Tone] → [Manage User LUTs] → [Import/Edit].
3. Select the user LUT area (User1–User16) in which to register the data.
4. Select the memory card on which the LUT file is stored.
5. Select the file you want to register and select [OK].

Editing a LUT

The following edits can be made to a user LUT area.
Input: Selects either [S-Gamut3.Cine/S-Log3] or [S-Gamut3/S-Log3].
AE Level Offset: Sets the compensation value for the AE tracking level when using this LUT. (0EV, 1/3EV, 2/3EV, 1EV, 4/3EV, 5/3EV, 2EV).
Import: Registers a LUT file to the selected User number.
Delete: Deletes the LUT file registered to the selected User number.

To delete LUTs in bulk

1. MENU → (Exposure/Color) → [Color/Tone] → [Manage User LUTs] → [Delete All].
   - All of the LUTs registered to User1–User16 are deleted.

Note

- When using SDHC cards, filenames for registering LUT files are displayed in the 8.3 format.

Related Topic

- Select LUT
- Display LUT

TP1002154677

5-069-971-11(6) Copyright 2026 Sony Corporation

Display LUT

The monitor can display images with the LUT reflected during movie shooting and playback for a preview of the image after color grading.

1. **MENU → (Setup) → [Display Option] → [Display LUT] → desired setting.**

Menu item details

On:
Displays images with the LUT reflected during movie shooting and playback.

Off:
Does not display images with the LUT reflected during movie shooting and playback.

Hint

- If you assign [Display LUT Switch] to [Custom Key/Dial Set.], you can switch [Display LUT] on and off simply by pressing a button.

Related Topic

- Select LUT
- Manage User LUTs

TP1002154681

5-069-971-11(6) Copyright 2026 Sony Corporation

Interchangeable Lens Digital Camera
ILCE-7M5 α7V

Creative Look (still image/movie)

S&Q

"Look" is a term referring to the looks and impressions of images generated by various factors, such as color, sharpness, brightness, etc. With [Creative Look], you can choose the finish of an image by selecting a preferred look from among preinstalled looks. In addition, you can fine-tune the contrast, highlights, shadows, fade, saturation, sharpness, sharpness range, and clarity for each "Look."

1. **MENU → (Exposure/Color) → [Color/Tone] → [Creative Look].**

2. **Select the desired "Look" or [Custom Look] using the top/bottom of the control wheel.**

3. **To adjust (Contrast), (Highlights), (Shadows), (Fade), (Saturation), (Sharpness), (Sharpness Range) and (Clarity), move to the right using the right side of the control wheel. Select the desired item using the right/left sides, and then select the value using the top/bottom sides.**

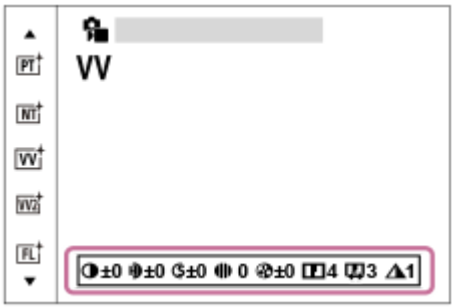

4. **When selecting [Custom Look], move to the right using the right side of the control wheel, and then select the desired "Look."**

   - Using [Custom Look], you can recall the same "Look" presets with slightly different settings.

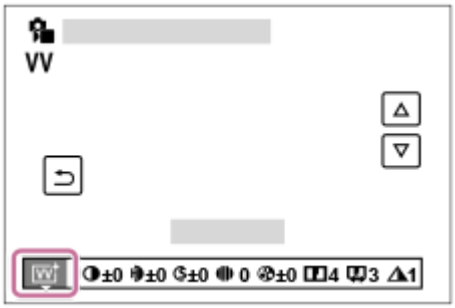

Menu item details

ST(Standard):
Standard finish for a wide range of subjects and scenes.

PT(Portrait):
For capturing skin in a soft tone, ideally suited for shooting portraits.

NT(Neutral):
The saturation and sharpness are lowered for shooting images in subdued tones. This is also suitable for capturing image material to be modified with a computer.

VV(Vivid):
The saturation and contrast are heightened for shooting striking images of colorful scenes and subjects such as flowers, spring greenery, blue sky, or ocean views.

VV2(Vivid 2):
Creates an image with bright and vivid colors with rich clarity.

FL(Film):
Creates an image with moody finish by applying sharp contrast to the calm coloring as well as the impressive sky and colors of the greens.

FL2(Film 2):
Creates an image with a nostalgic look through high contrast calm coloring.

FL3(Film 3):
Creates an image with a lighthearted look through clear coloring by slightly suppressing the contrast.

IN(Instant):
Creates an image with matte textures by suppressing the contrast and saturation.

SH(Soft Highkey):
Creates an image with bright, transparent, soft, and vivid mood.

BW(Black & White):
For shooting images in black and white monotone.

SE(Sepia):
For shooting images in sepia monotone.

Registering preferred settings (Custom Look):
Select the six custom look (the boxes with numbers on the left side) to register preferred settings. Then select the desired settings using the right button.
You can recall the same “Look” presets with slightly different settings.

To adjust in greater detail

Based on each “Look,” items such as contrast can be adjusted to your liking. You can adjust not only the preset “Looks,” but also each [Custom Look], a function that allows you to register your favorite settings.
Select an item to be set by pressing the right/left sides of the control wheel, then set the value using the top/bottom sides of the control wheel.
When a setting value is changed from the default value, ✱ (star mark) is added next to the “Look” icon displayed on the shooting screen.

Contrast:
The higher the value selected, the more the difference of light and shadow is accentuated, and the bigger the effect on the image. (-9 to +9)

Highlights:
Adjusts the brightness of the bright areas. When a higher value is selected, the image becomes brighter. (-9 to +9)

Shadows:
Adjusts the darkness of the dark areas. When a higher value is selected, the image becomes brighter. (-9 to +9)

Fade:
Adjusts the degree of fade. A larger value makes the effect greater. (0 to 9)

Saturation:
The higher the value selected, the more vivid the color. When a lower value is selected, the color of the image is restrained and subdued. (-9 to +9)

Sharpness:
Adjusts the sharpness. The higher the value selected, the more the contours are accentuated, and the lower the value selected, the more the contours are softened. (0 to 9)

Sharpness Range:
Adjust the range where the sharpness effect is applied. A larger value makes the sharpness effect apply to finer outlines. (1 to 5)

Clarity:
Adjusts the degree of clarity. A larger value makes the effect greater. (0 to 9)

To reset adjusted values for each “Look”

Adjusted values such as contrast that you have changed as desired can be collectively reset for each “Look.” Press the (delete) button on the adjustment screen for the “Look” that you want to reset. All adjusted values that have been changed will return to their default values.

Hint

- For [Sharpness], [Sharpness Range], and [Clarity], take a test shot and either enlarge and play it on the camera monitor, or output it to a playback device to check the effect. Then, readjust the setting if needed.

Note

- [Creative Look] is fixed to [-] in the following situations:
  - [Intelligent Auto]
  - [Picture Profile] is set to other than [Off].
  - [Log Shooting] is set to [On (Flexible ISO)].
- When this function is set to [BW(Black & White)] or [SE(Sepia)], [Saturation] cannot be adjusted.
- In the movie mode, [Sharpness Range] cannot be adjusted.

TP1002134022

5-069-971-11(6) Copyright 2026 Sony Corporation

Picture Profile (still image/movie)

S&Q

Allows you to change the settings for the color, gradation, etc.
For details on “Picture Profile,” refer to
https://helpguide.sony.net/di/pp/v1/en/index.html
Although [Picture Profile] can be used for both still images and movies, the function is designed mainly for movies.

Customizing the picture profile

You can customize the picture quality by adjusting picture profile items such as [Gamma] and [Detail]. When setting these parameters, connect the camera to a TV or monitor, and adjust them while observing the picture on the screen.

1. **MENU → (Exposure/Color) → [Color/Tone] → [Picture Profile] → the profile you want to change.**
2. **Move to the item index screen by pressing the right side of the control wheel.**
3. **Select the item to change using the top/bottom sides of the control wheel.**
4. **Select the desired value using the top/bottom sides of the control wheel and press in the center.**

Using the preset of the picture profile

The default settings [PP1] through [PP11] for movies have been set in advance in the camera based on various shooting conditions.
MENU → (Exposure/Color) → [Color/Tone] → [Picture Profile] → desired setting.

PP1:
Example setting using [Movie] gamma.
PP2:
Example setting using [Still] gamma.
PP3:
Example setting of natural color tone using the [ITU709] gamma.
PP4:
Example setting of a color tone faithful to the ITU709 standard.
PP5:
Example setting using [Cine1] gamma.
PP6:
Example setting using [Cine2] gamma.
PP10:
Example setting for recording HDR movies using [HLG2] gamma.
PP11:
Example setting using [S-Cinetone] gamma.
PPLUT1–PPLUT4 (only when shooting movies):
Shoots and records movies with the user LUT applied.

To register user LUTs (PPLUT1–PPLUT4)

You can apply the LUT of your choice to the recorded images by assigning user LUTs registered using [Manage User LUTs] to PPLUT1–PPLUT4.

Setting procedure:

1. Select PPLUT1–PPLUT4 on the selection screen for [Picture Profile], and then press the right side of the control wheel.
2. Select [Basic Look] and press the center.
3. Select a LUT to use as [Basic Look] from the listed user LUTs.

HDR movie recording

The camera can record HDR movies when a gamma from [HLG], [HLG1] to [HLG3] is selected in the picture profile. Picture profile preset [PP10] provides an example setting for HDR recording. Movies recorded using [PP10] can be viewed with a wider range of brightness than usual when played back on a TV supporting Hybrid Log-Gamma (HLG). This way, even scenes with a wide range of brightness can be recorded and displayed faithfully, without looking under or over-exposed. HLG is used in HDR TV program production, as defined in the international standard Recommendation ITU-R BT.2100.

Items of the picture profile

Black Level

Sets the black level. (–15 to +15)

Gamma

Selects a gamma curve.

Movie: Standard gamma curve for movies

Still: Standard gamma curve for still images

S-Cinetone: Gamma curve designed to achieve cinematic gradations and color expressions. This setting enables shooting with softer color reproduction ideal for portrait shooting.

Cine1: Softens the contrast in dark parts and emphasizes gradation in bright parts to produce a relaxed color movie. (equivalent to HG4609G33)

Cine2: Similar to [Cine1] but optimized for editing with up to 100% video signal. (equivalent to HG4600G30)

Cine3: Intensifies the contrast in light and shade more than [Cine1] and strengthens gradation in black.

Cine4: Strengthens the contrast in dark parts more than [Cine3].

ITU709: Gamma curve that corresponds to ITU709.

S-Log3: Gamma curve for [S-Log3] with more similar features to film. This setting is based on the assumption that the picture will be processed after shooting.

HLG: Gamma curve for HDR recording. Equivalent to the HDR standard Hybrid Log-Gamma, ITU-R BT.2100.

HLG1: Gamma curve for HDR recording. Emphasizes noise reduction. However, shooting is restricted to a narrower dynamic range than with [HLG2] or [HLG3].

HLG2: Gamma curve for HDR recording. Provides a balance of dynamic range and noise reduction.

HLG3: Gamma curve for HDR recording. Wider dynamic range than [HLG2]. However, noise may increase.

- [HLG1], [HLG2], and [HLG3] all apply a gamma curve with the same characteristics, but each offers a different balance between dynamic range and noise reduction. Each has a different maximum video output level, as follows: [HLG1]: approx. 87%, [HLG2]: approx. 95%, [HLG3]: approx. 100%.

Black Gamma

Corrects gamma in low intensity areas.

[Black Gamma] is fixed at “0” and cannot be adjusted when [Gamma] is set to [HLG], [HLG1], [HLG2], or [HLG3].

Range: Selects the correcting range. (Wide / Middle / Narrow)

Level: Sets the correcting level. (-7 (maximum black compression) to +7 (maximum black stretch))

Knee

Sets knee point and slope for video signal compression to prevent over-exposure by limiting signals in high intensity areas of the subject to the dynamic range of your camera.
When [Gamma] is set to the following, and [Mode] is set to [Auto], [Knee] is unavailable. [Knee] can be used when [Mode] is set to [Manual].

- [Still]
- [Cine1]
- [Cine2]
- [Cine3]
- [Cine4]
- [S-Log3]
- [HLG]
- [HLG1]
- [HLG2]
- [HLG3]

Mode: Selects auto/manual settings.

- Auto: The knee point and slope are set automatically.
- Manual: The knee point and slope are set manually.

Auto Set: Settings when [Auto] is selected for [Mode].

- Max Point: Sets the maximum point of the knee point. (90% to 100%)
- Sensitivity: Sets the sensitivity. (High / Mid / Low)

Manual Set: Settings when [Manual] is selected for [Mode].

- Point: Sets the knee point. (75% to 105%)
- Slope: Sets the knee slope. (-5 (gentle) to +5 (steep))

Color Mode

Sets type and level of colors.
In [Color Mode], only [BT.2020] and [709] are available when [Gamma] is set to [HLG], [HLG1], [HLG2], or [HLG3].

Movie: Suitable colors when [Gamma] is set to [Movie].

Still: Suitable colors when [Gamma] is set to [Still].

S-Cinetone: Suitable colors when [Gamma] is set to [S-Cinetone].

Cinema: Suitable colors when [Gamma] is set to [Cine1] or [Cine2].

Pro: Similar color tones to the standard image quality of Sony professional cameras (when combined with ITU709 gamma)

ITU709 Matrix: Colors corresponding to ITU709 standard (when combined with ITU709 gamma)

Black & White: Sets the saturation to zero for shooting in black and white.

S-Gamut3.Cine: Setting based on the assumption that the pictures will be processed after shooting. Used when [Gamma] is set to [S-Log3]. This setting allows you to shoot in a color space that can easily be converted for digital cinema.

S-Gamut3: Setting based on the assumption that the pictures will be processed after shooting. Used when [Gamma] is set to [S-Log3]. This setting allows you to shoot in a wide color space.

BT.2020: Standard color tone when [Gamma] is set to [HLG], [HLG1], [HLG2], or [HLG3].

709: Color tone when [Gamma] is set to [HLG], [HLG1], [HLG2], or [HLG3] and movies are recorded with HDTV color (BT.709).

Saturation

Sets the color saturation. (-32 to +32)

Color Phase

Sets the color phase. (-7 to +7)

Detail

Sets items for [Detail].

Level: Sets the [Detail] level. (-7 to +7)

Adjust: The following parameters can be selected manually.

- Mode: Selects auto/manual setting. (Auto (automatic optimization) / Manual (The details are set manually.))
- V/H Balance: Sets the vertical (V) and horizontal (H) balance of DETAIL. (-2 (off to the vertical (V) side) to +2 (off to the horizontal (H) side))
- B/W Balance: Selects the balance of the lower DETAIL (B) and the upper DETAIL (W). (Type1 (off to the lower DETAIL (B) side) to Type5 (off to the upper DETAIL (W) side))
- Limit: Sets the limit level of [Detail]. (0 (Low limit level: likely to be limited) to 7 (High limit level: unlikely to be limited))
- Crispening: Sets the crispening level. (0 (shallow crispening level) to 7 (deep crispening level))
- Hi-Light Detail: Sets the [Detail] level in the high intensity areas. (0 to 4)

To copy the settings to another picture profile number

You can copy the settings of the picture profile to another picture profile number.

MENU → (Exposure/Color) → [Color/Tone] → [Picture Profile] → desired setting → [Copy].

To reset the picture profile to the default setting

You can reset the picture profile to the default setting. You cannot reset all picture profile settings at once.

MENU → (Exposure/Color) → [Color/Tone] → [Picture Profile] → desired setting → [Reset].

Note

- If you want to select different settings for movies and still images, add a check mark to [Picture Profile] under [Different Set for Still/Mv].
- If you develop RAW images with shooting settings, the following settings are not reflected:
  - Black Level
  - Black Gamma
  - Knee
- If you change [Gamma], the available ISO value range changes.
- There may be more noise in dark parts depending on the gamma settings. It may improve by setting the lens compensation to [Off].
- When using the S-Log3 gamma, noise becomes more noticeable compared to when using other gammas. If the noise is still considerable even after processing the images, it may be improved by shooting with a brighter setting. However, the dynamic range becomes narrower accordingly when you shoot with a brighter setting. We recommend checking the picture in advance by test shooting when using S-Log3.
- Setting [S-Log3] may cause an error in the white balance custom setup. In this case, perform custom setup with a gamma other than [S-Log3] first, and then reselect the [S-Log3] gamma.
- Setting PPLUT1–PPLUT4 may cause an error in the white balance custom setup. In this case, first perform the custom setup with a setting other than PPLUT1–PPLUT4, and then reselect PPLUT1–PPLUT4.
- If you set [Slope] to +5 in [Manual Set] under [Knee], [Knee] will be disabled.
- S-Gamut3.Cine and S-Gamut3 are color spaces exclusive to Sony. However, this camera's S-Gamut setting does not support the whole S-Gamut color space; it is a setting to achieve a color reproduction equivalent to S-Gamut.
- [Picture Profile] is fixed to [Off] in the following situation:
  - [Log Shooting] is set to [On (Flexible ISO)]
  - [Drive Mode] is set to [Cont. Bracket], [Single Bracket], [Focus Bracket], [WB bracket] or [DRO Bracket]

Related Topic

- Gamma Display Assist
- Different Set for Still/Mv

TP1002142821

5-069-971-11(6) Copyright 2026 Sony Corporation

Soft Skin Effect (still image/movie)

S&Q

Sets the effect used for shooting the skin smoothly when a face is recognized.

1. **MENU → (Exposure/Color) → [Color/Tone] → [Soft Skin Effect] → desired setting.**

Menu item details

Off:
Does not use the [Soft Skin Effect] function.

On:
Uses the [Soft Skin Effect]. You can set the effect level by pressing the right/left side of the control wheel. ([On: High]/[On: Mid]/[On: Low])

Note

- [Soft Skin Effect] is not available when [File Format] under [Image Quality Settings] is set to [RAW].
- [Soft Skin Effect] is not available for RAW images when [File Format] under [Image Quality Settings] is set to [RAW & JPEG] / [RAW & HEIF].
- [Soft Skin Effect] is not available when you use the digital zoom function in the still image shooting mode.

TP1002153942

5-069-971-11(6) Copyright 2026 Sony Corporation

Interchangeable Lens Digital Camera
ILCE-7M5 α7V

Drive Mode

S&Q

Select the appropriate mode for the subject, such as single shooting, continuous shooting or bracketing shooting.

1. **Select / (Drive Mode) on the control wheel → desired setting.**
   - You can also set the drive mode by selecting MENU → (Shooting) → [Drive Mode] → [Drive Mode].
2. **Select the desired mode using the right/left side of the control wheel.**

Menu item details

Single Shooting:
Shoots one image when you press the shutter button.

Cont. Shooting:
Shoots images continuously while you press and hold down the shutter button.

Self-timer(Single) :
Shoots an image after a designated number of seconds have elapsed since the shutter button was pressed.

Self-timer(Cont):
Shoots a designated number of images after a designated number of seconds have elapsed since the shutter button was pressed.

BRK C Cont. Bracket:
Shoots images while holding the shutter button down, each with different degrees of exposure.

BRK S Single Bracket:
Shoots a specified number of images, one by one, each with a different degrees of exposure.

BRK FOCUS Focus Bracket:
Shoots multiple images while shifting the focus position.

BRK WB WB bracket:
Shoots a total of three images, each with different color tones according to the selected settings for white balance, color temperature and color filter.

BRK DRO DRO Bracket:
Shoots a total of three images, each at a different degree of D-Range Optimizer.

Related Topic

- Cont. Shooting
- Self-timer(Single)
- Self-timer(Cont)
- Cont. Bracket
- Single Bracket
- Focus Bracket
- WB bracket
- DRO Bracket

5-069-971-11(6) Copyright 2026 Sony Corporation

Drive Mode Limit

By limiting the types of available drive modes in advance, you can more quickly select the desired setting when [Drive Mode] is selected.

1. **MENU → (Shooting) → [Drive Mode] → [Drive Mode Limit] → Add check marks to the drive modes that you want to use, and then select [OK].**

   The types of drive modes marked with ✓ (check mark) will be available as settings.

Hint

- When you assign [Switch Drive Mode] to the desired key using [Custom Key/Dial Set.], the drive mode changes every time you press the assigned key. By limiting the types of selectable drive modes with [Drive Mode Limit] in advance, you can more quickly select a drive mode setting from among limited drive modes.

Note

- Types of drive modes that do not have a check mark cannot be selected using MENU or the Fn (function) menu. To select one, add a check mark using [Drive Mode Limit].

Related Topic

- Drive Mode
- Assigning frequently used functions to buttons and dials (Custom Key/Dial Set.)

TP1002158454

5-069-971-11(6) Copyright 2026 Sony Corporation

Interchangeable Lens Digital Camera
ILCE-7M5 α7V

Cont. Shooting

S&Q

Shoots images continuously while you press and hold down the shutter button.

1. **Select / (Drive Mode) of the control wheel → [Cont. Shooting].**
   - You can also set the continuous shooting by selecting MENU → (Shooting) → [Drive Mode] → [Drive Mode].
2. **Select the desired mode using the right/left side of the control wheel.**

Menu item details

Hi+ Continuous Shooting: Hi+ / Hi Continuous Shooting: Hi / MID Continuous Shooting: Mid/ Lo Continuous Shooting: Lo

The listed continuous shooting speeds reflect the condition of the camera when shipped from the factory.

Continuous shooting setting	Shutter Type: Mechanical Shutter	Shutter Type: Electronic Shutter *1 *2
Continuous Shooting: Hi+	Maximum 10 images/second*3	Maximum 30 images/second*4 *5 *6
Continuous Shooting: Hi	Maximum 8 images/second*3	Maximum 20 images/second*4 *5
Continuous Shooting: Mid	Maximum 6 images/second*3	Maximum 15 images/second*4
Continuous Shooting: Lo	Maximum 3 images/second*3	Maximum 5 images/second*4

*1 This is the speed when [Aperture Drive in AF] is set to [Standard]. When [Aperture Drive in AF] is set to [Focus Priority], the continuous shooting speed may be slower.
*2 When using the electronic shutter, you can select your preferred continuous shooting speed by selecting MENU → (Shooting) → [Drive Mode] → [Cont. Shooting Speed].
*3 When the aperture value is larger than F22, the focus is locked to the setting in the first shot.
*4 When [Aperture Drive in AF] is set to [Standard] or [Silent Priority] and the aperture value is larger than F22, the focus is locked to the setting in the first shot.
*5 When [Focus Mode] is [Continuous AF], the continuous shooting speed varies depending on the lens attached. For details, refer to the lens compatibility information support page.
*6 When the continuous shooting speed is set to [30 images/s], the shutter speed cannot be set slower than 1/30 second.

Number of still images recordable with continuous shooting

The following table shows estimated numbers of recordable still images with [Drive Mode] set to [Continuous Shooting: Hi+].
The numbers may vary depending on the shooting conditions and the memory card.

JPEG Quality/HEIF Quality: [Fine]
Image Size: [L:33M]

File Format	Shutter Type: Mechanical Shutter	Shutter Type: Electronic Shutter
JPEG	Approx. 1 000 images or more	Approx. 185 images
HEIF	Approx. 1 000 images or more	Approx. 185 images
RAW & JPEG (RAW: Compressed)	Approx. 1 000 images or more	Approx. 85 images
RAW & HEIF (RAW: Compressed)	Approx. 1 000 images or more	Approx. 85 images
RAW (Compressed)	Approx. 1 000 images or more	Approx. 95 images
RAW & JPEG (RAW: Compressed(HQ))	Approx. 130 images	Approx. 35 images
RAW & HEIF (RAW: Compressed(HQ))	Approx. 130 images	Approx. 35 images
RAW (Compressed(HQ))	Approx. 170 images	Approx. 35 images
RAW & JPEG (RAW: Lossless Comp)	Approx. 130 images	Approx. 35 images
RAW & HEIF (RAW: Lossless Comp)	Approx. 130 images	Approx. 35 images
RAW (Lossless Comp)	Approx. 170 images	Approx. 35 images

- Numbers of recordable images are estimates based on shooting under the following conditions:
  - Ambient temperature: 25°C (77°F)
  - Using a Sony CEA-G160T CFexpress Type A memory card (sold separately)
  - Number of memory cards inserted: 1

Hint

- To continuously adjust the focus and exposure during continuous shooting, set as follows:
  - [Focus Mode]: [Continuous AF]
  - [AEL w/ Shutter]: [Off] or [Auto]
- To shoot more images during continuous shooting using the electronic shutter, set the continuous shooting speed to 20 images per second or slower. You can continuously shoot approximately 1,000 images or more in the JPEG/HEIF format.

Note

- During continuous shooting, the focus is locked to the setting in the first shot when the F-value is greater than F22.
- The subject is not displayed in real time on the monitor or viewfinder when [Shutter Type] is set to [Mechanical Shutter] and shooting in [Continuous Shooting: Hi+] mode.
- The speed of continuous shooting decreases when you shoot with a flash.

Related Topic

- Remain Shoot Display (still image)
- Selecting the focus method (Focus Mode)
- AEL w/ Shutter

TP1002134007

5-069-971-11(6) Copyright 2026 Sony Corporation

Cont. Shooting Speed

S&Q

Sets the continuous shooting speed when using the electronic shutter.

1. **MENU → (Shooting) → [Drive Mode] → [Cont. Shooting Speed] → desired setting item.**

Menu item details

Hi+(E-Shutter):
Sets the continuous shooting speed when [Drive Mode] is set to [Continuous Shooting: Hi+]. ([30 images/s]/[20 images/s]/[15 images/s]/[10 images/s]/[5 images/s])

Hi(E-Shutter):
Sets the continuous shooting speed when [Drive Mode] is set to [Continuous Shooting: Hi]. ([20 images/s]/[15 images/s]/[10 images/s]/[5 images/s])

Mid(E-Shutter):
Sets the continuous shooting speed when [Drive Mode] is set to [Continuous Shooting: Mid]. ([20 images/s]/[15 images/s]/[10 images/s]/[5 images/s])

Lo(E-Shutter):
Sets the continuous shooting speed when [Drive Mode] is set to [Continuous Shooting: Lo]. ([20 images/s]/[15 images/s]/[10 images/s]/[5 images/s])

Note

- The numbers in the names of the setting values indicate the maximum continuous shooting speed when the setting value is selected.

Related Topic

- Cont. Shooting

TP1002152719

5-069-971-11(6) Copyright 2026 Sony Corporation

Cnt Shoot Speed Boost

You can temporarily perform continuous shooting at a specified speed. By quickly changing the continuous shooting speed according to the situation, you can shoot only decisive moments in high-speed continuous shooting and reduce the number of shots in other scenes.

1. **MENU → (Setup) → [Operation Customize] → [Custom Key/Dial Set.] → Assign [Cnt Sht Spd Bst w/ Hold] or [Cnt Sht Spd Bst Toggle] to the desired key and set the continuous shooting speed when using [Cnt Shoot Speed Boost].**
   - You can also set the continuous shooting speed in MENU → (Shooting) → [Drive Mode] → [Cnt Sht Spd Bst Settings].
2. **Press the key to which you have assigned [Cnt Sht Spd Bst w/ Hold] or [Cnt Sht Spd Bst Toggle], and then shoot the picture.**

Setting item details

30 images/s
20 images/s
15 images/s
10 images/s
5 images/s

Hint

- When [Shutter Type] is set to [Electronic Shutter], you can use [Cnt Shoot Speed Boost] during continuous shooting.
- You can use [Cnt Shoot Speed Boost] while pressing the shutter button halfway down with the following settings.
  – [Shutter Type] is set to [Electronic Shutter], and [Drive Mode] is set to [Cont. Shooting].
  – [Shutter Type] is set to [Mechanical Shutter], [Drive Mode] is set to [Cont. Shooting], and [Anti-flicker Shoot.] is set to [Off].
- When shooting using [Cnt Shoot Speed Boost], the electronic shutter is used.
- If you use [Cnt Shoot Speed Boost] during continuous shooting, the playback group will be divided before and after the continuous shooting speed boost.
- In [Reg. Custom Shoot Set], you can register [Cnt Shoot Speed Boost] instead of the drive mode. In this case, the continuous shooting speed can be set separately from [Cnt Sht Spd Bst Settings].
- By using [Reg. Custom Shoot Set], you can change other shooting settings and execute [Cnt Sht Spd Bst Settings] at the same time.

Note

- If you use [Cnt Shoot Speed Boost] during continuous shooting and switch from a low speed to a high speed (30 images per second) or from a high speed to a low speed (20 images per second or less), continuous shooting may be interrupted at some point.

Related Topic

- Cont. Shooting
- Assigning frequently used functions to buttons and dials (Custom Key/Dial Set.)

TP1002158455

5-069-971-11(6) Copyright 2026 Sony Corporation

Interchangeable Lens Digital Camera
ILCE-7M5 α7V

Pre-Capture Settings

You can start shooting slightly before you press the shutter button when using continuous shooting. The camera starts and keeps shooting still images while the shutter button is pressed halfway down or a custom key is pressed (pre-capture), and images shot from the specified number of seconds before the shutter button was fully pressed are recorded retrospectively.
[Pre-Capture] can only be used when [Shutter Type] is set to [Electronic Shutter] and the drive mode is set to [Cont. Shooting] or when using the [Cnt Shoot Speed Boost] function.

1. **MENU → (Shooting) → [Drive Mode] → [Pre-Capture Settings] → desired setting item.**

Menu item details

Pre-Capture:
Sets whether to use the pre-capture function. ([On]/[Off])

Pre-Capture Rec Time:
Sets the number of seconds to go back when using the pre-capture function. ([0.03 seconds] – [1.0 second])

Pre-Captr. Start Trigger:
Sets the button to execute the pre-capture function. ([Shutter Half Press]/[AF Assign Btn]/[Both Valid])

When [AF Assign Btn] or [Both Valid] is set, the pre-capture function can be executed by pressing the key to which the AF On function has been assigned using [Custom Key/Dial Set.].
If [AF w/ Shutter] is set to [On], pre-capturing will be performed by pressing the shutter button halfway regardless of the setting for [Pre-Captr. Start Trigger]. If you do not want to execute pre-capturing with the shutter button, set as follows.

- MENU → AF/MF (Focus) → [AF/MF] → [AF w/ Shutter] → [Off].
- Set [Pre-Captr. Start Trigger] to [AF Assign Btn].

Hint

- If you use the [Remain Shoot Display] function, the remaining recording capacity display will be a guideline for the pre-capturing state. The remaining recording capacity decreases during pre-capturing and becomes constant after the amount of time set in [Pre-Capture Rec Time] has elapsed. When pre-capturing is stopped, the remaining shooting capacity is restored.
- Images shot during pre-capturing and images shot after pressing the shutter button are in the same group when played back. Images with a (pre-capture) icon displayed on the playback screen are images shot during pre-capturing.

Note

- Even if the [Pre-Capture Rec Time] setting is the same, if the continuous shooting speed is different, the number of recorded images will be different.
- When the continuous shooting speed is set to [30 images/s] and [Pre-Capture] is set to [On], the minimum shutter speed is 1/30 second. When the continuous shooting speed is set to [20 images/s] or slower and [Pre-Capture] is set to [On], the minimum shutter speed is 1/8 second.
- Depending on the combination of continuous shooting speed and image quality settings, you may not be able to record retroactively for the number of seconds set in [Pre-Capture Rec Time].
- During pre-capturing, [Auto Magnifier in MF] cannot be used.

- When the focus mode is AF-C (Continuous AF), even if [Full Time DMF] is set to [On], you cannot focus with the lens focus ring while the pre-capture function is running.
- The pre-capture function cannot be used in the following situations.
  - During focus magnification
- When the continuous shooting speed is high, the temperature of the camera tends to rise. Therefore, depending on the temperature of the shooting environment, pre-capturing may be stopped to protect the camera. In this case, the (pre-capture unavailable) icon will be displayed, indicating that the camera temperature is rising.

Related Topic

- Shutter Type
- Cont. Shooting
- Cnt Shoot Speed Boost
- Remain Shoot Display (still image)
- Selection/Memo Shot

TP1002158456

5-069-971-11(6) Copyright 2026 Sony Corporation

Selection/Memo Shot

When performing continuous shooting or interval shooting, you can automatically set a rating (ranking) for the first shot or automatically insert a divider frame before the first shot.
A different rating can also be set for the first image captured after pressing the shutter button fully down when using [Pre-Capture].

1. **MENU → (Shooting) → [Shooting Option] → [Selection/Memo Shot] → desired setting item.**

Menu item details

Top Image:
Sets whether to automatically set a rating for the first shot or whether to insert a divider frame before the first shot in continuous shooting. ([Off]/[Divider Frame ( )]/[Rating ( )] – [Rating ( )])

Pre-Capture Shutter Rel:
Sets whether to automatically set a rating for the first image captured after pressing the shutter button fully down when using [Pre-Capture]. ([Off]/[Rating ( )] – [Rating ( )])

Related Topic

- Pre-Capture Settings
- Rating
- Setting the method for jumping between images (Image Jump Setting)

TP1002158457

5-069-971-11(6) Copyright 2026 Sony Corporation

Self-timer(Single)

Shoots an image using the self-timer after a designated number of seconds have elapsed since the shutter button was pressed. Use the 5-second/10-second self-timer when you are going to be in the picture, and use the 2-second self-timer to reduce camera-shake caused by pressing the shutter button.

1. **Press / (Drive Mode) of the control wheel → [Self-timer(Single)].**
   - You can also set the drive mode by selecting MENU → (Shooting) → [Drive Mode] → [Drive Mode].
2. **Select the desired mode using the right/left side of the control wheel.**
3. **Adjust the focus and shoot the image.**

   The self-timer lamp flashes, a beep sounds, and a picture is taken after the designated number of seconds have elapsed.

Menu item details

The mode determines the number of seconds until a picture is taken after the shutter button is pressed.

10 Self-timer(Single): 10 sec
5 Self-timer(Single): 5 sec
2 Self-timer(Single): 2 sec

Hint

- Press the shutter button again or press / (Drive Mode) on the control wheel to stop the count of the self-timer.
- Press / (Drive Mode) on the control wheel and select (Single Shooting) to cancel the self-timer.
- Set [Audio Signal(Shooting)] to [Off] to turn off the beeping sound during the self-timer countdown.
- To use the self-timer in the bracket mode, set the drive mode to bracket, then select MENU → (Shooting) → [Drive Mode] → [Bracket Settings] → [Selftimer during Bracket].

Related Topic

- Fn Menu Settings (still image/movie)
- Audio Signal(Shooting)

TP1002110550

5-069-971-11(6) Copyright 2026 Sony Corporation

Self-timer(Cont)

Shoots a designated number of images using the self-timer after a designated number of seconds have elapsed since the shutter button was pressed. You can choose the best from multiple shots.

1. **Press / (Drive Mode) of the control wheel → [Self-timer(Cont)].**
   - You can also set the drive mode by selecting MENU → (Shooting) → [Drive Mode] → [Drive Mode].
2. **Select the desired mode using the right/left side of the control wheel.**
3. **Adjust the focus and shoot the image.**

   The self-timer lamp flashes, a beep sounds, and pictures are taken after the designated number of seconds has elapsed. The designated number of pictures are taken continuously.

Menu item details

For example, three images are shot when 10 seconds have elapsed after the shutter button is pressed when [Self-timer(Cont.): 10 Sec. 3 Img.] is selected.

Self-timer(Cont.): 10 Sec. 3 Img.
Self-timer(Cont.): 10 Sec. 5 Img.
Self-timer(Cont.): 5 Sec. 3 Img.
Self-timer(Cont.): 5 Sec. 5 Img.
Self-timer(Cont.): 2 Sec. 3 Img.
Self-timer(Cont.): 2 Sec. 5 Img.

Hint

- Press the shutter button again or press / (Drive Mode) on the control wheel to stop the count of the self-timer.
- Press / (Drive Mode) on the control wheel and select (Single Shooting) to cancel the self-timer.

Related Topic

- Fn Menu Settings (still image/movie)

TP1002110551

5-069-971-11(6) Copyright 2026 Sony Corporation

Cont. Bracket

Shoots multiple images while automatically shifting the exposure from base to darker and then to lighter. You can select an image that suits your purpose after recording.

1. **Press / (Drive Mode) of the control wheel → [Cont. Bracket].**
   - You can also set the drive mode by selecting MENU → (Shooting) → [Drive Mode] → [Drive Mode].
2. **Using the control wheel, select the desired exposure value and the number of images you want to shoot.**
   - When setting to record two images, you can select whether to adjust the exposure to the + (over) or - (under) side.
   - The [Bracket Settings] menu can be displayed with the right side of the control wheel.
3. **Adjust the focus and shoot the image.**
   - Keep pressing and holding the shutter button until bracket shooting is finished.

Menu item details

Exposure Value:
Sets the amount by which the exposure value is adjusted during bracketing shooting.

Number of Shots:
Sets the number of images to shoot during bracketing shooting.

Hint

- The last shot is shown on the auto review.

Note

- When [ISO AUTO] is selected in [Manual Exposure] mode, the exposure is changed by adjusting the ISO value. If a setting other than [ISO AUTO] is selected, the exposure is changed by adjusting the shutter speed.
- When the exposure is compensated, the exposure is shifted based on the compensated value.
- Bracket shooting is unavailable in the following shooting modes:
  – [Intelligent Auto]
- When the flash is used, the product performs flash bracket shooting, which shifts the amount of flash light even if [Cont. Bracket] is selected. Press the shutter button for each image.

Related Topic

- Bracket Settings
- Indicator during bracket shooting

- Fn Menu Settings (still image/movie)

TP1002110552

5-069-971-11(6) Copyright 2026 Sony Corporation

Single Bracket

Shoots multiple images while automatically shifting the exposure from base to darker and then to lighter. You can select the image that suits your purpose after recording.
Since a single picture is taken each time you press the shutter button, you can adjust the focus or the composition for each shot.

1. **Select / (Drive Mode) of the control wheel → [Single Bracket].**
   - You can also set the drive mode by selecting MENU → (Shooting) → [Drive Mode] → [Drive Mode].
2. **Using the control wheel, select the desired exposure value and the number of images you want to shoot.**
   - When setting to record two images, you can select whether to adjust the exposure to the + (over) or - (under) side.
   - The [Bracket Settings] menu can be displayed with the right side of the control wheel.
3. **Adjust the focus and shoot the image.**
   - Press the shutter button for each image.

Menu item details

Exposure Value:
Sets the amount by which the exposure value is adjusted during bracketing shooting.
Number of Shots:
Sets the number of images to shoot during bracketing shooting.

Note

- When [ISO AUTO] is selected in [Manual Exposure] mode, the exposure is changed by adjusting the ISO value. If a setting other than [ISO AUTO] is selected, the exposure is changed by adjusting the shutter speed.
- When the exposure is compensated, the exposure is shifted based on the compensated value.
- Bracket shooting is unavailable in the following shooting modes:
  – [Intelligent Auto]

Related Topic

- Bracket Settings
- Indicator during bracket shooting
- Fn Menu Settings (still image/movie)

TP1002133979

5-069-971-11(6) Copyright 2026 Sony Corporation

Interchangeable Lens Digital Camera
ILCE-7M5 α7V

Indicator during bracket shooting

Viewfinder

Ambient light* bracketing
3 images shifted by 0.3 EV steps
Exposure compensation ±0.0 EV

Monitor (Display All Info. or Histogram)

Ambient light* bracketing
3 images shifted by 0.3 EV steps
Exposure compensation ±0.0 EV

Flash bracketing
3 images shifted by 0.7 EV steps
Flash compensation -1.0 EV

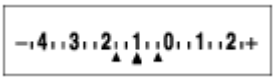

Monitor (For viewfinder)

Ambient light* bracketing (upper indicator)
3 images shifted by 0.3 EV steps
Exposure compensation ±0.0 EV

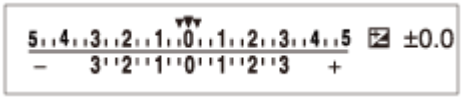

Flash bracketing (lower indicator)
3 images shifted by 0.7 EV steps
Flash compensation -1.0 EV

* Ambient light: A generic term for non-flash light including natural light, electric bulb and fluorescent lighting. Whereas the flash light blinks for a moment, ambient light is constant, so this kind of light is called "ambient light."

Hint

- During bracket shooting, guides equal to the number of images to be shot are displayed over/under the bracket indicator.
- When you start single bracket shooting, the guides will disappear one by one as the camera records images.

TP1002134014

5-069-971-11(6) Copyright 2026 Sony Corporation

Focus Bracket

Performs continuous shooting automatically while shifting the focus position. This function can be used to shoot images for depth-of-field composite images that are in focus at all points (focus stacking), or to select the optimum focus position from among multiple images.

1. **Select / (Drive Mode) on the control wheel → [Focus Bracket].**
   - You can also set the focus bracket by selecting MENU → (Shooting) → [Drive Mode] → [Drive Mode].
2. **Press the right side of the control wheel and set [Step Width] and [Number of Shots].**
   - Step Width: Selects the degree to which the focus is shifted within the range of 1 to 10. The higher the number, the more the focus will shift.
   - Number of Shots: Sets the number of shots taken with one release within the range of 2 to 299 for each position.
3. **Point the cursor at the ones place of the number of shots and press the right side of the control wheel to open [Focus Bracket Settings]. Then select [Focus Bracket Order].**
   - [0→+]: Shifts the focus from the current focus position toward infinity. When the focus reaches infinity, shooting ends even if the set number of shots has not been reached.
   - [0→-→+]: Takes three images in the order of the current focus position, front focus, and rear focus. At this time, the number of shots set in Step 2 becomes invalid.
   - You can also set [Focus Bracket Order] from [Drive Mode] → [Bracket Settings] → [Focus Bracket Settings] → [Focus Bracket Order].
4. **Press down the shutter button to shoot.**

Hint

- The [Step Width] value is a relative value, and the focus interval varies depending on shooting conditions such as the aperture of the lens and the initial focus position. It is recommended that you take a test shot to find the appropriate focus width.
- [Shooting Interval], [Exposure Smoothing], and [Focus Brckt Saving Dest] for the focus bracket can be set from [Bracket Settings].

Note

- If the camera or lens moves while shooting with the focus bracket, focus stacking may not be successful. Use a tripod when shooting for focus stacking.

Related Topic

- Bracket Settings
- Fn Menu Settings (still image/movie)

5-069-971-11(6) Copyright 2026 Sony Corporation

WB bracket

Shoots a total of three images, each with different color tones according to the selected settings for white balance, color temperature and color filter.

1. **Select / (Drive Mode) of the control wheel → [WB bracket].**
   - You can also set the drive mode by selecting MENU → (Shooting) → [Drive Mode] → [Drive Mode].
2. **Select the desired mode using the right/left side of the control wheel.**
3. **Adjust the focus and shoot the image.**

Menu item details

White Balance Bracket: Lo:

Records a series of three images with small changes in the white balance (within the range of $10MK^{-1*}$).

White Balance Bracket: Hi:

Records a series of three images with large changes in the white balance (within the range of $20MK^{-1*}$).

* MK^{-1} is the unit that indicates the capability of color temperature conversion filters and indicates the same value as "mired."

Hint

- The last shot is shown on the auto review.

Related Topic

- Bracket Settings
- Fn Menu Settings (still image/movie)

TP1002134009

5-069-971-11(6) Copyright 2026 Sony Corporation

DRO Bracket

You can record a total of three images, each at a different degree of D-Range Optimizer value.

1. **Select / (Drive Mode) of the control wheel → [DRO Bracket].**
   - You can also set the drive mode by selecting MENU → (Shooting) → [Drive Mode] → [Drive Mode].
2. **Select the desired mode using the right/left side of the control wheel.**
3. **Adjust the focus and shoot the image.**

Menu item details

DRO Bracket: Lo:
Records a series of three images with small changes in the D-Range Optimizer value (Lv 1, Lv 2, and Lv 3).

DRO Bracket: Hi:
Records a series of three images with large changes in the D-Range Optimizer value (Lv 1, Lv 3, and Lv 5).

Hint

- The last shot is shown on the auto review.

Related Topic

- Bracket Settings
- Fn Menu Settings (still image/movie)

TP1002110554

5-069-971-11(6) Copyright 2026 Sony Corporation

Bracket Settings

Sets self-timer shooting, the shooting order for the exposure bracket / white balance bracket, and the shooting method for the focus bracket in the bracket shooting mode.

1. **MENU → (Shooting) → [Drive Mode] → [Bracket Settings] → desired setting.**

Menu item details

Selftimer during Bracket:
Sets whether to use the self-timer during bracket shooting. Also sets the number of seconds until the shutter is released if using the self-timer.
(Off/2 Sec/5 Sec/10 Sec)

Bracket order:
Sets the order of exposure bracketing and white balance bracketing.
(0→-→+/-→0→+)

Focus Bracket Order:
Sets the shooting order for the focus bracket. ([0→+]/[0→-→+])

Exposure Smoothing:
Sets whether to automatically adjust the exposure while shooting with the focus bracket. ([On]/[Off])

Shooting Interval:
Sets the shooting interval when shooting with the focus bracket. ([Shortest]/[1 Sec]/[2 Sec]/[3 Sec]/[5 Sec]/[10 Sec]/[15 sec]/[30 Sec])

Focus Brckt Saving Dest:
Sets the save destination folder for still images taken with the focus bracket. ([Current Folder]/[New Folder])

Note

- When [0→-→+] is selected for [Focus Bracket Order], the number of shots taken with the focus bracket is fixed at three.

Related Topic

- Cont. Bracket
- Single Bracket
- WB bracket
- DRO Bracket
- Focus Bracket

TP1002134446

5-069-971-11(6) Copyright 2026 Sony Corporation

Self-timer (movie)

S&Q

You can start shooting with the self-timer when recording a movie.

1. **Press / (Drive Mode) of the control wheel.**

   The [Self-timer] setting screen will be displayed.

   - You can also set the drive mode by selecting MENU → (Shooting) → [Shooting Option] → [Self-timer].

2. **Select [On] using the control wheel and set the desired countdown time.**

   - Rec Start delay: Sets the count time until the start of movie recording. (3 s/5 s/10 s)
   - Repetition: Sets whether to repeat the movie self-timer. (Repeat/Only Once)
     If you select [Repeat], the movie self-timer will be activated repeatedly even after movie recording is completed.
     If you select [Only Once], the movie self-timer will be canceled after movie recording is completed, and the camera will return to the normal movie recording standby mode.

3. **Adjust the focus and press the MOVIE (movie) button.**

   When the countdown appears on the recording standby screen, the self-timer lamp flashes, a beep sounds, and recording starts after the designated number of seconds has elapsed.

   - Press the MOVIE button again to end recording.

Menu item details

On:
Uses the movie self-timer function.

Off:
Does not use the movie self-timer function.

Hint

- To stop the self-timer countdown, press the MOVIE button again or press the button to which the [Self-timer] function is assigned.

Note

- If you press the MOVIE button in the still image shooting mode to start movie recording, [Self-timer] will not work.

TP1002154664

5-069-971-11(6) Copyright 2026 Sony Corporation

Interval Shoot Func.

You can automatically shoot a series of still images with the shooting interval and number of shots that you set in advance (Interval shooting). You can then create a time-lapse movie from the still images produced by interval shooting using the computer software Imaging Edge Desktop (Viewer).

For details on time-lapse movies, refer to the support page for Imaging Edge Desktop.
https://www.sony.net/disoft/help/

For details on time-lapse movies recorded with this camera, refer to " Shoot Mode (S&Q/time-lapse)" and " Time-lapse Settings ."

1. **MENU → (Shooting) → [Drive Mode] → [Interval Shoot Func.] → [Interval Shooting] → [On].**

2. **MENU → (Shooting) → [Drive Mode] → [Interval Shoot Func.] → Select an item to set, and then select the desired setting.**

3. **Press the shutter button.**

   When the time set for [Shooting Start Time] has elapsed, shooting will start.

   - When the number of shots set for [Number of Shots] is completed, the camera will return to the standby screen for interval shooting.

Menu item details

Interval Shooting:
Sets whether to perform interval shooting. ([Off]/[On])

Shooting Start Time:
Sets the time from when you press the shutter button to when interval shooting starts. (1 second to 99 minutes 59 seconds)

Shooting Interval:
Sets the shooting interval (time from when one exposure starts to when the exposure for the next shot starts). (1 second to 60 seconds)

Number of Shots:
Sets the number of shots for interval shooting. (1 shot to 9 999 shots)

AE Tracking Sensitivity:
Sets the tracking sensitivity of the auto exposure against the change in luminance during interval shooting. If you select [Low], exposure changes during interval shooting will be smoother. ([High]/[Mid]/[Low])

Shutter Type in Interval:
Sets the shutter type during interval shooting. ([Mechanical Shutter]/[Electronic Shutter])

Shoot Interval Priority:
Sets whether or not to prioritize the shooting interval when the exposure mode is [Program Auto] or [Aperture Priority] and the shutter speed becomes longer than the time set for [Shooting Interval]. ([Off]/[On])

Hint

- If you press the shutter button during interval shooting, interval shooting will end and the camera will return to the standby screen for interval shooting.
- To return to the normal shooting mode, set [Interval Shooting] to [Off].
- If you press a key to which one of the following functions has been assigned at the moment when shooting starts, the function will remain active during interval shooting even without you holding down the button.
  - [AEL hold]
  - [AEL hold]
  - [AF/MF Selector Hold]
  - [Regist. AF Area hold]
  - [AWB Lock Hold]
  - FEL Lock hold
  - FEL Lock/AEL hold
- If you set [Display as Group] to [On], still images shot with the interval shooting function will be displayed in groups.
- Still images shot with interval shooting can be played back continuously on the camera. If you intend to create a movie using the still images, you can preview the result.

Note

- You may not be able to record the set number of images depending on the remaining battery level and the amount of free space on the recording medium. Supply power via USB while shooting, and use a memory card with sufficient space.
- When the shooting interval is short, the camera may get hot easily. Depending on the ambient temperature, you may not be able to record the set number of images because the camera may stop recording to protect the equipment.
- During interval shooting (including the time between pressing the shutter button and the start of shooting), you cannot operate the dedicated shooting setting screen or MENU screen. However, you can adjust some settings such as the shutter speed with using the customized dial or control wheel.
- During interval shooting, auto review is not displayed.
- [Shutter Type in Interval] is set to [Electronic Shutter] as a default, regardless of the setting for [Shutter Type].
- Interval shooting is unavailable in the following situations:
  - The shooting mode is set to [Intelligent Auto]
  - [NR Shooting] is set to [On]
  - [Shooting for HDR] is set to [On]

Related Topic

- Cont. Play for Interval
- Using the camera with power supplied via USB

TP1002149653

5-069-971-11(6) Copyright 2026 Sony Corporation

NR Shooting Settings

S&Q

You can create low-noise images that cannot be achieved with normal shooting by continuously shooting 4 to 16 RAW images and then combining them on a computer. To combine multiple RAW images, dedicated software is needed.

1. **MENU → (Shooting) → [Composite RAW Sht.] → [NR Shooting Settings] → [NR Shooting] → [On].**
2. **MENU → (Shooting) → [Composite RAW Sht.] → [NR Shooting Settings] → Select an item to set, and then select the desired setting.**
3. **Press the shutter button.**

   The specified number of RAW images will be shot continuously.

Menu item details

NR Shooting:
Sets whether to perform noise reduction shooting. ([On]/[Off])

RAW File Type:
Sets the file format of RAW images recorded with noise reduction shooting. ([Lossless Comp]/[Compressed(HQ)]/[Compressed])

Number of Shots:
Sets the number of images shot with noise reduction shooting. ([4 shots]/[8 shots]/[16 shots])

Hint

- You can import the recorded RAW images to a computer and combine them using Imaging Edge Desktop (Viewer).
- You can also perform [NR Shooting] using Imaging Edge Desktop (Remote).
- For details on how to use Imaging Edge Desktop, refer to the following support site.
  https://www.sony.net/dics/crsnr/

Note

- RAW images recorded with [NR Shooting] cannot be combined using the camera. Use Imaging Edge Desktop (Viewer) to combine the images.
- The number of RAW images set in [Number of Shots] will be recorded with the same settings.
- When using [NR Shooting], the settings are locked as follows.
  - [File Format] under [Image Quality Settings]: [RAW]
  - [RAW File Type] under [Image Quality Settings]: the file type set in [RAW File Type] under [NR Shooting Settings]
  - [Flash Mode]: [Flash Off]
- The focus is locked to the position in the first shot.
- When the internal memory for buffering does not have enough space for the number of images set in [Number of Shots], shooting cannot be started. To confirm the remaining capacity of the memory for buffering, use [Remain Shoot Display].

- Bulb shooting cannot be performed when using [NR Shooting].
- The shutter speed cannot be set slower than 1/30 second when using [NR Shooting].
- If the shooting mode is set to a mode other than P/A/S/M, you cannot perform [NR Shooting].

TP1002158458

5-069-971-11(6) Copyright 2026 Sony Corporation

Shooting for HDR Set

You can create images with a high dynamic range that cannot be achieved with normal shooting by continuously shooting 4 to 16 RAW images and then combining them on a computer. To combine multiple RAW images, dedicated software is needed.

1. **MENU → (Shooting) → [Composite RAW Sht.] → [Shooting for HDR Set] → [Shooting for HDR] → [On].**

   The [Shooting for HDR] setting screen will be displayed.

2. **Press the right side of the control wheel and set [D-Range], [Exposure Comp.], and [Number of Shots].**

   - D-Range: Sets the ratio for expanding the dynamic range. ([AUTO]/[Level 1]/[Level 2]/[Level 3])
   - Exposure Comp.: Sets the brightness of the image.
   - Number of Shots: Sets the number of images shot for HDR. ([4 shots]/[8 shots]/[16 shots])

3. **Go back to the shooting standby screen and then adjust the focus and press the shutter button.**

   The specified number of RAW images with different brightness levels will be shot continuously.

Menu item details

Shooting for HDR:
Sets whether to perform shooting for HDR. ([On]/[Off])

RAW File Type:
Sets the file format of RAW images recorded with HDR shooting. ([Lossless Comp]/[Compressed(HQ)]/[Compressed])

Hint

- Each time you press the Fn (Function) button on the [Shooting for HDR] settings screen, the previewed image switches in the order of “current exposure → exposure for plus side → exposure for minus side.” However, the exposure range visible on the preview screen is -3.0EV to +3.0EV for the combined exposure of [Exposure Comp.] and [D-Range]. If you set values outside this range, the brightness will not be reflected on the preview screen but will be reflected in the recorded image.
- All the setting items can be hidden by pressing the right side of the control wheel while the cursor is over [Number of Shots] on the [Shooting for HDR] setting screen, making it easier to check the image.
- You can import the recorded RAW images to a computer and combine them using Imaging Edge Desktop (Viewer).
- You can also perform [Shooting for HDR] using Imaging Edge Desktop (Remote).
- For details on how to use Imaging Edge Desktop, refer to the following support site.
  https://www.sony.net/dics/crshdr/

Note

- RAW images recorded with [Shooting for HDR] cannot be combined using the camera. Use Imaging Edge Desktop (Viewer) to combine the images.
- When using [Shooting for HDR], the settings are locked as follows.
  – [File Format] under [Image Quality Settings]: [RAW]

- [RAW File Type] under [Image Quality Settings]: the file type set in [RAW File Type] under [Shooting for HDR Set]
- [Flash Mode]: [Flash Off]

- The focus is locked to the position in the first shot.
- Depending on the shooting settings, it may not be possible to shoot with the level of dynamic range specified in [D-Range].
- When the internal memory for buffering does not have enough space for the number of images set in [Number of Shots], shooting cannot be started. To confirm the remaining capacity of the memory for buffering, use [Remain Shoot Display].
- Bulb shooting cannot be performed when using [Shooting for HDR].
- The shutter speed cannot be set slower than 1/30 second when using [Shooting for HDR].
- If the shooting mode is set to a mode other than P/A/S/M, you cannot perform [Shooting for HDR].

TP1002161096

5-069-971-11(6) Copyright 2026 Sony Corporation

JPEG/HEIF Switch

Switches the file format (JPEG / HEIF) of the still image to be recorded.
The JPEG format has general compatibility. You can view and edit JPEG files in various environments. The HEIF format has high compression efficiency. The camera can record with high image quality and small file sizes in the HEIF format. Depending on the computer or software, you may not be able to view or edit HEIF files. In addition, a HEIF-compatible environment is required to play back still images in the HEIF format. You can enjoy high-quality still images by connecting the camera and the TV via HDMI.

1. **MENU → (Shooting) → [Image Quality/Rec] → [JPEG/HEIF Switch] → desired setting.**

Menu item details

JPEG:
Performs digital processing on the RAW file and records it in the JPEG format. This setting gives priority to compatibility.

HEIF(4:2:0):
Performs digital processing on the RAW file and records it in the HEIF (4:2:0) format. This setting gives priority to image quality and compression efficiency.

HEIF(4:2:2):
Performs digital processing on the RAW file and records it in the HEIF (4:2:2) format. This setting gives priority to image quality.

Hint

- The HEIF format allows you to record images with rich 10-bit gradation expression. Also, by setting [HEIF(4:2:2)], you can record with 4:2:2 color sampling, which has better color reproduction.
- Depending on the setting for [JPEG/HEIF Switch], items related to the file format ([File Format], etc.) will switch to JPEG or HEIF.

Note

- HEIF image files recorded with this camera cannot be displayed on other cameras that do not support the HEIF file format. Be careful not to accidentally erase HEIF image files by formatting the memory card or deleting the files.
- When recording in the HEIF format with [HLG Still Image] set to [Off], the color space is recorded in sRGB. When [HLG Still Image] is set to [On], it is recorded in the BT.2100 color space (BT.2020 color gamut).

Related Topic

- Image Quality Settings: File Format (still image)
- HLG Still Image

TP1002151159

5-069-971-11(6) Copyright 2026 Sony Corporation

Image Quality Settings: File Format (still image)

Sets the file format for still images.

1. **MENU → (Shooting) → [Image Quality/Rec] → [Image Quality Settings] → [File Format] → desired setting.**

Menu item details

RAW:
Digital processing is not performed on this file format. Select this format to process images on a computer for professional purposes.

RAW & JPEG/RAW & HEIF:
A RAW image and a JPEG or HEIF image are created at the same time. This is suitable when you need two image files, a JPEG or HEIF for viewing, and a RAW for editing.

JPEG/HEIF:
The image is recorded in the JPEG or HEIF format.

- When [Recording Media] is set to [Sort Recording], you can select the file format for each slot from among RAW and JPEG, or RAW and HEIF.

About RAW images

- To open a RAW image file recorded with this camera, the software Imaging Edge Desktop is needed. With Imaging Edge Desktop, you can open a RAW image file, then convert it into a popular image format such as JPEG or TIFF, or readjust the white balance, saturation or contrast of the image.
- RAW images recorded with this camera have a resolution of 14 bits per pixel.

Note

- If you do not intend to edit the images on your computer, we recommend that you record in JPEG or HEIF format.
- An environment supporting the HEIF format is required to play back HEIF images.

Related Topic

- JPEG/HEIF Switch
- Image Quality Settings: JPEG Quality/HEIF Quality
- Image Quality Settings: JPEG Image Size/HEIF Image Size
- Image Quality Settings: RAW File Type
- Rec. Media Settings (still image/movie): Recording Media (still image)
- Introduction to desktop application (Imaging Edge Desktop/Catalyst)

5-069-971-11(6) Copyright 2026 Sony Corporation

Image Quality Settings: RAW File Type

Selects the file type for RAW images.

1. **MENU → (Shooting) → [Image Quality/Rec] → [Image Quality Settings] → [RAW File Type] → desired setting.**

Menu item details

Lossless Comp:
Records images with a lossless compression method that causes no deterioration in image quality and has a high compression rate.

Compressed(HQ):
Records images in compressed RAW format. Images can be recorded in a higher image quality than when shooting with [Compressed].

Compressed:
Records images in compressed RAW format. Continuous shooting can continue for a longer period of time than when shooting with [Compressed(HQ)].

Hint

- The [RAW File Type] icons are displayed as shown below.
  - Lossless Comp: RAW
  - Compressed(HQ): RAW HQ
  - Compressed: RAW
- The aspect ratio for RAW images is always 3:2. JPEG/HEIF images are recorded with the aspect ratio set in [Aspect Ratio] when RAW images and JPEG/HEIF images are recorded at the same time.
- The image size for RAW images corresponds to the “L” size for JPEG images in full-frame shooting and to the “M” size in APS-C size shooting.

Note

- You cannot record RAW images with different formats to Slot 1 and Slot 2. Even when [Recording Media] is set to [Sort Recording], each slot has the same setting for [RAW File Type].

Related Topic

- Image Quality Settings: File Format (still image)
- Image Quality Settings: JPEG Image Size/HEIF Image Size
- Rec. Media Settings (still image/movie): Recording Media (still image)

TP1002161104

5-069-971-11(6) Copyright 2026 Sony Corporation

Image Quality Settings: JPEG Quality/HEIF Quality

Selects the image quality when recording JPEG or HEIF images.

1. **MENU → (Shooting) → [Image Quality/Rec] → [Image Quality Settings] → [JPEG Quality]/[HEIF Quality] → desired setting.**

Menu item details

Extra fine/Fine/Standard/Light:
Since the compression rate increases from [Extra fine] to [Fine] to [Standard] to [Light], the file size decreases in that same order. This allows more files to be recorded on one memory card, but the image quality is lower.

- When [Recording Media] is set to [Sort Recording], you can select the image quality for each slot.

Related Topic

- Image Quality Settings: File Format (still image)
- Rec. Media Settings (still image/movie): Recording Media (still image)

TP1002152712

5-069-971-11(6) Copyright 2026 Sony Corporation

Image Quality Settings: JPEG Image Size/HEIF Image Size

The larger the image size, the more detail will be reproduced when the image is printed on large-format paper. The smaller the image size, the more images can be recorded.

1. **MENU → (Shooting) → [Image Quality/Rec] → [Image Quality Settings] → [JPEG Image Size]/[HEIF Image Size] → desired setting.**

Menu item details

When [Aspect Ratio] is set to 3:2

Setting values	Pixel number (horizontal×vertical)
L:33M	7008×4672 pixels
M:14M	4608×3072 pixels
S:8.2M	3504×2336 pixels

When [Aspect Ratio] is set to 4:3

Setting values	Pixel number (horizontal×vertical)
L:29M	6224×4672 pixels
M:13M	4096×3072 pixels
S:7.3M	3120×2336 pixels

When [Aspect Ratio] is set to 16:9

Setting values	Pixel number (horizontal×vertical)
L:28M	7008×3944 pixels
M:12M	4608×2592 pixels
S:6.9M	3504×1968 pixels

When [Aspect Ratio] is set to 1:1

Setting values	Pixel number (horizontal×vertical)
L:22M	4672×4672 pixels
M:9.4M	3072×3072 pixels
S:5.5M	2336×2336 pixels

Hint

- When recording in the M or S size, the pixel number will not change even if you switch the angle of view between the full-frame size and APS-C size.

Note

- The L size cannot be selected when shooting in the APS-C size. If you shoot in the APS-C size while the L size is selected, the image size will switch to the M size temporarily.

Related Topic

- Image Quality Settings: File Format (still image)
- Aspect Ratio

TP1002152713

5-069-971-11(6) Copyright 2026 Sony Corporation

Aspect Ratio

1 **MENU → (Shooting) → [Image Quality/Rec] → [Aspect Ratio] → desired setting.**

Menu item details

3:2:
Same aspect ratio as 35 mm film

4:3:
The aspect ratio is 4:3.

16:9:
The aspect ratio is 16:9.

1:1:
The aspect ratio is 1:1.

Related Topic

- Marker Display (still image)

TP1002133989

5-069-971-11(6) Copyright 2026 Sony Corporation

HLG Still Image

By using gamma characteristics equivalent to HLG (Hybrid Log-Gamma: standard for HDR images), you can shoot still images with a wide dynamic range and a wide color gamut compatible with BT.2020.
[HLG Still Image] can only be set when shooting in the HEIF format. Set [JPEG/HEIF Switch] to [HEIF(4:2:0)] or [HEIF(4:2:2)], and [File Format] under [Image Quality Settings] to [HEIF] beforehand.

1. **MENU → (Shooting) → [Image Quality/Rec] → [HLG Still Image] → desired setting.**

Menu item details

On:
Shoots HLG still images.
Off:
Shoots normal still images.

Hint

- You can reproduce a wider range of brightness by playing back HLG still images on an HLG-compatible TV or monitor.
- You can display HLG still images on the camera's monitor in almost the same quality as when they are displayed on an HLG-(BT.2020-) compatible monitor by setting as follows.
  - [Gamma Display Assist]: [On]
  - [Gamma Disp. Assist Typ.]: [Auto] or [HLG(BT.2020)]

Note

- In the following situations, [HLG Still Image] is fixed to [Off]:
  - [JPEG/HEIF Switch] is set to [JPEG]
  - [File Format] under [Image Quality Settings] is set to [RAW] or [RAW & HEIF]
  - When a shooting mode other than P / A / S / M is set during still image shooting
  - When the ISO sensitivity is temporarily activated by the [Reg. Custom Shoot Set] function
  - When the [DRO Bracket] function under [Drive Mode] is temporarily activated by the [Reg. Custom Shoot Set] function
- When [HLG Still Image] is set to [On], the following functions are not available.
  - [D-Range Optimizer]
  - [Creative Look]
  - [DRO Bracket] under [Drive Mode]
  - [Picture Profile]
- When [HLG Still Image] is set to [On], the available ISO range changes.

Related Topic

- JPEG/HEIF Switch
- HDMI Resolution
- Gamma Display Assist

5-069-971-11(6) Copyright 2026 Sony Corporation

Color Space

The way colors are represented using combinations of numbers or the range of color reproduction is called “color space.” You can change the color space depending on the purpose of the image.

1. **MENU → (Shooting) → [Image Quality/Rec] → [Color Space] → desired setting.**

Menu item details

sRGB:
This is the standard color space of the digital camera. Use [sRGB] in normal shooting, such as when you intend to print out the images without any modification.

AdobeRGB:
This color space has a wide range of color reproduction. When a large part of the subject is vivid green or red, Adobe RGB is effective. The file name of the recorded image starts with “_.”

Note

- The [Color Space] setting is invalid when shooting images in the HEIF format. If [HLG Still Image] is set to [Off], images will be recorded with the sRGB color space. When [HLG Still Image] is set to [On], it is recorded in the BT.2100 color space (BT.2020 color gamut).
- [AdobeRGB] is for applications or printers that support color management and DCF2.0 option color space. Images may not be printed or viewed in the correct colors if you use applications or printers that do not support Adobe RGB.
- When displaying images that were recorded with [AdobeRGB] on non-Adobe RGB-compliant devices, the images will be displayed with low saturation.

Related Topic

- JPEG/HEIF Switch
- HLG Still Image

TP1002110594

5-069-971-11(6) Copyright 2026 Sony Corporation

File Format (movie)

S&Q

Selects the movie file format.

1 **MENU → / (Shooting) → [Image Quality/Rec] → [File Format] → desired setting.**

Menu item details

File Format	Characteristics
XAVC HS 4K	Records 4K movies in the XAVC HS format. The XAVC HS format uses the HEVC codec, which has high compression efficiency. The camera can record movies with higher image quality than XAVC S movies but the same data volume. Long GOP compression is used for movies.
XAVC S 4K	Records movies in 4K resolution (3840×2160). Long GOP compression is used for movies.
XAVC S HD	Records movies in HD resolution (1920×1080). Long GOP compression is used for movies.
XAVC S-I 4K	Records movies in the XAVC S-I format. The XAVC S-I format uses Intra compression for movies. This format is more suitable for editing than Long GOP compression.
XAVC S-I HD	Records movies in the XAVC S-I format. The XAVC S-I format uses Intra compression for movies. This format is more suitable for editing than Long GOP compression.

- Intra/Long GOP is a movie compression format. Intra compresses the movie by frame, and Long GOP compresses multiple frames. Intra compression has better response and flexibility when editing, but Long GOP compression has better compression efficiency.

Note

- To play back XAVC HS 4K movies on a smartphone or computer, you need a device or software with high processing capability that supports the HEVC codec.
- [APS-C S35 Shooting] is locked to [On] when shooting movies in 4K 120p/100p or shooting slow-motion/quick-motion movies in 240fps/200fps.

Related Topic

- Memory cards that can be used

5-069-971-11(6) Copyright 2026 Sony Corporation

Movie Settings (movie)

Sets the frame rate, bit rate, color information, etc.

1. **MENU → / (Shooting) → [Image Quality/Rec] → [Movie Settings] → [Rec Frame Rate] → desired setting.**

2. **MENU → / (Shooting) → [Image Quality/Rec] → [Movie Settings] → [Record Setting] → desired setting.**

   Example of setting values

   200M 4:2:2 10bit
   (A) (B) (C)

   (A): Bit rate
   (B): Color sampling
   (C): Bit depth

   - The higher the bit rate, the higher the image quality.
   - Color sampling (4:2:2, 4:2:0) is the recording ratio of color information. The more uniform this ratio is, the better the color reproducibility, and it is possible to remove colors neatly even when compositing using a green screen.
   - Bit depth represents the gradation of luminance information. When the bit depth is 8 bits, 256 levels of gradation can be obtained. When the bit depth is 10 bits, 1024 levels of gradation can be obtained. A larger value enables smoother expression from dark to bright areas.
   - [4:2:2 10 bit] is a setting that assumes that the recorded movie will be edited on a computer. The playback environment for [4:2:2 10 bit] is limited.

Menu item details

When [File Format] is set to [XAVC HS 4K]

Rec Frame Rate	Record Setting	Size	Movie compression format
60p/50p	200M 4:2:2 10bit	3840×2160	Long GOP
60p/50p	150M 4:2:0 10bit	3840×2160	Long GOP
60p/50p	100M 4:2:2 10bit	3840×2160	Long GOP
60p/50p	75M 4:2:0 10bit	3840×2160	Long GOP
60p/50p	45M 4:2:0 10bit	3840×2160	Long GOP
24p*	100M 4:2:2 10bit	3840×2160	Long GOP
24p*	100M 4:2:0 10bit	3840×2160	Long GOP

Rec Frame Rate	Record Setting	Size	Movie compression format
24p*	50M 4:2:2 10bit	3840×2160	Long GOP
24p*	50M 4:2:0 10bit	3840×2160	Long GOP
24p*	30M 4:2:0 10bit	3840×2160	Long GOP
120p/100p	280M 4:2:2 10bit	3840×2160	Long GOP
120p/100p	200M 4:2:0 10bit	3840×2160	Long GOP

* Only when [NTSC/PAL Selector] is set to NTSC.

When [File Format] is set to [XAVC S 4K]

Rec Frame Rate	Record Setting	Size	Movie compression format
60p/50p	200M 4:2:2 10bit	3840×2160	Long GOP
60p/50p	150M 4:2:0 8bit	3840×2160	Long GOP
30p/25p	140M 4:2:2 10bit	3840×2160	Long GOP
30p/25p	100M 4:2:0 8bit	3840×2160	Long GOP
30p/25p	60M 4:2:0 8bit	3840×2160	Long GOP
24p*	100M 4:2:2 10bit	3840×2160	Long GOP
24p*	100M 4:2:0 8bit	3840×2160	Long GOP
24p*	60M 4:2:0 8bit	3840×2160	Long GOP
120p/100p	280M 4:2:2 10bit	3840×2160	Long GOP
120p/100p	200M 4:2:0 8bit	3840×2160	Long GOP

* Only when [NTSC/PAL Selector] is set to NTSC.

When [File Format] is set to [XAVC S HD]

Rec Frame Rate	Record Setting	Size	Movie compression format
60p/50p	50M 4:2:2 10bit	1920×1080	Long GOP
60p/50p	50M 4:2:0 8bit	1920×1080	Long GOP
60p/50p	25M 4:2:0 8bit	1920×1080	Long GOP
30p/25p	50M 4:2:2 10bit	1920×1080	Long GOP
30p/25p	50M 4:2:0 8bit	1920×1080	Long GOP
30p/25p	16M 4:2:0 8bit	1920×1080	Long GOP
24p*	50M 4:2:2 10bit	1920×1080	Long GOP
24p*	50M 4:2:0 8bit	1920×1080	Long GOP

Rec Frame Rate	Record Setting	Size	Movie compression format
120p/100p	100M 4:2:0 8bit	1920×1080	Long GOP
120p/100p	60M 4:2:0 8bit	1920×1080	Long GOP

* Only when [NTSC/PAL Selector] is set to NTSC.

When [File Format] is set to [XAVC S-I 4K]

Rec Frame Rate	Record Setting	Size	Movie compression format
60p/50p	600M 4:2:2 10bit/500M 4:2:2 10bit	3840×2160	Intra
30p/25p	300M 4:2:2 10bit/250M 4:2:2 10bit	3840×2160	Intra
24p*	240M 4:2:2 10bit	3840×2160	Intra

* Only when [NTSC/PAL Selector] is set to NTSC.

When [File Format] is set to [XAVC S-I HD]

Rec Frame Rate	Record Setting	Size	Movie compression format
60p/50p	222M 4:2:2 10bit/185M 4:2:2 10bit	1920×1080	Intra
30p/25p	111M 4:2:2 10bit/93M 4:2:2 10bit	1920×1080	Intra
24p*	89M 4:2:2 10bit	1920×1080	Intra

* Only when [NTSC/PAL Selector] is set to NTSC.

Note

- Recording frame rates are indicated as the closest integer values. The actual corresponding frame rates are as follows: 24p: 23.98 fps, 30p: 29.97 fps, 60p: 59.94 fps, and 120p: 119.88 fps.

Related Topic

- File Format (movie)

TP1002134025

5-069-971-11(6) Copyright 2026 Sony Corporation

S&Q Settings

You can record a moment that cannot be captured by the naked eye (slow-motion recording), or record a long-term phenomenon into a compressed movie (quick-motion recording). For example, you can record an intense sports scene, the moment when a bird starts to fly, a blooming flower, and a changing view of clouds or a starry sky. Sound will not be recorded.

1. **Set the Still/Movie/S&Q dial to S&Q (S&Q Motion).**
2. **Select [S&Q Motion] on the [S&Q Shoot Mode] screen.**
   - The [S&Q Shoot Mode] screen is not displayed when [Shoot Mode Sel. Screen] is set to [Not Displayed]. Select MENU → (Shooting) → [Shooting Mode] → [S&Q Shoot Mode], and then select [S&Q Motion].
3. **Use the mode dial to select the desired shooting mode.**
4. **Select MENU → (Shooting) → [Image Quality/Rec] → [S&Q S&Q Settings] → Select an item to set, and then select the desired setting.**
5. **Press the MOVIE (movie) button to start recording.**
   - Press the MOVIE button again to stop recording.

Menu item details

S&Q Frame Rate Settings:
Selects the frame rate of the movie and the shooting frame rate.

S&Q Record Setting:
Selects the bit rate, color sampling, and bit depth of the movie.

- The [S&Q Rec Frame Rate] that can be set for [S&Q Frame Rate Settings] and the values that can be set for [S&Q Record Setting] are the same as the setting values for [Movie Settings].
- The format of the recorded movie will be the same as the [File Format] setting.

Playback speed

The playback speed will vary as below depending on the value set for [S&Q Frame Rate Settings].

When [NTSC/PAL Selector] is set to NTSC

S&Q Frame Rate	S&Q Rec Frame Rate: 24p	S&Q Rec Frame Rate: 30p	S&Q Rec Frame Rate: 60p	S&Q Rec Frame Rate: 120p
240fps	10 times slower	8 times slower	4 times slower	2 times slower
120fps	5 times slower	4 times slower	2 times slower	Normal playback speed
60fps	2.5 times slower	2 times slower	Normal playback speed	2 times quick
30fps	1.25 times slower	Normal playback speed	2 times quick	4 times quick
15fps	1.6 times quick	2 times quick	4 times quick	8 times quick
8fps	3 times quick	3.75 times quick	7.5 times quick	15 times quick
4fps	6 times quick	7.5 times quick	15 times quick	30 times quick
2fps	12 times quick	15 times quick	30 times quick	60 times quick
1fps	24 times quick	30 times quick	60 times quick	120 times quick

When [NTSC/PAL Selector] is set to PAL

S&Q Frame Rate	S&Q Rec Frame Rate: 25p	S&Q Rec Frame Rate: 50p	S&Q Rec Frame Rate: 100p
200fps	8 times slower	4 times slower	2 times slower
100fps	4 times slower	2 times slower	Normal playback speed
50fps	2 times slower	Normal playback speed	2 times quick
25fps	Normal playback speed	2 times quick	4 times quick
12fps	2.08 times quick	4.16 times quick	8.33 times quick
6fps	4.16 times quick	8.33 times quick	16.66 times quick
3fps	8.33 times quick	16.66 times quick	33.33 times quick
2fps	12.5 times quick	25 times quick	50 times quick
1fps	25 times quick	50 times quick	100 times quick

- [240fps]/[200fps] cannot be selected when [File Format] is set to following items:
  - XAVC HS 4K
  - XAVC S 4K
  - XAVC S-I 4K

Hint

- For an estimation of recordable time, refer to “Recordable movie times.”

Note

- In slow-motion/quick-motion recording, the actual shooting time differs from the time recorded in the movie. The recordable time displayed toward the top of the monitor shows the remaining recording time for the movie, not the remaining recording time on the

memory card.

- In slow-motion recording, the shutter speed becomes faster and you may not be able to obtain the proper exposure. If this happens, decrease the aperture value or set the ISO sensitivity to a higher value.
- During slow-motion/quick-motion recording, the following functions are not available.
  - [Time Code Run] under [TC/UB]
  - [Time Code Output] under [HDMI Output Settings]

Related Topic

- Recordable movie times
- Memory cards that can be used

TP1002142790

5-069-971-11(6) Copyright 2026 Sony Corporation

Time-lapse Settings

You can record movies by condensing changes over a period of time of up to several dozen minutes. Unlike quick-motion movie recording, you can set a shooting interval longer than 1 second. This enables you to record movies with a larger time compression ratio. Sound will not be recorded. When creating longer time-lapse movies, use the " Interval Shoot Func. ."

Configure settings such as the recording frame rate and shooting interval in [Time-lapse Settings].
When shooting a time-lapse movie, set the Still/Movie/S&Q dial to S&Q, and set MENU → (Shooting) → [Shooting Mode] → [S&Q Shoot Mode] to [Time-lapse].

1. **MENU → (Shooting) → [Image Quality/Rec] → [Time-lapse Settings] → Select an item to set, and then select the desired setting.**

Menu item details

Frame Rate Settings:
Sets the recording frame rate and shooting interval.
Rec Frame Rate: Sets the recording frame rate for a time-lapse movie. (60p/50p/30p*/25p*/24p)
* [30p]/[25p] cannot be selected when [File Format] is set to [XAVC HS 4K].
Interval Time: Sets the shooting interval for a time-lapse movie. (1 to 60 seconds)

- For the first 10 seconds, the interval can be set in units of 1 second. For the 10th to 60th second, the interval can be set in units of 10 seconds.
- When the file format is set to 4K, you cannot select a value of 6 seconds or longer.
- The interval time is the interval from the start of exposure to the start of the next exposure, regardless of shutter speed.

Record Setting:
Selects the bit rate, color sampling, and bit depth of the movie.

Video Light Setting:
When a video light (sold separately) is attached, you can turn the video light on before each frame for the time-lapse movie is recorded. Sets how many seconds before the light turns on. (Off/2 Sec/5 Sec/10 Sec)

About the recordable time

Approximate times for continuous shooting in the time-lapse shooting mode are as follows. (When [Auto Power OFF Temp.] is set to [High] and the ambient temperature is 25°C (77°F))
When [File Format] is set to HD: approx. 120 minutes
When [File Format] is set to 4K: approx. 120 minutes
HD: XAVC S HD (60p 50M/50p 50M 4:2:0 8bit, when the camera is not connected via Wi-Fi; when the monitor is open)
4K: XAVC S 4K (60p 150M/50p 150M 4:2:0 8bit, when the camera is not connected via Wi-Fi; when the monitor is open)

Using a video light

When a video light is attached in the time-lapse shooting mode, the video light will turn on before recording starts in order to control the light correctly from the first frame.

After recording starts, the video light will turn on/off repeatedly in conjunction with shooting/standby for each frame.

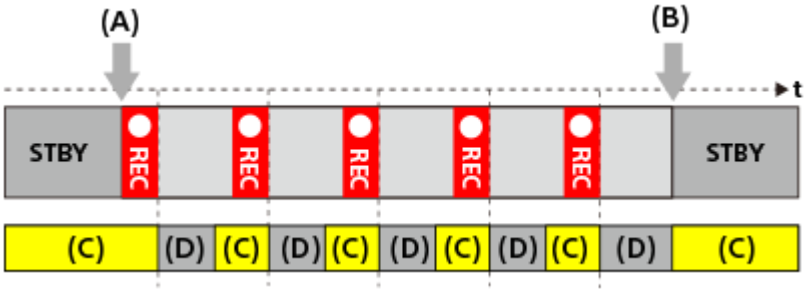

(A) Start of recording
(B) End of recording
(C) Video light on (At the start of recording, the video light turns on earlier than the number of seconds set in [Video Light Setting])
(D) Video light off (The video light remains dimly lit when [Video Light Mode] is set to [REC Link&STBY])

In the following cases, however, the video light will remain lit even during shooting standby:

- When [Video Light Setting] is set to [Off].
- When the time from the end of the frame shooting to the start of the next lighting is 5 seconds or less according to the settings for [Interval Time] and [Video Light Setting].

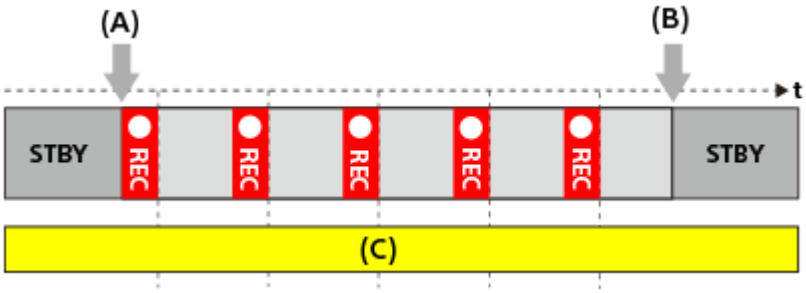

(A) Start of recording
(B) End of recording
(C) Video light on

Hint

- When [Video Light Mode] is set to [Power Link], the video light turns on/off in conjunction with the power, regardless of the [Video Light Setting] setting.
- To enable interval operation with [Video Light Setting], set [Video Light Mode] to [REC Link] or [REC Link&STBY].
- When you shoot a long time-lapse movie, it is recommended that you use an external power supply for the camera.
- When [Auto Power OFF Temp.] is set to [High], the camera can continue movie recording even when the temperature of the camera becomes high.
- At the end of the time-lapse movie, a normal-speed movie may be recorded for about 1 second.

Related Topic

- Interval Shoot Func.
- Shoot Mode (S&Q/time-lapse)
- Video Light Mode

TP1002157000

5-069-971-11(6) Copyright 2026 Sony Corporation

Interchangeable Lens Digital Camera
ILCE-7M5 α7V

4K angle of view Priority

S&Q

Sets whether to widen the angle of view by disabling part of the noise reduction processing when shooting movies in 4K.

1. **MENU → (Shooting) → [Image Quality/Rec] → [4K angle of view Priority] → desired setting.**

Menu item details

On:
Prioritizes the recorded angle of view. Part of the noise reduction processing is disabled.

Off:
Prioritizes the noise reduction processing. The recorded angle of view is narrowed.

Note

- When [4K angle of view Priority] is set to [On], noise may become noticeable, especially when the subject is dark.

TP1002161097

5-069-971-11(6) Copyright 2026 Sony Corporation

Proxy Settings

S&Q

You can simultaneously record a low-bit-rate proxy movie while recording a movie, slow-motion/quick-motion movie, or time-lapse movie.
Since proxy movies are small in file size, they are suitable for transferring to smartphones or uploading to websites.

1. **MENU → (Shooting) → [Image Quality/Rec] → [Px Proxy Settings] → Select an item to set, and then select the desired setting.**

Menu item details

Px Proxy Recording:
Selects whether to simultaneously record proxy movies. ([On] / [Off])

Px Proxy File Format:
Selects the recording format of the proxy movie. ([XAVC HS HD] / [XAVC S HD])

Px Proxy Rec. Settings:
Selects the bit rate, color sampling and bit depth of the proxy movie. ([16M 4:2:0 10bit] / [9M 4:2:0 10bit] / [6M 4:2:0 8bit])

Selectable proxy recording settings

Px Proxy File Format	Recording size	Recording frame rate	Px Proxy Rec. Settings	Compression codec
XAVC HS HD	1920×1080	Max. 60p/Max. 50p	16Mbps 4:2:0 10bit 9Mbps 4:2:0 10bit	MPEG-H HEVC/H.265
XAVC S HD	1280×720	Max. 60p/Max. 50p	6Mbps 4:2:0 8bit	MPEG-4 AVC/H.264

Hint

- Proxy movies are not displayed on the playback screen (single-image playback screen or image index screen). Px (proxy) is displayed over movies for which a proxy movie was simultaneously recorded.

Note

- Proxy movies cannot be played back on this camera.
- Proxy recording is not available in the following situations.
  Normal movie recording

  – [Rec Frame Rate] is set to [120p]/[100p]

  Slow-motion recording/quick-motion recording

  – The recording frame rate is set to [120p]/[100p]

- The frame rate is set to [120fps]/[100fps] or higher

- Deleting/protecting movies that have proxy movies removes/protects both the original and proxy movies. You cannot delete/protect only original movies or proxy movies.
- Movies cannot be edited on this camera.

Related Topic

- Memory cards that can be used

TP1002148265

5-069-971-11(6) Copyright 2026 Sony Corporation

APS-C S35 (Super 35mm) Shooting (still image/movie)

Sets whether or not to record with the angle of view of APS-C for still images and with an angle of view equivalent to Super 35mm for movies. If you select [On] or [Auto], you can use an APS-C size dedicated lens on this product.

1. **MENU → / (Shooting) → [Image Quality/Rec] → [APS-C S35 Shooting] → desired setting.**

Menu item details

On:
Records in either APS-C-equivalent size or Super 35mm-equivalent size.
When [On] is selected, the angle of view becomes approximately 1.5 times the focal length indicated on the lens.

Auto:
Automatically sets the capture range according to the lens.

Off:
Always captures 35mm full-frame image sensor pictures.

Note

- When you attach an APS-C-compatible lens and set [APS-C S35 Shooting] to [Off], you may not achieve optimal shooting results. For example, the edges of the image may become darker.
- When [APS-C S35 Shooting] is set to [On], the angle of view is the same as when shooting with an APS-C-size image sensor.
- [APS-C S35 Shooting] is locked to [On] when shooting movies in 4K 120p/100p or shooting slow-motion/quick-motion movies in 240fps/200fps.

Related Topic

- Angle of view

TP1002110603

5-069-971-11(6) Copyright 2026 Sony Corporation

Angle of view

The angle of view switches to the equivalent of full frame or APS-C/Super 35mm, depending on the setting for [APS-C S35 Shooting] and the attached lens. The angle of view is also different for still image shooting and movie shooting.

Angle of view equivalent to full frame

(A) When shooting still images
(B) When recording movies (other than 4K 60p/50p, or 4K 60p/50p with [4K angle of view Priority] set to [On])
(C) When recording movies (4K 60p/50p with [4K angle of view Priority] set to [Off])

The camera shoots with an angle of view equivalent to full frame in the following situations.

- When shooting still images
  - [APS-C S35 Shooting] is set to [Auto], and a full frame shooting-compatible lens is attached.
  - [APS-C S35 Shooting] is set to [Off].
- When shooting movies
  All of the following conditions are met:
  - [APS-C S35 Shooting] is set to [Off], or [APS-C S35 Shooting] is set to [Auto] and a full-frame shooting compatible lens is attached.
  - The movie format and frame rate are set to a value other than 4K 60p/50p or are set to 4K 60p/50p with [4K angle of view Priority] set to [On].

Note

- The angle of view becomes APS-C-size/Super 35mm equivalent when shooting movies in 4K 120p/100p.
- The angle of view becomes APS-C-size/Super 35mm equivalent when shooting slow-motion/quick-motion movies in HD 240fps/200fps.

Angle of view equivalent to APS-C size/Super 35mm

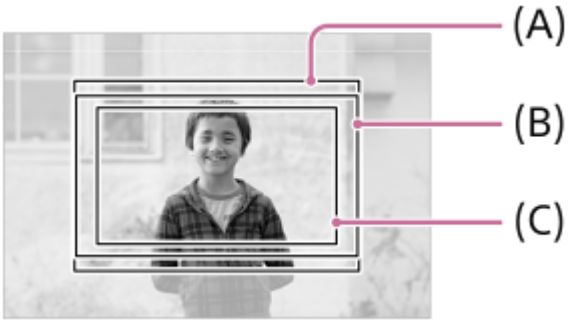

(A) When shooting still images
(B) When recording movies (other than 4K 120p/100p, or 4K 120p/100p with [4K angle of view Priority] set to [On])
(C) When recording movies (4K 120p/100p with [4K angle of view Priority] set to [Off])

The camera shoots with an angle of view equivalent to the APS-C size or Super 35mm in the following situations. The angle of view becomes approx. 1.5 times the focal length indicated on the lens.

- [APS-C S35 Shooting] is set to [On], or [APS-C S35 Shooting] is set to [Auto] and an APS-C-format dedicated lens is attached.

Related Topic

- File Format (movie)
- Movie Settings (movie)
- APS-C S35 (Super 35mm) Shooting (still image/movie)
- 4K angle of view Priority

TP1002148572

5-069-971-11(6) Copyright 2026 Sony Corporation

Touch Operation

S&Q

Sets whether or not to activate touch operations on the monitor.

1. **MENU → (Setup) → [Touch Operation] → [Touch Operation] → desired setting.**

Menu item details

On:
Activates touch operations.

Off:
Deactivates touch operations.

Related Topic

- Touch Panel Settings
- Touch Panel/Pad
- Touch Sensitivity
- Touch panel

TP1002142872

5-069-971-11(6) Copyright 2026 Sony Corporation

Touch Panel/Pad

Touch operations on the monitor are referred to as “touch panel operations,” and touch operations when shooting with the viewfinder are referred to as “touch pad operations.” You can select whether to activate touch panel operations or touch pad operations.

1. **MENU → (Setup) → [Touch Operation] → [Touch Panel/Pad] → desired setting.**

Menu item details

Both Valid:
Activates both touch panel operations on the monitor and touch pad operations when shooting with the viewfinder.

Touch Panel Only:
Activates only touch panel operations on the monitor.

Touch Pad Only:
Activates only touch pad operations when shooting with the viewfinder.

Related Topic

- Touch Operation

TP1002148544

5-069-971-11(6) Copyright 2026 Sony Corporation

Touch Panel Settings

S&Q

You can adjust settings related to touch panel operations on the monitor.

1 **MENU → (Setup) → [Touch Operation] → [Touch Panel Settings] → desired setting.**

Menu item details

Shooting Screen:
Shooting Screen: Sets whether to enable touch operations on the shooting screen. ([On] / [Off])

Footer Icon Touch: Sets whether to enable touch operations for the footer icons at the bottom of the shooting standby screen. ([On] / [Off])

Swipe Right: Sets the operation when swiping right on the shooting standby screen. ([Icon Display: Left] / [Icon Display: L&R] / [Off])

Swipe Left: Sets the operation when swiping left on the shooting standby screen. ([Icon Display: Right] / [Icon Display: L&R] / [Off])

Swipe Up: Sets the operation when swiping up on the shooting standby screen. ([Open the Fn Menu] / [Off])

Touch Func. in Shooting: Sets the operation when touching on a subject on the shooting screen. ([Touch Focus] / [Touch Tracking] / [Touch Shutter] / [Touch AE] / [Off])

Double Tap During AF: Sets the operation when double-tapping the shooting screen during autofocus. ([Focus Position Reset]/[Off])

Icon When Monitor Flipped: Sets whether to flip the positions of the touch function icons on the left and right in accordance with the monitor when the monitor is flipped. ([Flip] / [Do Not Flip])

Playback Screen:
Sets whether to enable touch operations on the playback screen. ([On] / [Off])

Menu Screen:
Sets whether to enable touch operations on the menu screen. ([On] / [Off])

Hint

- You can select whether to simultaneously perform [Touch AE] by pressing the left/right sides of the control wheel when [Touch Func. in Shooting] is set to [Touch Focus] / [Touch Tracking] / [Touch Shutter]. When you perform [Touch AE], you can fine-tune the brightness by sliding the brightness adjustment bar that appears after touching.

Note

- Regardless of the settings for [Touch Panel Settings], the touch operations during shooting are disabled in the following situations:
  - when [Touch Operation] is set to [Off]
  - when [Touch Panel/Pad] is set to [Touch Pad Only]
- You cannot fine-tune the brightness using the brightness adjustment bar when [Touch Func. in Shooting] is set to [Touch Shutter+AE].
- You cannot reset the focus frame to the center by double-tapping the shooting screen when [Touch Func. in Shooting] is set to [Touch Shutter] or [Touch AE].

Related Topic

- Touch function icons
- Touch panel
- Touch Operation
- Touch Panel/Pad
- Focusing using touch operations (Touch Focus)
- Starting tracking with touch operations (Touch Tracking)
- Shooting with touch operations (Touch Shutter)
- Adjusting the exposure with touch operations (Touch AE)
- Fn (function) button
- Enlarging an image being played back (Enlarge Image)
- MENU button
- Main menu (shooting setting list)

TP1002154685

5-069-971-11(6) Copyright 2026 Sony Corporation

Touch Pad Settings

S&Q

You can adjust settings related to touch pad operations during viewfinder shooting.

1 **MENU → (Setup) → [Touch Operation] → [Touch Pad Settings] → desired setting.**

Menu item details

Operation in Vertical Orientation :
Sets whether to enable touch pad operations during vertically oriented viewfinder shooting. You can prevent erroneous operations during vertically oriented shooting caused by your nose, etc. touching the monitor.

Touch Position Mode:
Sets whether to move the focusing frame to the position touched on the screen ([Absolute Position]), or move the focusing frame to the desired position based on the direction of dragging and the amount of movement ([Relative Position]).

Operation Area:
Sets the area to be used for touch pad operations. Restricting the operational area can prevent erroneous operations caused by your nose, etc. touching the monitor.

About Touch Positioning Mode

Selecting [Absolute Position] lets you move the focusing frame to a distant position more quickly because you can directly specify the position of the focusing frame with touch operations.

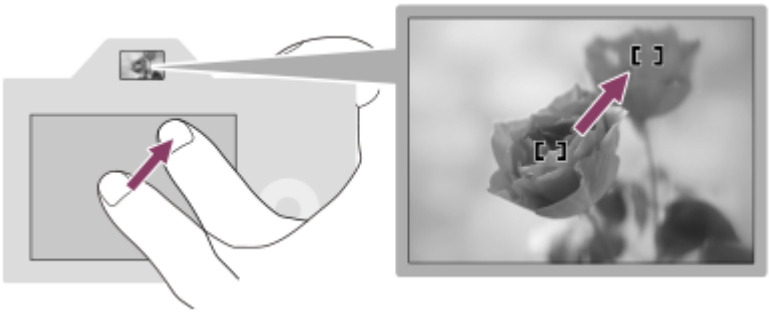

Selecting [Relative Position] lets you operate the touch pad from wherever is easiest, without having to move your finger over a wide area.

Hint

- In touch pad operations when [Touch Position Mode] is set to [Absolute Position], the area set in [Operation Area] is treated as the entire screen.

Related Topic

- Touch Panel/Pad

TP1002148324

5-069-971-11(6) Copyright 2026 Sony Corporation

Touch Sensitivity

S&Q

Sets the touch operation sensitivity.

1 **MENU → (Setup) → [Touch Operation] → [Touch Sensitivity] → desired setting.**

Menu item details

Sensitive:
The touch responsivity is better than with [Standard].

Standard:
Sets the touch sensitivity to normal.

Hint

- If you want to deactivate touch operations on the monitor, set [Touch Operation] to [Off].
- If you are not wearing gloves, set [Touch Sensitivity] to [Standard].

Note

- Even if the touch sensitivity is set to [Sensitive], the touch panel/pad may not react properly depending on the gloves used.

TP1002151192

5-069-971-11(6) Copyright 2026 Sony Corporation

Focusing using touch operations (Touch Focus)

[Touch Focus] allows you to specify a position where you want to focus using touch operations.
Configure the settings as follows from MENU → (Setup) → [Touch Operation] in advance:

- [Touch Operation]: [On]
- [Touch Panel Settings] → [Shooting Screen] → [Shooting Screen]: [On]

This function is available when [Focus Area] is set to one of following parameters. However, the function may not be available depending on the setting for [Focus Area Limit].

- [Wide]
- [Zone]
- [Center Fix]
- [Tracking: Wide]
- [Tracking: Zone]
- [Tracking: Center Fix]

1. **MENU → (Setup) → [Touch Operation] → [Touch Panel Settings] → [Shooting Screen] → [Touch Func. in Shooting] → [Touch Focus].**

Specifying the position where you want to focus in the still image mode

When performing auto-focusing, you can specify the position where you want to focus using touch operations. After touching the monitor and specifying a position, press the shutter button halfway down to focus.

1. Touch the monitor.
   - When shooting with the monitor, touch the position where you want to focus.
   - When shooting with the viewfinder, you can move the position of the focus by touching and dragging on the monitor while looking through the viewfinder.

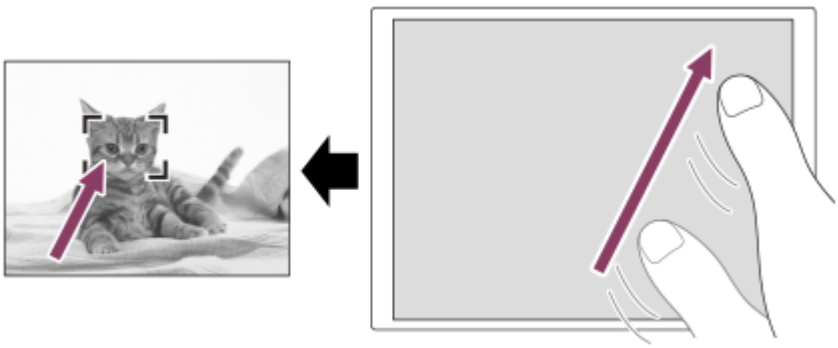

   - To cancel focusing with touch operations, touch (Touch focus release) icon or press the center of the control wheel if shooting with the monitor, and press the center of the control wheel if shooting with the viewfinder.

2. Press the shutter button halfway down to focus.
   - Press the shutter button all the way down to shoot images.

Specifying the position where you want to focus in the movie recording mode

The camera will focus on the touched subject.

1. Touch the subject on which you want to focus before or during recording.

- When [Focus Mode] is set to [Continuous AF], the focus mode temporarily switches to manual focus, and the focus can be adjusted using the focus ring (spot focus). Spot focus is not available when shooting with the viewfinder.
- To cancel spot focus, touch (Touch focus release) icon or press the center of the control wheel.
- When [Focus Mode] is set to [Manual Focus], the focus mode temporarily switches to [Continuous AF]. When the touched area is in focus, the focus mode returns to manual focus.

Hint

- If you set [Touch Func. in Shooting] to [Touch Focus+AE], the brightness will be set according to the subject you touched. This will also allow you to fine-tune the brightness by sliding the brightness adjustment bar that appears after touching.
- In addition to the touch focus function, touch operations such as the following are also available.
  - The focusing frame for [Spot]/[Expand Spot]/[Custom] can be moved by dragging.
  - When shooting still images in the manual focusing mode, the focus magnifier can be used by double-tapping the monitor.

Note

- The touch focus function is not available in the following situations:
  - When shooting still images in the manual focusing mode
  - When using the digital zoom in the still image shooting mode
  - When using the LA-EA4

Related Topic

- Touch Operation
- Touch Panel/Pad
- Touch Panel Settings
- Selecting the focus area (Focus Area)

TP1002142873

5-069-971-11(6) Copyright 2026 Sony Corporation

Starting tracking with touch operations (Touch Tracking)

You can use touch operations to select a subject you want to track in the still image shooting mode and movie recording mode.
Configure the settings as follows from MENU → (Setup) → [Touch Operation] in advance:

- [Touch Operation]: [On]
- [Touch Panel Settings] → [Shooting Screen] → [Shooting Screen]: [On]

1. **MENU → (Setup) → [Touch Operation] → [Touch Panel Settings] → [Shooting Screen] → [Touch Func. in Shooting] → [Touch Tracking].**

2. **Touch the subject that you want to track on the monitor.**

   Tracking will start.

   - When shooting with the viewfinder, you can use the touch pad to select a subject you want to track.

Hint

- To cancel tracking, touch (Tracking release) icon or press the center of the control wheel.
- If you set [Touch Func. in Shooting] to [TouchTracking+AE], the brightness will be set according to the subject you touched. This will also allow you to fine-tune the brightness by sliding the brightness adjustment bar that appears after touching.

Note

- [Touch Tracking] is unavailable in the following situations:
  - When [Focus Mode] is set to [Manual Focus] in still image shooting mode.
  - When using Smart Zoom, Clear Image Zoom, or Digital Zoom in the still image shooting mode
- If the focus mode is switched to [Manual Focus] while [Touch Func. in Shooting] is set to [Touch Tracking] in still image shooting mode, the setting value for [Touch Func. in Shooting] will be changed to [Touch Focus].

Related Topic

- Touch Operation
- Touch Panel/Pad
- Touch Panel Settings

TP1002149665

5-069-971-11(6) Copyright 2026 Sony Corporation

Shooting with touch operations (Touch Shutter)

The camera automatically focuses on the point you touch and shoots a still image.
Configure the settings as follows from MENU → (Setup) → [Touch Operation] in advance:

- [Touch Operation]: [On]
- [Touch Panel Settings] → [Shooting Screen] → [Shooting Screen]: [On]

1. **MENU → (Setup) → [Touch Operation] → [Touch Panel Settings] → [Shooting Screen] → [Touch Func. in Shooting] → [Touch Shutter].**

2. **Touch the subject on which you would like to focus.**

   The camera focuses on the subject you touched, and a still image is recorded.

Hint

- If you set [Touch Func. in Shooting] to [Touch Shutter+AE], the brightness will be set according to the subject you touched.
- You can operate the shooting functions below by touching the monitor:
  - Shooting burst images using the touch shutter
    When [Drive Mode] is set to [Cont. Shooting], you can record burst images while touching the monitor.
  - Shooting continuous bracket images using the touch shutter
    The product shoots three images while automatically shifting the exposure from base, to darker, and then to lighter. When [Drive Mode] is set to [Cont. Bracket], keep touching the monitor until the shooting ends. After the recording you can select the image you prefer.

Note

- The [Touch Shutter] function is unavailable in the following situations:
  - During viewfinder shooting
  - When shooting movies
  - When shooting slow-motion/quick-motion movies
  - When [Focus Mode] is set to [Manual Focus]
  - When [Focus Area] is set to [Spot] / [Expand Spot] / [Custom] / [Tracking: Spot XL] / [Tracking: Spot L] / [Tracking: Spot M] / [Tracking: Spot S] / [Tracking: Spot XS] / [Tracking: Expand Spot] / [Tracking: Custom 1] / [Tracking: Custom 2] / [Tracking: Custom 3]
  - While using the digital zoom function
  - While using the Clear Image Zoom
  - While using the Smart Zoom
  - When a Mount Adaptor is attached
- When using Clear Image Zoom or Digital Zoom while [Touch Func. in Shooting] is set to [Touch Shutter], the setting value temporarily changes from [Touch Shutter] to [Off].
- If the focus mode is switched to [Manual Focus] while [Touch Func. in Shooting] is set to [Touch Shutter], the setting value for [Touch Func. in Shooting] will change to [Touch Focus].

Related Topic

- Touch Operation

- Touch Panel Settings

TP1002153943

5-069-971-11(6) Copyright 2026 Sony Corporation

Adjusting the exposure with touch operations (Touch AE)

You can automatically set the exposure based on the brightness of a point you touch.
Configure the settings as follows from MENU → (Setup) → [Touch Operation] in advance:

- [Touch Operation]: [On]
- [Touch Panel Settings] → [Shooting Screen] → [Shooting Screen]: [On]

1. **MENU → (Setup) → [Touch Operation] → [Touch Panel Settings] → [Shooting Screen] → [Touch Func. in Shooting] → select [Touch AE].**

2. **Touch the point that you want to set as the basis for the exposure.**

   The camera will set the exposure based on the brightness of the point you touched.

   - You can fine-tune the brightness with sliding the brightness adjustment bar that appears after touching.

Hint

- The adjustment using the brightness adjustment bar is reflected in the exposure compensation value.
- When [Touch Func. in Shooting] is set to [Touch Focus]/[Touch Tracking]/[Touch Shutter], you can select whether or not to perform [Touch AE] at the same time by pressing the left or right side of the control wheel.

Note

- [Touch AE] is not available in the following situations:
  – When using digital zoom function
- If the subject is extremely bright or dark, the adjustment bar may not be sufficiently effective.

Related Topic

- Touch Operation
- Touch Panel Settings

TP1002156919

5-069-971-11(6) Copyright 2026 Sony Corporation

Silent Mode Settings (still image/movie)

S&Q

You can configure settings related to the silent mode, which allows you to shoot without shutter sounds or electronic sounds. You can also set whether or not to change the settings for other functions that emit sounds from the camera when the camera is set to the silent mode.

1. **MENU → / (Shooting) → [Shutter/Silent] → [Silent Mode Settings] → desired setting.**

Menu item details

Silent Mode:
Sets whether or not to shoot without shutter sounds or electronic sounds. ([On]/[Off])
When set to [On], [Shutter Type] and [Shutter Type in Interval] become locked to [Electronic Shutter], and [Audio Signal(Shooting)] becomes locked to [Off].

Target Function Settings:
Sets whether or not to simultaneously change the settings for other functions that emit sounds from the camera when the camera is set to the silent mode. ([Aperture Drive in AF]/[Shutter When Pwr OFF]/[Auto Pixel Mapping])
If you select [Not Target], the setting values for each function will be retained even in the silent mode.

Note

- Use the [Silent Mode] function on your own responsibility, while taking sufficient consideration to the privacy and portrait rights of the subject.
- Even if [Silent Mode] is set to [On], it will not be completely silent.
- Even if [Silent Mode] is set to [On], the operating sound of the aperture and focus will sound.
- If [Auto Pixel Mapping] is set to [On], shutter sounds may occasionally be heard when the power is turned off. This is not a malfunction.
- If [Shutter When Pwr OFF] under [Anti-dust Function] is set to [On], a shutter sound will be heard when the camera is turned off.
- Image distortion caused by the movement of the subject or the camera may occur.
- If you shoot images under instantaneous lightning or flickering lights, such as the flash light from other cameras or fluorescent lighting, a striping effect may occur on the image.
- When [Silent Mode] is set to [On], the following functions are not available:
  - Flash shooting
  - Long Exposure NR
  - e-Front Curtain Shut.
  - BULB shooting
  - Anti-flicker Shoot.

Related Topic

- Interval Shoot Func.
- Aperture Drive in AF
- Anti-dust Function

- Auto Pixel Mapping

TP1002142834

5-069-971-11(6) Copyright 2026 Sony Corporation

Shutter Type

You can set whether to shoot with a mechanical shutter or an electronic shutter.

1. **MENU → (Shooting) → [Shutter/Silent] → [Shutter Type] → desired setting.**

Menu item details

Mechanical Shutter:
Shoot with the mechanical shutter only.

Electronic Shutter:
Shoot with the electronic shutter only.

Hint

- In the following situations, set the [Shutter Type] to [Electronic Shutter].
  - When shooting with a high-speed shutter in a bright environment such as outside in bright sunlight, the beach, or snowy mountains.
  - When you want to increase the speed of continuous shooting.

Note

- In rare cases, the shutter sound may be produced when the power is turned off even if the [Shutter Type] is set to [Electronic Shutter]. However, this is not a malfunction.
- When [Shutter Type] is set to [Electronic Shutter], the following functions are not available:
  - Flash shooting
  - Long Exposure NR
  - e-Front Curtain Shut.
  - BULB shooting
  - Anti-flicker Shoot.

TP1002147326

5-069-971-11(6) Copyright 2026 Sony Corporation

Using the electronic shutter

Using the electronic shutter lets you perform various kinds of shooting that are difficult to achieve using the mechanical shutter, such as shooting without sounds or shaking, shooting with a super-fast shutter, and blackout-free shooting*.

* During blackout-free shooting, the screen does not black out or drop frames and you can keep looking at the subject through the viewfinder or monitor while shooting images.

Shutter types and camera performance

The camera's shutter speed range, shutter sound, occurrence of blackout, and availability of the anti-flicker shooting or the flash for each setting are as follows:

	Shutter Type: Mechanical Shutter	Shutter Type: Electronic Shutter
Shutter speed	Single shooting: BULB – 1/8000 Continuous shooting: 30 – 1/8000	30 – 1/16000*1
Shutter sound	Mechanical shutter sound	Electronic shutter sound
Blackout	Occurs	Blackout-free*2 *3
Flash	Available	Unavailable
Anti-flicker shooting	Available	Unavailable
Shooting with variable shutter	Available	Available

*1 When you perform continuous shooting with the continuous shooting speed set to [30 images/s], the shutter speed ranges from 1/30 second to 1/16000 second.
*2 When [Shoot. Start Display] is set to [On], blackout occurs only when the first image is shot.
*3 Blackout will occur when you start shooting with a shutter speed slower than 1/8 second.

Advanced shooting using the electronic shutter: Shooting without shutter sound

You can use the electronic shutter to shoot without shutter sound.

1. MENU → (Shooting) → [Shutter/Silent] → [Silent Mode Settings] → [Silent Mode] → [On].

Advanced shooting using the electronic shutter: Blackout-free continuous shooting

You can use the electronic shutter to perform continuous shooting with focus and exposure tracking, without the screen blacking out.

1. MENU → (Shooting) → [Shutter/Silent] → [Shutter Type] → [Electronic Shutter].
2. Turn the mode dial and select P (Program Auto), A (Aperture Priority), S (Shutter Priority), or M (Manual Exposure), then set the shutter speed and aperture value. (For example: shutter speed of 1/250 second and aperture value of F2.8)
   - The product will not adjust the exposure in manual exposure mode when [ISO] is set to other than [ISO AUTO].
3. MENU → (Shooting) → [Drive Mode] → [Drive Mode] → [Cont. Shooting].

4. Select MENU → AF/MF (Focus) → [AF/MF] → [Focus Mode] → [Continuous AF] and then start shooting images.

Hint

- If you want to display the timing of shooting on the screen during blackout-free shooting, adjust the setting using MENU → (Setup) → [Display Option] → [Shoot. Timing Display].
- To take advantage of the performance of the camera, we recommend that you use a UHS-II card or CFexpress Type A memory card.

Note

- When shooting without the shutter sound, do so on your own responsibility, with sufficient consideration to the privacy and portrait rights of the subject.
- Even if you set the camera to shoot without the shutter sound, it will not be completely silent.
- Even if you set the camera to shoot without the shutter sound, the aperture and focus will make sounds.
- When using a lens compatible with Aperture Drive in AF, sound from the aperture drive may be audible during continuous shooting if [Aperture Drive in AF] is set to [Focus Priority].
- During continuous shooting with the electronic shutter, the refresh rate of the screen display becomes slow when the shutter speed is slow. If you want the screen display to be smooth in order to track the subject, set a shutter speed faster than 1/60 second. Alternatively, set [Frame Rate Low Limit] under [Live View Display Set.] to [On]. If you set [Frame Rate Low Limit] to [On], blackout may occur depending on the shutter speed.
- The electronic shutter operates differently when a Mount Adaptor is attached on the camera.

Related Topic

- Shutter Type
- Silent Mode Settings (still image/movie)
- Shoot. Timing Display (still image)
- Cont. Shooting
- Shoot. Start Display (still image)
- Anti-flicker Set.
- Live View Display Set.

TP1002147354

5-069-971-11(6) Copyright 2026 Sony Corporation

Shoot. Start Display (still image)

Sets whether or not to indicate the shutter release timing with a black screen during blackout-free shooting. The black screen makes it easier to visually confirm when the shutter is released.

1. **MENU → (Shooting) → [Shutter/Silent] → [Shoot. Start Display] → desired setting.**

Menu item details

On:
The screen blacks out when shooting the first image during blackout-free shooting.

Off:
The screen does not black out when shooting the first image during blackout-free shooting.

Related Topic

- Using the electronic shutter

TP1002147391

5-069-971-11(6) Copyright 2026 Sony Corporation

Shoot. Timing Display (still image)

Sets whether or not to display marks (such as a frame) on the screen while shooting. This function is useful in situations where it is difficult to determine the timing of shooting just by looking at the screen, such as when the shutter sound is turned off.

1. **MENU → (Setup) → [Display Option] → [Shoot. Timing Display] → desired setting.**

Menu item details

On: Type1:
Displays a frame (dark color) around the focusing frame.

On: Type2:
Displays a frame (light color) around the focusing frame.

On: Type3:
Displays ■ (dark color) in the four corners of the screen.

On: Type4:
Displays ■ (light color) in the four corners of the screen.

Off:
Does not display the shutter release timing during blackout-free shooting.

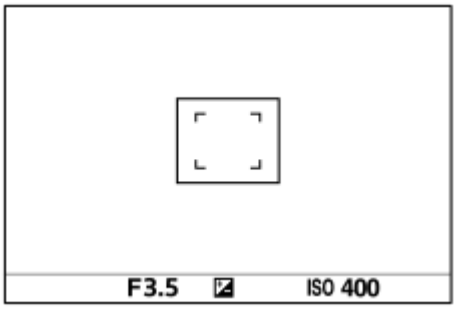

[On: Type1] / [On: Type2] (Example: [Focus Area] is set to [Center Fix])

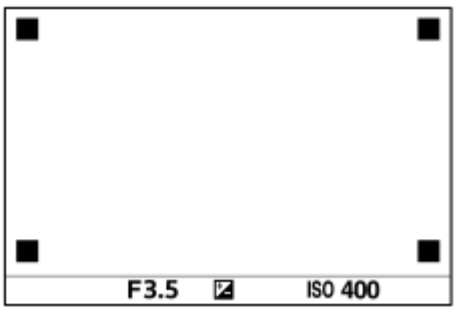

[On: Type3] / [On: Type4]

Related Topic

- Using the electronic shutter

5-069-971-11(6) Copyright 2026 Sony Corporation

e-Front Curtain Shut.

The electronic front curtain shutter function shortens the time lag between when the shutter button is pressed and the shutter is released.

1. **MENU → (Shooting) → [Shutter/Silent] → [e-Front Curtain Shut.] → desired setting.**

Menu item details

On:
Uses the electronic front curtain shutter function.

Off:
Does not use the electronic front curtain shutter function.

Note

- When you shoot at high shutter speeds with a large-aperture lens attached, out-of-focus circle produced by the bokeh effect may get cut off because of the shutter mechanism. If this happens, set [e-Front Curtain Shut.] to [Off] or set [Shutter Type] to [Electronic Shutter].
- When a lens made by another manufacturer (including a Minolta/Konica-Minolta lens) is used, set [e-Front Curtain Shut.] to [Off] or set [Shutter Type] to [Electronic Shutter]. If you set [e-Front Curtain Shut.] to [On], the correct exposure will not be set or the image brightness will be uneven.
- When you shoot at high shutter speeds, the image brightness may become uneven depending on the shooting environment. If this happens, set [e-Front Curtain Shut.] to [Off] or set [Shutter Type] to [Electronic Shutter].

TP1002110601

5-069-971-11(6) Copyright 2026 Sony Corporation

Release w/o Lens (still image/movie)

S&Q

Sets whether or not the shutter can be released when no lens is attached.

1. **MENU → / (Shooting) → [Shutter/Silent] → [Release w/o Lens] → desired setting.**

Menu item details

Enable:
Releases the shutter when no lens is attached. Select [Enable] when attaching the product to an astronomical telescope, etc.

Disable:
Does not release the shutter when a lens is not attached.

Note

- Correct metering cannot be achieved when you use lenses that do not provide a lens contact, such as the lens of an astronomical telescope. In such cases, adjust the exposure manually by checking it on the recorded image.

TP1002110628

5-069-971-11(6) Copyright 2026 Sony Corporation

Release w/o Card

S&Q

Sets whether the shutter can be released when no memory card has been inserted.

1. **MENU → (Shooting) → [Shutter/Silent] → [Release w/o Card] → desired setting.**

Menu item details

Enable:
Releases the shutter even if no memory card has been inserted.

Disable:
Does not release the shutter when no memory card has been inserted.

Note

- When no memory card has been inserted, the images shot will not be saved.
- The default setting is [Enable]. It is recommended that you select [Disable] prior to actual shooting.

TP1002134037

5-069-971-11(6) Copyright 2026 Sony Corporation

Anti-flicker Set.

S&Q

To reduce the impact of flickering from artificial light sources (such as fluorescent or LED light), the camera can time the shooting of images to moments when flickering will have less of an impact, or you can set the shutter speed more finely than usual.
This function reduces differences in exposure and color tone between the upper and lower area of an image during continuous shooting under artificial light sources.

1. **MENU → / (Shooting) → [Shutter/Silent] → [Anti-flicker Set.] → desired setting item.**

Menu item details

Anti-flicker Shoot. (only when shooting still images):
Detects flickering and reduces its impact when the frequency of the light source is 100 Hz or 120 Hz while shooting still images. Flicker is detected by pressing the shutter button halfway down. ([On]/[Off])
When [Anti-flicker Shoot.] is set to [On], press the shutter button halfway down and shoot the image after confirming that Flicker (flicker icon) is displayed.

Var. Shutter:
Reduces the differences in brightness between each image by finely adjusting the shutter speed according to the flickering frequency. ([On]/[Off])
[Var. Shutter] can only be selected when the camera is in an exposure mode that allows you to manually adjust the shutter speed (both still images and movies).
When [Var. Shutter] is set to [On], the shutter-speed denominator is displayed in the decimal format (high-resolution shutter speed).
For example, if the normal shutter speed is set to 1/250 second, the value will be displayed as 250.6. (The numbers may differ from the actual ones.)

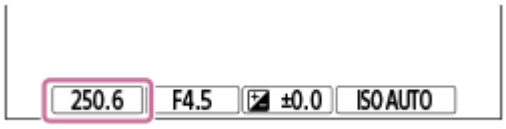

- Set [Var. Shutter] to [Off] to return to the original display.

Var. Shutter Set.:
Sets the shutter speed when [Var. Shutter] is set to [On].
Select a shutter speed that reduces the impact of flickering while checking the monitor. Press the center of the control wheel to automatically set the shutter speed so that the impact of flickering is reduced. The faster you set the shutter speed, the more likely there is to be a difference between the monitor display before shooting and the recorded image. Make sure that the impact of flickering is reduced in the recorded image.

Hint

- When [Anti-flicker Shoot.] is set to [On], the color tone of the resulting image may vary if you shoot the same scene using a different shutter speed. In this case, we recommend that you shoot in the [Shutter Priority] or [Manual Exposure] mode with a fixed shutter speed.
- When [Anti-flicker Shoot.] is set to [On], you can perform anti-flicker shooting by pressing the AF-ON (AF On) button.
- When [Anti-flicker Shoot.] is set to [On], you can perform anti-flicker shooting by pressing the shutter button halfway down or pressing the AF-ON (AF On) button, even in the manual focus mode.

- When [Anti-flicker Shoot Sel.] or [Var. Shutter Select] is assigned to a custom key, you can switch the [Anti-flicker Shoot.] or [Var. Shutter] function on and off by pressing the key.
- When [Anti-flicker Tv Scan] is assigned to a custom key, you can make the camera automatically set the shutter speed to reduce the impact of flickering by pressing the key while shooting. When shooting movies, [Anti-flicker Tv Scan] can be performed only in the shooting standby mode.
- On the [Var. Shutter Set.] screen, you can finely adjust the high-resolution shutter speed using the rear dial L, rear dial R, or control wheel as in the following example.
  250.6 → 253.3 → 256.0 → 258.8*
  You can change the high-resolution shutter speed to an integral multiple value using the front dial, as in the following example.
  125.3 (2 times) ← 250.6 → 501.3 (1/2 times) *
  * The numbers may differ from the actual ones.
- When [Var. Shutter] is set to [On], the high-resolution shutter speed can be finely adjusted on the shooting standby screen. If you want to change the high-resolution shutter speed to an integral multiple value even on the shooting standby screen, assign [Shutter Speed(step)] to a custom key or the “My Dial” setting.
- When you change the [Var. Shutter] setting from [On] to [Off], the high-resolution shutter speed switches to the closest value among normal shutter speeds.

Note

- When you set [Anti-flicker Shoot.] to [On], the image quality of the live view is reduced.
- When you set [Anti-flicker Shoot.] to [On], the shutter release lag may increase slightly. In the continuous shooting mode, the shooting speed may slow down or the interval between shots may become irregular.
- Even when [Anti-flicker Shoot.] is set to [On], the camera may be unable to detect flickering depending on the light source and shooting conditions, such as a dark background. Also, even if the camera detects flickering, its impact may not be reduced sufficiently depending on the light source and the shooting situation. We recommend that you take test shots beforehand.
- [Anti-flicker Shoot.] is not available when shooting in the following situations:
  - While bulb shooting
  - [Shutter Type] is set to [Electronic Shutter]
  - Movie shooting mode
  - During pre-capturing
- The color tone of the shot results may differ depending on the setting of [Anti-flicker Shoot.].
- Setting [Anti-flicker Shoot.] to [On] may not decrease flicker on the live-view screen during continuous shooting.
- When [Var. Shutter] is set to [On], the release time lag may be longer.
- Even when [Var. Shutter] is set to [On], depending on the frequency of the light source, you may be unable to set the appropriate shutter speed and eliminate the impact of flickering. In that case, try the following.
  - Setting a slower shutter speed
  - Switching to another shutter type
  - Changing the setting of the electronic front curtain shutter function
- When you press the shutter button halfway down, flickering may appear temporarily.
- High-resolution shutter speed setting values cannot be registered to [Reg. Custom Shoot Set]. The default shutter speed value will be applied instead.
- When [Var. Shutter] is set to [On], the flash sync speed may be limited to the slower side.

Related Topic

- Differences between the [Anti-flicker Shoot.] and [Var. Shutter] functions
- Assigning frequently used functions to buttons and dials (Custom Key/Dial Set.)
- Changing the function of the dial temporarily (My Dial Settings)

TP1002152714

5-069-971-11(6) Copyright 2026 Sony Corporation

Differences between the [Anti-flicker Shoot.] and [Var. Shutter] functions

This camera has two different functions to reduce the impact of flickering from artificial light sources (such as fluorescent or LED light).
The features of each function and the corresponding shooting conditions are as follows.

Features and shooting conditions	Anti-flicker Shoot.	Var. Shutter
Features	The camera can time the shooting of images to moments when flickering will have less of an impact by detecting the flickering frequency automatically.	You can manually or automatically adjust the shutter speed while checking the impact of flickering on the monitor. When you press the center of the control wheel, flickering is automatically detected and the impact of flickering is removed.
Still images/movies	Still images only	Still images/movies
Shutter type	Mechanical shutter only	Electronic shutter/mechanical shutter*1
Exposure mode	Intelligent Auto / P (Program Auto) / A (Aperture Priority) / S (Shutter Priority) / M (Manual Exposure)	S (Shutter Priority) / M (Manual Exposure)/[Flexible Exp. Mode] with the shutter speed adjusted manually
Types of flickering detectable	Flickering with a frequency of 100 Hz or 120 Hz (such as fluorescent light) only *2	Flickering with a frequency of 100 Hz or 120 Hz (such as fluorescent light) and flickering with a frequency higher than 100 Hz or 120 Hz (such as LED light)

*1 The faster you set the shutter speed, the more likely there is to be a difference between the monitor display before shooting and the recorded image. Make sure that the impact of flickering is reduced in the recorded image.
*2 Even when [Anti-flicker Shoot.] is set to [On], the camera cannot detect flickering frequencies other than 100 Hz or 120 Hz.

Hint

- The impact of flickering can be reduced by using [Anti-flicker Shoot.] and [Var. Shutter] together even in a shooting environment where both 100 Hz/120 Hz flickering and higher-frequency flickering occur. In this case, first set [Anti-flicker Shoot.] and [Var. Shutter] to [On], and then adjust the shutter speed with [Var. Shutter Set.] before shooting images.

Related Topic

- Anti-flicker Set.

TP1002152715

5-069-971-11(6) Copyright 2026 Sony Corporation

The zoom features available with this product

The zoom feature of the product provides a higher magnification zoom by combining various zoom features. The icon displayed on the screen changes, according to the selected zoom feature.

When a power zoom lens is mounted:

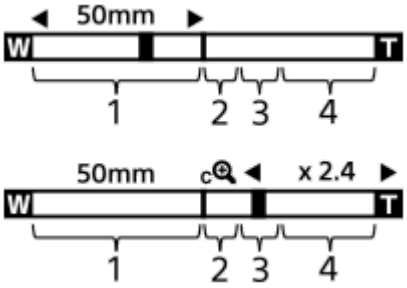

When a lens other than a power zoom lens is mounted:

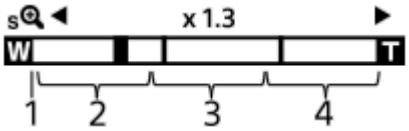

1. **Optical zoom range**
   Zoom images in the zoom range of a lens.
   When a power zoom lens is mounted, the zoom bar of the optical zoom range is displayed.
   When a lens other than a power zoom lens is mounted, the zoom slider becomes locked at the left end of the zoom bar while the zoom position is in the optical zoom range. The magnification is displayed as “×1.0.”

2. **Smart Zoom range** ( )
   Zoom images without causing the original quality to deteriorate by partially cropping an image (only when [JPEG Image Size]/[HEIF Image Size] is set to [M] or [S]).

3. **Clear Image Zoom range** ( )
   Zoom images using an image process with less deterioration.
   When you set [Zoom Range] to [Clear Image Zoom] or [Digital Zoom], you can use this zoom function.

4. **Digital Zoom range** ( )
   You can magnify images using an image process.
   When you set [Zoom Range] to [Digital Zoom], you can use this zoom function.

Hint

- The default setting for the [Zoom Range] is [Optical zoom only].
- The default setting for the [JPEG Image Size]/[HEIF Image Size] is [L]. To use the smart zoom, change [JPEG Image Size]/[HEIF Image Size] to [M] or [S].
- With a power zoom lens mounted, if you enlarge an image beyond the optical zoom range, the camera will automatically switch to Clear Image Zoom or digital zoom.

Note

- The Smart Zoom, Clear Image Zoom and Digital Zoom functions are not available when shooting in the following situations:

— [File Format] is set to [RAW] or [RAW & JPEG]/[RAW & HEIF].
— [Rec Frame Rate] is set to [120p]/[100p].
— During slow-motion/quick-motion shooting with the frame rate set to [240fps]/[200fps] or [120fps]/[100fps]

- You cannot use the Smart Zoom function with movies.
- When you use a zoom function other than the optical zoom in the still image shooting mode, the [Focus Area] setting is disabled and the AF operates with priority on and around the center area.
- When you use the Smart Zoom, Clear Image Zoom or Digital Zoom function, [Metering Mode] is locked to [Multi].
- When using the Smart Zoom, Clear Image Zoom or Digital Zoom function in the still image shooting mode, the following functions are not available:
  — Subject Recognition AF
  — Face Priority in Multi Metering
  — Tracking function
- To use another zoom function than the optical zoom for movies, assign [Zoom] to the desired key using [Custom Key/Dial Set.].

Related Topic

- Clear Image Zoom/Digital Zoom (Zoom)
- Zoom Range (still image/movie)
- About zoom scale

TP1002133885

5-069-971-11(6) Copyright 2026 Sony Corporation

Clear Image Zoom/Digital Zoom (Zoom)

S&Q

When you use a zoom function other than the optical zoom, you can exceed the zoom range of the optical zoom.

1. **MENU → / (Shooting) → [Zoom] → [Zoom Range] → Select [Clear Image Zoom] or [Digital Zoom].**

2. **MENU → / (Shooting) → [Zoom] → [Zoom] → desired value.**

   Press the center of the control wheel to exit.

   - You can also assign the [Zoom] function to the desired key by selecting MENU → (Setup) → [Operation Customize] → [Custom Key/Dial Set.] or [Custom Key/Dial Set.].
   - If you assign [Zoom Operation (T)] or [Zoom Operation (W)] to the desired key in advance by selecting MENU → (Setup) → [Operation Customize] → [Custom Key/Dial Set.] or [Custom Key/Dial Set.], you can zoom in and out simply by pressing that key.

Hint

- When a power zoom lens is attached, you can use the zoom lever or zoom ring to magnify the image. If you exceed the optical zoom magnification, you can switch to a zoom function other than the optical zoom with the same operation.
- Even when you select [Zoom] from MENU to zoom with the power zoom lens attached, the optical zoom is used up to the telephoto end of the lens.

Note

- When you select [Zoom] from MENU to zoom with a power zoom lens attached, step zoom operations cannot be performed.

Related Topic

- Zoom Range (still image/movie)
- The zoom features available with this product
- About zoom scale
- Assigning frequently used functions to buttons and dials (Custom Key/Dial Set.)

TP1002142822

5-069-971-11(6) Copyright 2026 Sony Corporation

Zoom Range (still image/movie)

You can select the zoom setting of the product.

1. **MENU → / (Shooting) → [Zoom] → [Zoom Range] → desired setting.**

Menu item details

Optical zoom only:
Limits the zoom range to the optical zoom. You can use the Smart Zoom function if you set [JPEG Image Size]/[HEIF Image Size] to [M] or [S].

Clear Image Zoom :
Select this setting to use Clear Image Zoom. Even if the zoom range exceeds the optical zoom, the product magnifies images using an image process with less deterioration.

Digital Zoom :
When the zoom range of the Clear Image Zoom is exceeded, the product magnifies images to the largest scale. However, the image quality will deteriorate.

Note

- Set [Optical zoom only] if you want to magnify images within the range in which image quality does not deteriorate.

Related Topic

- The zoom features available with this product
- About zoom scale

TP1002110316

5-069-971-11(6) Copyright 2026 Sony Corporation

Custom Key Z. Speed (still image/movie)

Sets the zoom speed when using the custom key to which [Zoom Operation (T)] / [Zoom Operation (W)] is assigned. This can be set separately for shooting standby and movie recording.

1. **MENU → / (Shooting) → [Zoom] → [Custom Key Z. Speed] → desired setting item.**

Menu item details

Fixed Speed STBY :
Sets the zoom speed during shooting standby. (1 (Slow) to 8 (Fast))

Fixed Speed REC :
Sets the zoom speed during movie recording. (1 (Slow) to 8 (Fast))

Hint

- If a high speed is set for [Fixed Speed STBY] and a slow speed is set for [Fixed Speed REC], the angle of view can be changed quickly during shooting standby and slowly during movie recording.
- The [Custom Key Z. Speed] setting is also applied when performing zoom operations from MENU → / (Shooting) → [Zoom] → [Zoom].

Note

- The zoom speed does not change when you operate the zoom ring of the lens or the zoom lever of the power zoom lens.
- If you increase the zoom speed, the sound of zoom operations may be recorded.

Related Topic

- Clear Image Zoom/Digital Zoom (Zoom)

TP1002130887

5-069-971-11(6) Copyright 2026 Sony Corporation

Remote Zoom Speed (still image/movie)

S&Q

Sets the zoom speed when performing zoom operations using the remote commander (sold separately) or the remote shooting function via a smartphone. This can be set separately for shooting standby and movie recording.

1. **MENU → / (Shooting) → [Zoom] → [Remote Zoom Speed] → desired setting item.**

Menu item details

Speed Type:
Sets whether or not to lock the zoom speed. ([Variable]/[Fix])

Fixed Speed STBY :
Sets the zoom speed during shooting standby when [Speed Type] is set to [Fix]. (1 (Slow) to 8 (Fast))

Fixed Speed REC :
Sets the zoom speed during movie recording when [Speed Type] is set to [Fix]. (1 (Slow) to 8 (Fast))

Hint

- When [Speed Type] is set to [Variable], pressing the zoom lever on the remote commander will increase the zoom speed (some remote commanders do not support variable zoom).
- If [Speed Type] is set to [Fix], a high speed is set for [Fixed Speed STBY], and a slow speed is set for [Fixed Speed REC], the angle of view can be changed quickly during shooting standby and slowly during movie recording.

Note

- If you increase the zoom speed, the sound of zoom operations may be recorded.

TP1002151134

5-069-971-11(6) Copyright 2026 Sony Corporation

About zoom scale

The zoom scale that is used in combination with the zoom of the lens changes according to the selected image size.

When [Aspect Ratio] is [3:2]

Full frame

JPEG Image Size/HEIF Image Size	Optical zoom only (smart zoom)	Clear Image Zoom	Digital Zoom
L: 33M	-	Approx. 2×	Approx. 4×
M: 14M	Approx. 1.5×	Approx. 3×	Approx. 6.1×
S: 8.2M	Approx. 2×	Approx. 4×	Approx. 8×

APS-C size

JPEG Image Size/HEIF Image Size	Optical zoom only (smart zoom)	Clear Image Zoom	Digital Zoom
M: 14M	-	Approx. 2×	Approx. 4×
S: 8.2M	Approx. 1.3×	Approx. 2.6×	Approx. 5.3×

Related Topic

- Clear Image Zoom/Digital Zoom (Zoom)
- The zoom features available with this product
- Zoom Range (still image/movie)

TP1002133949

5-069-971-11(6) Copyright 2026 Sony Corporation

Interchangeable Lens Digital Camera
ILCE-7M5 α7V

Zoom Ring Rotate

Assigns zoom in (T) or zoom out (W) functions to the zoom ring rotation direction. Available only with power zoom lenses that support this function.

1. **MENU → (Setup) → [Operation Customize] → [Zoom Ring Rotate] → desired setting.**

Menu item details

Left(W)/Right(T):
Assigns zoom out (W) function to left-handed rotation and zoom-in (T) function to right-handed rotation.

Right(W)/Left(T):
Assigns zoom in (T) function to left-handed rotation and zoom-out (W) function to right-handed rotation.

TP1002142879

5-069-971-11(6) Copyright 2026 Sony Corporation

Using flash (sold separately)

In dark environments, use the flash to light up the subject while shooting. Also use the flash to prevent camera-shake.

For details on the flash, refer to the instruction manual for the flash.

1. **Attach the flash (sold separately) to the product.**

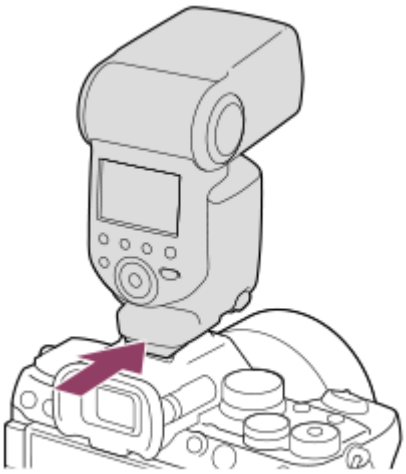

2. **Shoot after you have turned on the flash and it is fully charged.**

(Charging flash icon) blinking: Charging is in progress
(Charging flash icon) lit up: Charging is finished

- The available flash modes depend on the shooting mode and function.

Note

- The light of the flash may be blocked if the lens hood is attached and the lower part of a recorded image may be shaded. Remove the lens hood.
- You cannot use the flash when recording movies. (You can use an LED light when using a flash (sold separately) with an LED light.)
- Before attaching/removing an accessory such as a flash to/from the Multi Interface Shoe, turn off the product first. When attaching an accessory, make sure that the accessory is fixed securely to the product.
- Do not use the Multi Interface Shoe with a commercially available flash that applies voltage of 250 V or more or has the reverse polarity of the camera. Doing so may cause a malfunction.
- When shooting with the flash and the zoom is set to W, the shadow of the lens may appear on the screen, depending on the shooting conditions. If this happens, shoot away from the subject or set the zoom to T and shoot with the flash again.
- The corners of a recorded image may be shaded, depending on the lens.
- When shooting with an external flash, light and dark stripes may appear on the image if the shutter speed is set to faster than 1/4000 seconds. If this occurs, Sony recommends shooting in the manual flash mode and setting the flash level to 1/2 or higher.
- For details on compatible accessories for the Multi Interface Shoe, visit the Sony website, or consult your Sony dealer or local authorized Sony service facility.

Related Topic

- Flash Mode
- Wireless Flash

TP1002133981

5-069-971-11(6) Copyright 2026 Sony Corporation

Flash Mode

S&Q

You can set the flash mode.

1. **MENU → (Exposure/Color) → [Flash] → [Flash Mode] → desired setting.**

Menu item details

Flash Off:
The flash does not operate.

Autoflash:
The flash works in dark environments or when shooting towards bright light.

Fill-flash:
The flash works every time you trigger the shutter.

Slow Sync.:
The flash works every time you trigger the shutter. Slow sync shooting allows you to shoot a clear image of both the subject and the background by slowing the shutter speed.

Rear Sync.:
The flash works right before the exposure is completed every time you trigger the shutter. Rear sync shooting allows you to shoot a natural image of the trail of a moving subject such as a moving car or a walking person.

Note

- The default setting depends on the shooting mode.
- Some [Flash Mode] settings are not available, depending on the shooting mode.

Related Topic

- Using flash (sold separately)

TP1002133982

5-069-971-11(6) Copyright 2026 Sony Corporation

Flash Comp.

Adjusts the amount of flash light in a range of –3.0 EV to +3.0 EV. Flash compensation changes the amount of flash light only. Exposure compensation changes the amount of flash light along with the change of the shutter speed and aperture.

1. **MENU → (Exposure/Color) → [Flash] → [Flash Comp.] → desired setting.**
   - Selecting higher values (+ side) makes the flash level higher, and lower values (- side) makes the flash level lower.

Hint

- By assigning [Flash Comp.] to the desired dial in [Custom Key/Dial Set.] or [My Dial Settings], you can easily adjust the flash output when shooting with TTL exposure.

Note

- [Flash Comp.] does not work when the shooting mode is set to the following modes:
  – [Intelligent Auto]
- The higher flash effect (+ side) may not be visible due to the limited amount of flash light available, if the subject is outside the maximum range of the flash. If the subject is very close, the lower flash effect (- side) may not be visible.
- If you attach an ND filter to the lens or attach a diffuser or a color filter to the flash, the appropriate exposure may not be achieved and images may turn out dark. In this case, adjust [Flash Comp.] to the desired value.

Related Topic

- Using flash (sold separately)
- Assigning frequently used functions to buttons and dials (Custom Key/Dial Set.)

TP1002133983

5-069-971-11(6) Copyright 2026 Sony Corporation

Exp.comp.set

Sets whether to apply the exposure compensation value to control both flash light and ambient light, or just ambient light.

1. **MENU → (Exposure/Color) → [Flash] → [Exp.comp.set] → desired setting.**

Menu item details

Ambient&flash:
Applies the exposure compensation value to control both flash light and ambient light.

Ambient only:
Applies the exposure compensation value to control ambient light only.

Related Topic

- Flash Comp.

TP1002110542

5-069-971-11(6) Copyright 2026 Sony Corporation

Wireless Flash

There are two methods for wireless flash shooting: light-signal flash shooting that uses the light of the flash attached to the camera as a signal light, and radio-signal flash shooting that uses wireless communication. To perform radio-signal flash shooting, use a compatible flash or the Wireless Radio Commander (sold separately). For details on how to set each method, refer to the instruction manual of the flash or the Wireless Radio Commander.

1. **MENU → (Exposure/Color) → [Flash] → [Wireless Flash] → [On].**

2. **Remove the shoe cap from the camera, and then attach the flash or the Wireless Radio Commander.**
   - When performing light-signal wireless flash shooting, set the attached flash as the controller.
     When performing radio-signal wireless flash shooting with a flash attached to the camera, set the attached flash as the commander.

3. **Set up an off-camera flash that is set to wireless mode, or that is attached to the Wireless Radio Receiver (sold separately).**
   - You can perform a test flashing by assigning the [Wireless Test Flash] function to a custom key using [Custom Key/Dial Set.], and then pressing that key.

Menu item details

Off:
Does not use the wireless flash function.

On:
Uses the wireless flash function to make an external flash or flashes emit light at a distance from the camera.

Note

- The off-camera flash may emit light after receiving a light signal from a flash used as the controller of another camera. If this occurs, change the channel of your flash. For details on how to change the channel, refer to the instruction manual for the flash.
- For the flash that is compatible with wireless flash shooting, visit the Sony website, or consult your Sony dealer or local authorized Sony service facility.

Related Topic

- External Flash Set.

TP1002142796

5-069-971-11(6) Copyright 2026 Sony Corporation

Red Eye Reduction

When using the flash, it is fired two or more times before shooting to reduce the red-eye phenomenon.

1. **MENU → (Exposure/Color) → [Flash] → [Red Eye Reduction] → desired setting.**

Menu item details

On:
The flash is always fired to reduce the red-eye phenomenon.

Off:
Does not use Red Eye Reduction.

Note

- Red Eye Reduction may not produce the desired effects. It depends on individual differences and conditions, such as distance to the subject, or whether the subject looks at the pre-strobe or not.

TP1002110588

5-069-971-11(6) Copyright 2026 Sony Corporation

FEL lock

The flash level is automatically adjusted so that the subject gets the optimum exposure during normal flash shooting. You can also set the flash level in advance.
FEL: Flash Exposure Level

1. **MENU → (Setup) → [Operation Customize] → [Custom Key/Dial Set.] → desired button, then assign the [FEL Lock toggle] function to the button.**

2. **Center the subject on which FEL is to be locked, and adjust the focus.**

3. **Press the button to which [FEL Lock toggle] is registered, and set the flash amount.**
   - A pre-flash flashes.
   - The (FEL lock) lights up.

4. **Adjust the composition and shoot the image.**

   - When you want to release the FEL lock, press the button to which the [FEL Lock toggle] is registered again.

Hint

- By setting [FEL Lock hold], you can hold the setting while the button is pressed down. Also, by setting [FEL Lock/AEL hold] and [FEL Lock/AEL tggle.], you can shoot images with the AE locked in the following situations.
  - When [Flash Mode] is set to [Flash Off] or [Autoflash].
  - When the flash cannot go off.

— When using an external flash that is set to manual flash mode.

Note

- The FEL lock cannot be set when a flash is not attached.
- If a flash that does not support the FEL lock is attached, an error message is displayed.
- When both AE and FEL lock are fixed, (AE Lock/FEL Lock) icon lights up.

Related Topic

- Assigning frequently used functions to buttons and dials (Custom Key/Dial Set.)

TP1002142856

5-069-971-11(6) Copyright 2026 Sony Corporation

External Flash Set.

You can configure the settings of a flash (sold separately) attached to the camera using the monitor and control wheel of the camera.
Update the software of your flash to the latest version before using this function.
For details on flash functions, refer to the instruction manual for the flash.

1. **Attach the flash (sold separately) to the Multi Interface Shoe of the camera, and then turn on the camera and the flash.**
2. **MENU → (Exposure/Color) → [Flash] → [External Flash Set.] → desired setting item.**
3. **Configure the setting using the control wheel of the camera.**

Menu item details

Ext. Flash Firing Set.:
Allows you to configure settings related to the firing of the flash, such as the flash mode, flash level, etc.

Ext. Flash Cust. Set.:
Allows you to configure other flash settings, wireless settings, and flash unit settings.

Hint

- If you assign [Ext. Flash Firing Set.] to a desired key using [Custom Key/Dial Set.], you can open the [Ext. Flash Firing Set.] screen simply by pressing that key.
- You can adjust settings by operating the flash even while you are using [External Flash Set.].
- You can also configure the settings for a Wireless Radio Commander (sold separately) attached to the camera.

Note

- You can only use [External Flash Set.] to configure the settings of a flash (sold separately) or Wireless Radio Commander (sold separately) manufactured by Sony and attached to the Multi Interface Shoe of the camera.
- You can only use [External Flash Set.] when the flash is attached directly to the camera. You cannot use this function when shooting with an off-camera flash that is connected using a cable.
- Only some of the functions of the attached flash are configurable using [External Flash Set.]. You cannot perform pairing with other flashes, reset the flash, initialize the flash, etc. via [External Flash Set.].
- [External Flash Set.] is unavailable under the following conditions:
  - When the flash is not attached to the camera
  - When a flash that does not support [External Flash Set.] is attached
  - When the Still/Movie/S&Q dial is set to (Movie) or S&Q (S&Q Motion), or during movie shooting

  Also, [External Flash Set.] may be unavailable depending on the state of the flash.
- For details on flashes and Wireless Radio Commanders that are compatible with this function, refer to the following support page.
  https://www.sony.net/dics/ilce7m5/

Related Topic

- Assigning frequently used functions to buttons and dials (Custom Key/Dial Set.)

TP1002151133

5-069-971-11(6) Copyright 2026 Sony Corporation

Reg. Flash Shooting Set

The shutter speed and ISO sensitivity when shooting with the flash are kept separately from the settings when the flash is not used. The camera determines whether or not the flash is turned on and automatically switches between settings.

1. **MENU → (Exposure/Color) → [Flash] → [Reg. Flash Shooting Set].**
2. **Select an item to set for flash shooting, and then press the center of the control wheel to select the desired setting.**
3. **Add checkmarks to the items that you want to recall when shooting with the flash, and then select [OK].**

   The setting will be saved.

Menu item details

Shutter Speed Range:
Sets [Min] and [Max] for the shutter speed during flash shooting. If you select [Sync Speed], the maximum shutter speed that can be synced will be automatically set.
This setting is available when the shooting mode is set to P or A.

ISO:
Sets the ISO sensitivity for flash shooting.
This setting is available when the shooting mode is set to P, A, S, or M.

Hint

- You can change these settings even when a flash is not attached.
- For details on flashes that are compatible with this function, refer to the following support page.
  https://www.sony.net/dics/ilce7m5/

Related Topic

- ISO (still image/movie)

TP1002154690

5-069-971-11(6) Copyright 2026 Sony Corporation

SteadyShot (still image)

Sets whether or not to use the SteadyShot function.

1. **MENU → (Shooting) → [Image Stabilization] → [SteadyShot] → desired setting.**

Menu item details

On:
Uses [SteadyShot].

Off:
Does not use [SteadyShot].

Hint

- When using a tripod, etc., make sure to turn off the SteadyShot function because this can cause any malfunction when shooting.
- If you assign [SteadyShot Select] to a desired key using [Custom Key/Dial Set.], you can switch the [SteadyShot] function on or off by pressing the key.
- When shooting in a dark place, the (SteadyShot) icon may blink. We recommend that you set a faster shutter speed by decreasing the aperture value or adjusting the ISO sensitivity to a higher value.
- With some lenses, the camera body and the lens work together to perform image stabilization, making it possible to correct larger blurs than usual. Refer to the following URL for compatible lenses.
https://www.sony.net/dics/fnc1002/

Note

- If a lens equipped with a SteadyShot switch is attached, the settings can only be changed using that switch on the lens. You cannot switch the settings using the camera.

Related Topic

- SteadyShot (movie)
- SteadyShot Adjust. (still image/movie)
- Assigning frequently used functions to buttons and dials (Custom Key/Dial Set.)

TP1002110590

5-069-971-11(6) Copyright 2026 Sony Corporation

SteadyShot (movie)

Sets [SteadyShot] effect when shooting movies.

1. **MENU → (Shooting) → [Image Stabilization] → [SteadyShot] → desired setting.**

Menu item details

Dynamic active:
Provides a more powerful SteadyShot effect than [Active].

Active:
Provides a more powerful SteadyShot effect.

Standard:
Reduces camera shake under stable movie shooting conditions.

Off:
Does not use [SteadyShot].

Hint

- When [Dynamic active] or [Active] is selected, with some lenses, the camera body and the lens work together to perform image stabilization, making it possible to correct larger blurs than usual. Refer to the following URL for compatible lenses.
https://www.sony.net/dics/fnc1002/

Note

- When using a tripod, etc., make sure to turn off the SteadyShot function because this can cause any malfunction when shooting.
- Slow pan/tilt movements may cause the image to become distorted when shooting handheld. If distortion occurs, try turning off the SteadyShot function.
- If you change the setting for [SteadyShot], the angle of view will change. When [SteadyShot] is set to [Active], the angle of view becomes narrower. [Dynamic active] performs cropping and pixel enlargement for a SteadyShot effect with less of an impact on the image quality. Therefore, the angle of view becomes even narrower than with [Active].
- The range of ISO sensitivity settings varies depending on the [SteadyShot] setting.
- In the following situations, [Dynamic active] cannot be selected:
  - For normal movies: when [Rec Frame Rate] is set to [120p]/[100p] or higher
    For slow-motion/quick-motion shooting: when [S&Q Frame Rate] is set to [120fps]/[100fps] or higher
- In the following situations, [Active] cannot be selected:
  - For slow-motion/quick-motion shooting: when [S&Q Frame Rate] is set to [240fps]/[200fps] or higher
- When you set [SteadyShot] to [Dynamic active], Clear Image Zoom becomes unavailable.

Related Topic

- SteadyShot (still image)
- SteadyShot Adjust. (still image/movie)

5-069-971-11(6) Copyright 2026 Sony Corporation

SteadyShot Adjust. (still image/movie)

S&Q

You can shoot with an appropriate SteadyShot setting for the attached lens.

1. **MENU → / (Shooting) → [Image Stabilization] → [SteadyShot Adjust.] → desired setting.**

Menu item details

Auto:
Performs the SteadyShot function automatically according to the information obtained from the attached lens.

Manual:
Performs the SteadyShot function according to the focal-length set using [Focal Length]. (8mm-1000mm)

Note

- When the camera cannot obtain focal length information from the lens, the SteadyShot function does not work correctly. Set [SteadyShot Adjust.] to [Manual] and set [Focal Length] to match the lens you are using. The currently set SteadyShot focal length will be displayed along with the (SteadyShot) icon.
- When using an SEL16F28 lens (sold separately) with a teleconverter, etc., set [SteadyShot Adjust.] to [Manual] and set the focal length.

Related Topic

- SteadyShot focal length (still image/movie)

TP1002142845

5-069-971-11(6) Copyright 2026 Sony Corporation

SteadyShot focal length (still image/movie)

S&Q

Sets the focal length information to be used for the built-in SteadyShot function when [SteadyShot Adjust.] is set to [Manual].

1. **MENU → / (Shooting) → [Image Stabilization] → [Focal Length] → desired setting.**

Menu item details

8mm - 1000mm:
The SteadyShot function uses the focal length that you set.
Check the focal-length index on the lens and set the focal-length.

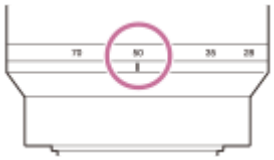

Related Topic

- SteadyShot Adjust. (still image/movie)

TP1002151160

5-069-971-11(6) Copyright 2026 Sony Corporation

Framing Stabilizer

S&Q

The camera automatically corrects the composition so that the subject being tracked is kept at the same position in the composition, allowing you to record movies with the position of the subject stable. This function cannot be used during slow-motion/quick-motion recording and time-lapse movie recording.

1. **MENU → (Shooting) → [Image Stabilization] → [Framing Stabilizer] → desired setting.**

Menu item details

On:
[Framing Stabilizer] is enabled.
Selects [On: Center], which locks the composition so that the subject being tracked is in the center, or [On: Manual], which requires you to manually set the position to which the subject being tracked is locked.

- When [On: Manual] is selected, you can lock/unlock the position of the subject by touching (composition lock icon) on the screen or pressing the center of the control wheel.

Off:
[Framing Stabilizer] is disabled.

Hint

- When the subject is moving, keeping the camera aimed at the subject while shooting will make it easier to correct the composition.
- With [Framing Stabilizer], the angle of view becomes narrower because cropping is performed using images in 4K resolution.
- To avoid deterioration of the image quality, it is recommended that you set [File Format] to HD image quality when using [Framing Stabilizer].

Note

- The camera may focus on a subject outside the area cropped with [Framing Stabilizer].
- It may not be possible to correct the composition depending on the movement of the subject.
- Depending on the settings for [File Format] and [Movie Settings], the angle of view may change when [Framing Stabilizer] is set to [On].

TP1002156997

5-069-971-11(6) Copyright 2026 Sony Corporation

Lens Compensation (still image/movie)

S&Q

Compensates for shading in the corners of the screen or distortion of the screen, or reduces color deviation at the corners of the screen caused by certain lens characteristics.

1. **MENU → / (Shooting) → [Image Quality/Rec] → [Lens Compensation] → desired setting.**

Menu item details

Shading Comp.:
Sets whether to automatically compensate for darkness in the corners of the screen. ([Auto]/[Low]/[Off])

Chromatic Aberration Comp.:
Sets whether to automatically reduce color deviation at the corners of the screen. ([Auto]/[Off])

Distortion Comp.:
Sets whether to automatically compensate for distortion of the screen. ([Auto]/[Off])

Breathing Comp. (only when shooting movies):
Sets whether to automatically compensate for the phenomenon in which the angle of view changes according to the focusing distance during movie recording. ([On]/[Off])

Note

- This function is only available when using an automatic compensation compliant lens.
- Depending on the lens type, darkness in the corners of the screen may not be corrected with [Shading Comp.], or there may be no difference in the correction effect between [Auto] and [Low].
- Depending on the attached lens, [Distortion Comp.] is fixed to [Auto], and you cannot select [Off].
- If [SteadyShot] is set to [Active] or [Dynamic active] in the movie recording mode, [Distortion Comp.] will become locked to [Auto].
- When [Breathing Comp.] is set to [On], the angle of view and the image quality change slightly.
- Depending on the lens, changes in the angle of view may not be fully compensated for even when [Breathing Comp.] is set to [On].

TP1002148565

5-069-971-11(6) Copyright 2026 Sony Corporation

Long Exposure NR

When you set the shutter speed to 1 second(s) or longer (long exposure shooting), noise reduction is turned on for the duration that the shutter is open. With the function turned on, the grainy noise typical of long exposures is reduced.

1. **MENU → (Shooting) → [Image Quality/Rec] → [Long Exposure NR] → desired setting.**

Menu item details

On:
Activates noise reduction for the same duration as the exposure. When noise reduction is in progress, a message appears and you cannot take another picture. Select this to prioritize the image quality.

Off:
Does not activate noise reduction. Select this to prioritize the timing of shooting.

Hint

- The noise reduction process can be canceled by pressing the shutter button during the process. In this case, processing up to the point of cancellation is applied.

Note

- [Long Exposure NR] is unavailable in the following situations:
  - [Shutter Type] is set to [Electronic Shutter].
  - [Drive Mode] is set to [Cont. Shooting] or [Cont. Bracket].
- [Long Exposure NR] cannot be set to [Off] in the following shooting modes:
  - [Intelligent Auto]

TP1002150267

5-069-971-11(6) Copyright 2026 Sony Corporation

High ISO NR

When shooting with high ISO sensitivity, the product reduces noise that becomes more noticeable when the product sensitivity is high.

1. **MENU → (Shooting) → [Image Quality/Rec] → [High ISO NR] → desired setting.**

Menu item details

Normal:
Activates high ISO noise reduction normally.

Low:
Activates high ISO noise reduction moderately.

Off:
Does not activate high ISO noise reduction.

Note

- [High ISO NR] is fixed to [Normal] in the following shooting modes:
  - [Intelligent Auto]

TP1002134034

5-069-971-11(6) Copyright 2026 Sony Corporation

Shoot Mode Sel. Screen

Set whether to display the shooting mode selection screen in the following situations:

- Selecting [S&Q Motion] or [Time-lapse] when the shooting mode is set to the S&Q (slow-motion/quick-motion) mode.

1. **MENU → (Setup) → [Display Option] → [Shoot Mode Sel. Screen] → desired setting.**

Menu item details

Display:
Displays the shooting mode selection screen.

Not Displayed:
Does not display the shooting mode selection screen.

Related Topic

- Still/Movie/S&Q dial and mode dial

TP1002156995

5-069-971-11(6) Copyright 2026 Sony Corporation

Auto Review (still image)

You can check the recorded image on the screen right after the shooting. You can also set the display time for Auto Review.

1. **MENU → (Setup) → [Display Option] → [Auto Review] → desired setting.**

Menu item details

10 Sec/5 Sec/2 Sec:
Displays the recorded image on the screen right after shooting for the selected duration of time. If you perform a magnifying operation during Auto Review, you can check that image using the magnified scale.

Off:
Does not display the Auto Review.

Note

- When you use a function that performs image processing, the image before processing may be displayed temporarily, followed by the image after processing.
- Auto Review is displayed in the mode that you have set using DISP (Display Setting) for playback.

Related Topic

- Enlarging an image being played back (Enlarge Image)

TP1002110596

5-069-971-11(6) Copyright 2026 Sony Corporation

Remain Shoot Display (still image)

S&Q

Sets whether or not to display an indicator of the remaining number of still images that can be continuously shot at the same shooting speed.

1. **MENU → (Setup) → [Display Option] → [Remain Shoot Display] → desired setting.**

Menu item details

Always Display:
Always displays the indicator when shooting still images.

Shoot-Only Display:
While shooting still images, an indicator of the remaining number of still images is displayed. When you press the shutter button halfway down, an indicator of the remaining number of still images is displayed.

Not Displayed:
Does not display the indicator.

Hint

- When the internal camera memory for buffering is full, “SLOW” will be displayed and the continuous shooting speed will decrease.

Related Topic

- Cont. Shooting

TP1002147351

5-069-971-11(6) Copyright 2026 Sony Corporation

Grid Line Display (still image/movie)

Sets whether the grid line is displayed or not during shooting. The grid line will help you to adjust the composition of images.

1. **MENU → / (Shooting) → [Shooting Display] → [Grid Line Display] → desired setting.**

Menu item details

On:
Displays the grid line.

Off:
Does not display the grid line.

Hint

- If you assign [Grid Line Display Select] to a desired key using [Custom Key/Dial Set.] or [Custom Key/Dial Set.], you can show or hide the grid lines by pressing the assigned key.

Related Topic

- Grid Line Type (still image/movie)
- Assigning frequently used functions to buttons and dials (Custom Key/Dial Set.)

TP1002134035

5-069-971-11(6) Copyright 2026 Sony Corporation

Grid Line Type (still image/movie)

S&Q

Sets the displayed type of grid line. The grid line will help you to adjust the composition of images.

1. **MENU → / (Shooting) → [Shooting Display] → [Grid Line Type] → desired setting.**

Menu item details

Rule of 3rds Grid:
Place main subjects close to one of the grid lines that divide the image into thirds for a well-balanced composition.

Golden Ratio Grid:
Place main subjects close to one of the grid lines that divide the image in the golden ratio for a well-balanced composition.

Square Grid:
Square grids make it easier to confirm the horizontal level of your composition. This is useful for assessing the composition when shooting landscapes, closeups, or when performing camera scanning.

Diag. + Square Grid:
Place a subject on the diagonal line to express an uplifting and powerful feeling.

Hint

- If you assign [Grid Line Type] to the desired key using [Custom Key/Dial Set.] or [Custom Key/Dial Set.], you can set the type of grid line by pressing the assigned key.

Related Topic

- Grid Line Display (still image/movie)
- Assigning frequently used functions to buttons and dials (Custom Key/Dial Set.)

TP1002151162

5-069-971-11(6) Copyright 2026 Sony Corporation

Interchangeable Lens Digital Camera
ILCE-7M5 α7V

Live View Display Set.

S&Q

Sets whether or not to show images altered with effects of the exposure compensation, white balance, [Creative Look], etc. on the screen.

1 **MENU → (Shooting) → [Shooting Display] → [Live View Display Set.] → desired setting item.**

Menu item details

Live View Display:
Sets whether to reflect all the shooting settings on the monitor and display the Live View in conditions close to what your picture will look like once the settings are applied, or to display the Live View without reflecting the settings. ([Setting Effect ON] / [Setting Effect OFF])

If you select [Setting Effect OFF], you can easily check the composition even when shooting with the image composition on the Live View display.

Exposure Effect:
Sets whether or not to display the Live View with automatic correction by reflecting the exposure from the flash when [Live View Display] is set to [Setting Effect ON]. ([Exposure Set. & flash] / [Exposure Setting Only])

When using the flash for shooting a portrait, select [Exposure Setting Only] to manually set the exposure based on the ambient lighting.

Frame Rate Low Limit:
Sets whether or not to keep the frame rate of the Live View from becoming too slow. ([On] / [Off])

If you select [On], the frame rate of the Live View will not become slow even when shooting in a dark place, but noise may appear on the Live View or the display may become dark. Also, blackout may occur during continuous shooting depending on the shutter speed.

Hint

- When you use a third-party flash, such as a studio flash, Live View Display may be dark for some shutter speed settings. When [Live View Display] is set to [Setting Effect OFF], Live View Display will be displayed brightly, so that you can easily check the composition.
- If you select [Setting Effect OFF], Live View is always displayed with the appropriate brightness even in [Manual Exposure] mode.
- When [Setting Effect OFF] is selected, the VIEW (VIEW) icon is displayed on the Live View screen.

Note

- [Exposure Effect] is effective only when using a flash manufactured by Sony.
- [Live View Display] cannot be set to [Setting Effect OFF] in the following shooting modes:
  – [Intelligent Auto]
- If you shoot movies in the still image shooting mode, the shooting settings will be reflected in Live View even when [Live View Display] is set to [Setting Effect OFF].
- When [Live View Display] is set to [Setting Effect OFF], the brightness of the shot image will not be the same as that of the displayed Live View.

5-069-971-11(6) Copyright 2026 Sony Corporation

Aperture Preview

S&Q

While you press and hold the key to which you assigned the [Aperture Preview] function, the aperture is stepped down to the set aperture value and you can check the blurriness prior to shooting.

1. **MENU → (Setup) → [Operation Customize] → [Custom Key/Dial Set.] → set the [Aperture Preview] function to the desired key.**
2. **When shooting still images, confirm the images by pressing the key to which [Aperture Preview] is assigned.**

Hint

- Although you can change the aperture value during the preview, the subject may be defocused if you select a brighter aperture. We recommend that you adjust the focus again.

Related Topic

- Assigning frequently used functions to buttons and dials (Custom Key/Dial Set.)
- Shot. Result Preview

TP1002110609

5-069-971-11(6) Copyright 2026 Sony Corporation

Shot. Result Preview

While pressing down the key to which [Shot. Result Preview] is assigned, you can check the image preview with the DRO, shutter speed, aperture and ISO sensitivity settings applied. Check the shooting result preview before shooting.

1. **MENU → (Setup) → [Operation Customize] → [Custom Key/Dial Set.] → set the [Shot. Result Preview] function to the desired key.**
2. **When shooting still images, confirm the images by pressing the key to which [Shot. Result Preview] is assigned.**

Hint

- The DRO settings, shutter speed, aperture and ISO sensitivity settings you have set are reflected on the image for [Shot. Result Preview], but some effects cannot be previewed depending on the shooting settings. Even in that case, the settings you have selected will be applied to the images you shoot.

Related Topic

- Assigning frequently used functions to buttons and dials (Custom Key/Dial Set.)
- Aperture Preview

TP1002110610

5-069-971-11(6) Copyright 2026 Sony Corporation

Bright Monitoring

S&Q

Allows you to adjust the composition when shooting in dark environments. By extending the exposure time, you can check the composition on the viewfinder/monitor even in dark locations such as under the night sky.

1. **MENU → (Setup) → [Operation Customize] → [Custom Key/Dial Set.] → assign the [Bright Monitoring] function to the desired key.**

2. **In a still image shooting mode, press the key to which you assigned the [Bright Monitoring] function, and then shoot an image.**
   - The brightness due to [Bright Monitoring] will continue after shooting.
   - To return the monitor brightness to normal, press the key to which you assigned the [Bright Monitoring] function once again.

Note

- During [Bright Monitoring], [Live View Display] will automatically switch to [Setting Effect OFF], and setting values such as exposure compensation will not be reflected in the live view display. It is recommended that you use [Bright Monitoring] only in dark locations.
- [Bright Monitoring] will be automatically canceled in the following situations.
  - When the camera is turned off.
  - When the shooting mode is changed from P/A/S/M to a mode that is not P/A/S/M.
  - When the focus mode is set to other than manual focus.
- While the following functions are being executed, you cannot turn [Bright Monitoring] on/off by pressing the custom key to which you have assigned [Bright Monitoring].
  - [Auto Magnifier in MF]
  - [Focus Magnifier]
- When using [Bright Monitoring] in dark locations, the shutter speed may be slower than during normal shooting, and the updating speed of the monitor display may be slower. Also, because the measured brightness range is expanded, the exposure may change.

Related Topic

- Assigning frequently used functions to buttons and dials (Custom Key/Dial Set.)
- Live View Display Set.

TP1002134036

5-069-971-11(6) Copyright 2026 Sony Corporation

Emphasized REC Display

S&Q

Sets whether or not to display a red frame around the edges of the camera's monitor while recording a movie. You can easily check whether the camera is in standby or recording, even when you are looking at the camera monitor from an angle or at a distance.

1. **MENU → (Shooting) → [Shooting Display] → [Emphasized REC Display] → desired setting.**

Menu item details

On:
Displays a red frame to indicate that recording is in progress.

Off:
Does not display a frame to indicate that recording is in progress.

Hint

- The frame displayed by this function can also be output to an external monitor connected via HDMI. Set [HDMI Info. Display] to [On].

Related Topic

- HDMI Info. Display

TP1002151165

5-069-971-11(6) Copyright 2026 Sony Corporation

Marker Display (still image)

Displays a marker for the specified aspect ratio on the shooting screen when shooting still images.
If you intend to crop the image to the specified aspect ratio after shooting, the aspect marker will allow you to shoot images along with checking the angle of view after trimming.

1. **MENU → (Shooting) → [Marker Display] → Select a menu item and set the desired parameter.**

Menu item details

Aspect Marker:
Sets whether or not to display the aspect marker. ([On]/[Off])

Aspect Marker Type:
Sets the aspect ratio of the displayed aspect marker. ([1:1]/[5:4]/[4:3]/[16:9]/[1.91:1]/[2.35:1])

Aspect Marker Level:
Sets the color density for the displayed aspect marker. (0 to 15)

Hint

- The aspect marker can be displayed simultaneously with grid lines. In this case, the grid lines are displayed according to the angle of view of the aspect marker.
- The aspect marker that was displayed during shooting can be displayed over the played-back image by setting [Aspect Marker Disp.] to [On].
- With [Crop], you can also trim images according to the aspect marker that was displayed at the time of shooting.
- If you want to display the aspect marker vertically, hold the camera vertically when shooting.

Note

- The aspect marker can be displayed when shooting still images with an aspect ratio of [3:2].
- When the aspect ratio for [Aspect Marker] is set to [1:1]/[5:4]/[4:3], the position of the aspect marker will be different from that of [Aspect Marker] for movie recording even if the same aspect ratio is selected.
- The aspect marker is not displayed on devices connected via HDMI.

Related Topic

- Aspect Marker Disp. (still image)
- Grid Line Display (still image/movie)
- Crop

TP1002158462

5-069-971-11(6) Copyright 2026 Sony Corporation

Marker Display (movie)

S&Q

While shooting movies, you can set whether or not to display markers on the monitor or the viewfinder, and select the types of marker.

1. **MENU → (Shooting) → [Marker Display] → Select a menu item and set the desired parameter.**

Menu item details

Marker Display:
Sets whether or not to display markers. ([On] / [Off])

Center Marker:
Sets whether or not to display the center marker in the middle of the shooting screen. ([Off] / [On])

Aspect Marker:
Sets the aspect marker display. ([Off] / [9:16] / [4:5] / [1:1] / [4:3] / [13:9] / [14:9] / [15:9] / [17:9] / [1.66:1] / [1.85:1] / [1.91:1] / [2:1] / [2.35:1] / [2.39:1])

Safety Zone:
Sets the safety zone display. This becomes the standard range that can be received by a general household TV. ([Off] / [80%] / [90%])

Guideframe:
Sets whether or not to display the guide frame. You can verify whether the subject is level or perpendicular to the ground. ([Off] / [On])

Hint

- You can display several markers at the same time.
- Position the subject at the cross point of [Guideframe] to ensure a balanced composition.

Note

- The markers are displayed when the Still/Movie/S&Q dial is set to (Movie) or S&Q (S&Q Motion), or when shooting movies.
- You cannot display markers when using [Focus Magnifier].
- The markers are displayed on the monitor or viewfinder. (You cannot output the markers.)

TP1002134027

5-069-971-11(6) Copyright 2026 Sony Corporation

Gamma Display Assist

Movies with S-Log3 gamma are assumed to be processed after shooting in order to make use of the wide dynamic range. Images with the HLG gamma are assumed to be displayed on HDR-compatible monitors. They are therefore displayed in low contrast during shooting, and may be difficult to monitor. However, you can use the [Gamma Display Assist] function to reproduce contrast equivalent to that of normal gamma. In addition, [Gamma Display Assist] can also be applied when playing back movies on the camera's monitor/viewfinder.

1. **MENU → (Setup) → [Display Option] → [Gamma Display Assist] → desired setting.**

Menu item details

On:
Uses the gamma display assist function.

Off:
Does not use the gamma display assist function.

Hint

- If you assign [Gamma Disp. Assist Sel.] to a desired key using [Custom Key/Dial Set.], [Custom Key/Dial Set.], or [Custom Key Setting], you can turn the gamma display assist function on or off by pressing the assigned key.

Note

- [Gamma Display Assist] is not applied to movies when displayed on a TV or monitor connected to the camera.
- [Gamma Display Assist] is locked to [Off] in the following situations:
  - When [Log Shooting] is set to [On (Flexible ISO)]

Related Topic

- Picture Profile (still image/movie)
- Gamma Disp. Assist Typ.
- HLG Still Image

TP1002142857

5-069-971-11(6) Copyright 2026 Sony Corporation

Gamma Disp. Assist Typ.

S&Q

Selects the conversion type for [Gamma Display Assist].

1 **MENU → (Setup) → [Display Option] → [Gamma Disp. Assist Typ.] → desired setting.**

Menu item details

Auto:

- Displays images with effects as follows according to the gamma or color mode set in [Picture Profile].
  - When the gamma is set to [S-Log3]: [S-Log3→709(800%)]
  - When the gamma is set to [HLG], [HLG1], [HLG2], or [HLG3], and the color mode is set to [BT.2020]: [HLG(BT.2020)]
  - When the gamma is set to [HLG], [HLG1], [HLG2], or [HLG3], and the color mode is set to [709]: [HLG(709)]
- Displays images with an [HLG(BT.2020)] effect when shooting HLG still images with [HLG Still Image] set to [On].

S-Log3→709(800%):
Displays images with an S-Log3 gamma reproducing contrast equivalent to ITU709 (800%).

HLG(BT.2020):
Displays images after adjusting the image quality of the monitor or viewfinder to a quality that is almost the same as when images are displayed on an [HLG(BT.2020)] compatible monitor.

HLG(709):
Displays images after adjusting the image quality of the monitor or viewfinder to a quality that is almost the same as when images are displayed on an [HLG(709)] compatible monitor.

Hint

- If you assign [Gamma Disp. Assist Typ.] to a desired key using [Custom Key/Dial Set.] or [Custom Key/Dial Set.], you can switch the [Gamma Disp. Assist Typ.] setting.

Note

- When [Gamma Disp. Assist Typ.] is set to [Auto] during playback, an effect is applied to the image as follows:
  - When playing back a movie recorded with [HLG], [HLG1], [HLG2], or [HLG3]: Displays the image with an [HLG(BT.2020)] or [HLG(709)] effect depending on the color mode.
  - When playing back an HLG still image shot with [HLG Still Image] set to [On]: Displays the image with an [HLG(BT.2020)] effect.

  In other situations, movies are displayed according to the gamma setting and color mode setting in [Picture Profile]. In this case, if the gamma setting or color mode of the image being played back does not match the settings in [Picture Profile], the image may not be displayed correctly.
- When playing back images with [Gamma Disp. Assist Typ.] set to a value other than [Auto], if you select a conversion type that does not match the gamma setting or color mode of the image, the image may not be displayed correctly.
- When shooting images with [Gamma Disp. Assist Typ.] set to a value other than [Auto], if you select a conversion type that does not match the gamma setting or color mode set in [Picture Profile], the image may not be displayed correctly.

Related Topic

- Gamma Display Assist
- Picture Profile (still image/movie)
- HDMI Output Settings (movie)

TP1002151166

5-069-971-11(6) Copyright 2026 Sony Corporation

Audio Recording

S&Q

Sets whether to record sounds when shooting movies. Select [Off] to avoid recording the sounds of the lens and the camera operating. This function cannot be used during slow-motion/quick-motion recording and time-lapse movie recording.

1. **MENU → (Shooting) → [Audio Recording] → [Audio Recording] → desired setting.**

Menu item details

On:
Records sound.

Off:
Does not record sound.

Related Topic

- Audio Rec Level

TP1002110566

5-069-971-11(6) Copyright 2026 Sony Corporation

Audio Rec Level

S&Q

You can adjust the audio recording level while checking the level meter. This function cannot be used during slow-motion/quick-motion recording and time-lapse movie recording.

1. **MENU → (Shooting) → [Audio Recording] → [Audio Rec Level].**
2. **Select the desired level using the right/left sides of the control wheel.**

Menu item details

+:
Turns up the audio recording level.

-:
Turns down the audio recording level.

Hint

- When you record audio movies with loud volumes, set [Audio Rec Level] to a lower sound level. Doing so enables you to record more realistic audio. When you record audio movies with lower volumes, set [Audio Rec Level] to a greater sound level to make the sound easier to hear. Check that the volume is at the appropriate level by monitoring the audio recording volume with the connected headphones or the volume level meter on the camera.
- To reset the audio recording level to the default setting, press the (Delete) button.

Note

- Regardless of the [Audio Rec Level] settings, the limiter always operates. However, the limiter will not operate if the audio quantization bitrate is set to 32-bit float.
- [Audio Rec Level] is available only when the shooting mode is set to movie mode.
- The [Audio Rec Level] settings are applied to the internal microphone, the (microphone) terminal input, and the analog audio input* from the Multi Interface Shoe.
  - * For some external microphones, [Audio Rec Level] cannot be set even when the audio input is set to analog transfer. In this case, use the function to adjust the audio recording level of the external microphone.
  - * When the audio input to the external microphone is set to digital transfer, [Audio Rec Level] cannot be set.

TP1002110567

5-069-971-11(6) Copyright 2026 Sony Corporation

Audio Out Timing

S&Q

You can set echo cancellation during audio monitoring and prevent undesirable deviations between video and audio. This function cannot be used during slow-motion/quick-motion recording and time-lapse movie recording.

1. **MENU → (Shooting) → [Audio Recording] → [Audio Out Timing] → desired setting.**

Menu item details

Live:
Outputs audio without delay. Select this setting when audio deviation is a problem during audio monitoring.

Lip Sync:
Outputs audio and video in sync. Select this setting to prevent undesirable deviations between video and audio.

Hint

- When [Audio Out Timing] is set to [Lip Sync], you can monitor sound with the wind noise reduction and noise-cutting effects of [Audio NR Settings] applied while shooting.

Note

- Using an external microphone may result in a slight delay. For details, refer to the operating instructions supplied with the microphone.
- Audio is output with the setting for [Lip Sync] during HDMI output.

Related Topic

- Audio NR Settings

TP1002110568

5-069-971-11(6) Copyright 2026 Sony Corporation

Audio NR Settings

S&Q

You can set whether to reduce noise in the audio input from the built-in microphone and external microphone, respectively. This function cannot be used during slow-motion/quick-motion recording and time-lapse movie recording.

1. **MENU → (Shooting) → [Audio Recording] → [Audio NR Settings] → desired setting item.**

Menu item details

Wind NR: Int Mic:
Reduces wind noise by cutting low-range sound in the audio input from the built-in microphone. When you select [Auto], the camera automatically detects and reduces wind noise. ([Auto]/[On]/[Off])

Wind NR: Ext Mic:
Reduces wind noise by cutting low-range sound in the audio input from the external microphone. ([On]/[Off])

Noise Cut: Int Mic:
Reduces constant background noise and the sound of the lens's power zoom captured in audio input from the built-in microphone. ([On]/[Off])

Noise Cut: Ext Mic:
Reduces constant background noise captured in audio input from the external microphone. ([On]/[Off])

Note

- When using the wind noise reduction or noise-cutting function, the sound quality may differ from normal audio.
- The effectiveness of the wind noise reduction and noise-cutting functions varies depending on the shooting conditions.
- If you change the [Audio NR Settings] setting while recording a movie, noise may be produced when the setting is changed and become recorded in the movie.
- When [Wind NR: Int Mic] is set to [Auto] while [Audio Out Timing] is set to [Live], the wind noise reduction effect cannot be confirmed via audio monitoring during recording. Audio with reduced wind noise is recorded in the movie. Also, when live-streaming audio using the streaming function or outputting audio through HDMI, audio with reduced wind noise is streamed or output.
- When [Noise Cut: Int Mic] or [Noise Cut: Ext Mic] is set to [On] while [Audio Out Timing] is set to [Live], the noise-cutting effect cannot be confirmed via audio monitoring during recording. Audio with noise cut is recorded in the movie. Also, when live-streaming audio using the streaming function or outputting audio through HDMI, audio with the noise-cutting effect applied is streamed or output.
- Even if you set [Noise Cut: Int Mic] or [Noise Cut: Ext Mic] to [On], it may take some time for the noise cut function to take effect.
- The effectiveness of [Noise Cut: Int Mic] in reducing the sound of the lens's power zoom varies depending on the lens used.
- The setting for [Noise Cut: Ext Mic] is applied to input from the (microphone) terminal and analog audio input* from the Multi Interface Shoe.
  - * For some external microphones, [Noise Cut: Ext Mic] cannot be set even when the audio input is set to analog transfer. In this case, use the noise-cut function of the external microphone.
  - * When the audio input from the external microphone is set to digital transfer, [Noise Cut: Ext Mic] cannot be set.

Related Topic

- Audio Out Timing

5-069-971-11(6) Copyright 2026 Sony Corporation

Shoe Audio Set.

S&Q

Sets the digital audio transmitted from a microphone (sold separately) that supports the digital audio interface and is attached to the Multi-Interface Shoe of the camera.
By using an external microphone that supports 96 kHz or 32-bit float, you can record audio with high quality, or record audio in the WAV format as a separate file (when the camera's system software (firmware) is Ver.2.00 or later).
This function cannot be used during slow-motion/quick-motion recording and time-lapse movie recording.

1. **MENU → (Shooting) → [Audio Recording] → [Shoe Audio Set.] → desired setting item.**

Menu item details

Shoe Audio Format:
Sets the sampling frequency and quantization bit rate for digital audio. ([96kHz/32bit float]/[96kHz/24bit]/[48kHz/32bit float]/[48kHz/24bit]/[48kHz/16bit])

- You cannot set a sampling frequency or quantization bit rate that is not supported by the attached microphone.

Shoe Audio Ch No.:
Sets the number of digital audio channels. ([4ch]/[2ch])

- You cannot set [4ch] if a microphone that does not support 4-channel recording is attached.

32bit float WAV Rec.:
Sets whether to record audio in the 32-bit float WAV format separately from the audio data of the movie file. ([On]/[Off])

- You cannot set [On] if a microphone that does not support 32-bit float audio recording is attached.

On 32-bit float WAV files

- The sampling frequency and the number of channels for the WAV file will be the same as the settings in [Shoe Audio Format]/[Shoe Audio Ch No.].
- WAV files cannot be played back on the camera. When playing back on the camera, the audio recorded in the movie file will be played.
- When you delete a movie file, the WAV file recorded simultaneously is also deleted.
- WAV files cannot be transferred using FTP transfer or smartphone transfer functions.

Hint

- The audio level display on the monitor is for 4 channels during 4-channel audio recording.
- Auto gain control is disabled when recording in 32-bit float. This may cause the level meter to display over-levels, but as long as analog clipping is not occurring, you can apply gain adjustments in post-production.
- If a large audio input is applied that would cause analog clipping during 32-bit float recording, a notification will be sent from the compatible accessory. Use the accessory within a range that does not cause a notification. For the specifications of compatible accessories, refer to the instruction manual of the accessory.

Note

- When an external microphone (sold separately) is connected to the (microphone) terminal of the camera, the audio is recorded from the external microphone attached to the (microphone) terminal. You cannot set [Shoe Audio Set.].
- If the attached microphone is set to analog transmission, you cannot set [Shoe Audio Set.].
- Audio cannot be recorded correctly in the following situations during movie recording:
  - When you attach or remove the microphone
  - When digital transmission is switched to analog transmission or vice versa on the microphone side

Related Topic

- 4ch Audio Monitoring (movie)

TP1002318498

5-069-971-11(6) Copyright 2026 Sony Corporation

Interchangeable Lens Digital Camera
ILCE-7M5 α7V

Automatic creation of still images from Shot Marks

S&Q

If you add Shot Marks using a custom key while recording a movie, you can automatically create still images from the movie frames with Shot Marks after recording. Shot Marks can also be added using the shutter button or touch function icon.
If you want to create still images while checking the images with Shot Marks after recording a movie, use [Create Still Image].

1. **MENU → (Shooting) → [Shooting Option] → [AutoCreateStillImage] → desired setting.**

Menu item details

On:
Creates still images from frames with Shot Marks after recording a movie. A message appears while still image creation is in progress, and you cannot shoot new images during this time.
Off:
Does not create still images from frames with Shot Marks after recording a movie.

About the still images created

- You can select either the JPEG or HEIF format for the still images to be created. You can switch the format by selecting MENU → (Shooting) → [Image Quality/Rec] → [JPEG/HEIF Switch].
- The size of the still images created will be the same size as the movie being recorded, according to the [File Format] setting.
- Created still images are recorded on the memory card in the same slot as the movie, regardless of the [Recording Media] setting.

Note

- When [Recording Media] is set to [Simult. Recording], automatically created still images are recorded only on the memory card in the slot selected for [Play Set of Multi. Media].
- When recording a movie across two memory card slots, still images are only created for Shot Marks added to the movie after switching slots.

Related Topic

- Adding Shot Marks with the shutter button (movies)
- Touch function icons
- Creating still images from Shot Marks
- JPEG/HEIF Switch
- File Format (movie)
- Play Set of Multi. Media

TP1002160261

5-069-971-11(6) Copyright 2026 Sony Corporation

Shot Marks after still image creation (shooting)

Sets whether to automatically delete Shot Marks after automatically creating still images while recording a movie using the [AutoCreateStillImage] function.

1. **MENU → (Shooting) → [Shooting Option]→[S after still img crt] → desired setting.**

Menu item details

Auto Delete:
Deletes Shot Marks automatically after creating still images.

Maintain:
Does not delete Shot Marks automatically after creating still images.

Related Topic

- Automatic creation of still images from Shot Marks

TP1002160262

5-069-971-11(6) Copyright 2026 Sony Corporation

TC/UB

The time code (TC) and the user bit (UB) information can be recorded as data attached to movies.

1. **MENU → (Shooting) → [TC/UB] → Select a menu item and set the desired parameter.**

Menu item details

Time Code Preset:
Sets the time code.

User Bit Preset:
Sets the user bit.

Time Code Format:
Sets the recording method for the time code. (Only when [NTSC/PAL Selector] is set to NTSC.)

Time Code Run:
Sets the count up format for the time code.

Time Code Make:
Sets the recording format for the time code on the recording medium.

User Bit Time Rec:
Sets whether or not to record the time as a user bit.

How to set the time code (Time Code Preset)

1. MENU → (Shooting) → [TC/UB] → [Time Code Preset].
2. Turn the control wheel and select the first two digits.
   - The time code can be set between the following range.
     When [60p] is selected: 00:00:00.00 to 23:59:59.29
     * When [24p] is selected, you can select the last two digits of the time code in multiples of four from 00 to 23 frames.
     When [50p] is selected: 00:00:00.00 to 23:59:59.24
3. Set the other digits following the same procedure as in step 2, then press in the center of the control wheel.

How to reset the time code

1. MENU → (Shooting) → [TC/UB] → [Time Code Preset].
2. Press the (Delete) button to reset the time code (00:00:00.00).

How to set the user bit (User Bit Preset)

1. MENU → (Shooting) → [TC/UB] → [User Bit Preset].
2. Turn the control wheel and select the first two digits.
3. Set the other digits following the same procedure as in step 2, then press in the center of the control wheel.

How to reset the user bit

1. MENU → (Shooting) → [TC/UB] → [User Bit Preset].
2. Press the (Delete) button to reset the user bit (00 00 00 00).

How to select the recording method for the time code (Time Code Format *1)

1. MENU → (Shooting) → [TC/UB] → [Time Code Format].

DF:

Records the time code in Drop Frame*2 format.

NDF:

Records the time code in Non-Drop Frame format.

*1 Only when [NTSC/PAL Selector] is set to NTSC.

*2 The time code is based on 30 frames per second. However, a gap between the actual time and the time code will occur during extended periods of recording as the frame frequency of the NTSC image signal is approximately 29.97 frames per second. Drop frame corrects this gap to make the time code and actual time equal. In drop frame, the first 2 frame numbers are removed every minute except for every tenth minute. The time code without this correction is called non-drop frame.

- The setting is fixed to [-] when recording in 24p.

How to select the count up format for the time code (Time Code Run)

1. MENU → (Shooting) → [TC/UB] → [Time Code Run].

Rec Run:

Sets the stepping mode for the time code to advance only while recording. The time code is recorded sequentially from the last time code of the previous recording.

Free Run:

Sets the stepping mode for the time code to advance anytime, regardless of the camera operation.

- The time code may not be recorded sequentially in the following situations even when the time code advances in [Rec Run] mode.
  - When the recording format is changed.
  - When the recording medium is removed.

How to select how the time code is recorded (Time Code Make)

1. MENU → (Shooting) → [TC/UB] → [Time Code Make].

Preset:

Records the newly set time code on the recording medium.

Regenerate:

Reads the last time code for the previous recording from the recording medium and records the new time code consecutively from the last time code. The time code advances in the [Rec Run] mode regardless of the [Time Code Run] setting.

The time code is read from the memory card in the slot designated by [Recording Media] under [Rec. Media Settings]. When [Recording Media] is set to [Simult. Recording], the time code is read from the memory card in Slot 1.

Note

- Updating the camera's system software will reset the time code. Set the time code again.

Related Topic

- TC/UB Disp. Setting

5-069-971-11(6) Copyright 2026 Sony Corporation

TC/UB Disp. Setting

Sets the display of the recording time counter, time code (TC), and user bit (UB) for movies.

1. **MENU → (Setup) → [Display Option] → [TC/UB Disp. Setting] → desired setting.**

Menu item details

Counter:
Displays the time counter of movie recording.

TC:
Displays the time code.

U-Bit:
Displays the user bit.

Related Topic

- TC/UB

TP1002142842

5-069-971-11(6) Copyright 2026 Sony Corporation

Network Streaming (movie)

You can connect the camera to a network, via either a wired or wireless connection, and livestream video and audio from the camera.

1. **Connect the camera and smartphone via Bluetooth.**

2. **Register information such as the connection destination server and stream key for the distribution service to be used in Creators' App.**

3. **On the camera, select MENU → (Network) → [Streaming] → [Network Streaming] → Set [Streaming] to [On].**

   [Streaming:Standby] will appear on the camera screen. Then, the camera will switch to the streaming standby state.

   - You can also select image quality settings, etc. from Creators' App

4. **Press the center of the control wheel to start streaming.**

   [Streaming:Output] will appear on the camera screen.

   - You can also start streaming from Creators' App.
   - Press the center again to exit streaming.

Menu item details

Streaming:
Sets whether to perform network streaming. ([On]/[Off])

Stream Connect Error Display:
Displays error information when the camera is unable to connect to the network or distribution server for network streaming.

Output Img. Quality Set:
Sets the image quality of video output for network streaming. ([Quality]/[Resolution]/[Frame Rate]/[Bit Rate])

Output Information Display:
Displays information for network streaming.

Movie Rec During Streaming:
Sets whether to enable recording to recording media during network streaming. ([Enable]/[Disable])

Emphasized Output Display:
Sets whether to display a blue frame around the entire monitor during network streaming. ([On]/[Off])

Root Certificate Error:
Normally it is recommended to set [Does Not Connect]. If a certificate error is displayed, update the root certificate and connect with the correct authentication.

Output image quality settings

To configure detailed settings for streaming image quality, set [Quality] to [Custom], and set [Resolution], [Frame Rate], and [Bit Rate], respectively.
The setting range of [Bit Rate] varies depending on the combination of [Resolution] and [Frame Rate].

Resolution	Frame Rate	Bit rate setting range	Bit rate default setting
4K (2160p)	30p/25p	38Mbps - 13Mbps	34Mbps
2K (1440p)	30p/25p	38Mbps - 6Mbps	13Mbps
HD (1080p)	60p/50p	27Mbps - 4.5Mbps	9Mbps
	30p/25p	18Mbps - 3Mbps	6Mbps
HD (720p)	60p/50p	13.5Mbps - 2.3Mbps	6Mbps
	30p/25p	9Mbps - 1.5Mbps	4Mbps

Hint

- If you assign the zoom, network streaming, etc. to the dial or control wheel or register them to the function menu, you can adjust these values even during network streaming.
- The format of the streaming data is as follows.
  - Video format: MPEG-H HEVC/H.265 or MPEG-4 AVC/H.264*
  - Audio format: 48 kHz, 16 bit, 2ch

  * While streaming using RTMP/RTMPS, the video format is MPEG-4 AVC/H.264.
- When using an external microphone, you can minimize deviations between your voice and the movements of your mouth by connecting the microphone to the (microphone) terminal of the camera.

Note

- While network streaming is in progress, the camera is always set to the movie recording mode regardless of the shooting mode before the start of streaming.
- You cannot do the following during network streaming.
  - Transition to the menu screen
  - Transition to the playback screen
  - FTP transfer
  - Remote shooting
  - Cloud Connection
  - Smartphone transfer
- The following functions are disabled while network streaming is running.
  - Power Save
  - Monitor Off
  - Monitor Low Bright
- When recording to recording media during network streaming, the following restrictions apply to the movie file format and recording frame rate.
  - If [Resolution] is set to [4K (2160p)] or [2K (1440p)], [File Format] cannot be set to [XAVC HS 4K].
  - [Rec Frame Rate] is the same as [Frame Rate] for the movie when outputting.
- You cannot change the [Movie Rec During Streaming] setting during network streaming.
- Depending on the temperature environment, output image quality setting for streaming, setting for movie recording during streaming, Wi-Fi connection environment, and usage conditions before the start of streaming, the internal temperature of the camera may rise, and the time available for streaming may become shorter.
- Depending on your network environment, the distributed video/audio may be disrupted. In that case, switch to a faster and more stable network or lower the setting for [Bit Rate].

- Depending on your internet connection or network conditions, streaming may be interrupted. In this case, restart streaming.
- To ensure secure streaming, the streaming URL must contain “rtmps://”.
  RTMP is used for general streaming but does not provide sufficient security, whereas RTMPS uses SSL/TLS to encrypt data and provide secure streaming.
- In SRT, you can select AES-128 or AES-256 as the encryption setting. This will encrypt streaming data and ensure secure delivery. It is possible to set [Encryption] to [None] in the SRT settings, but in this case, data will not be encrypted, and communications will not be secure. When selecting this setting, take into consideration the security requirements of the network environment and the delivery destination.
- The encryption settings of the SRT must match those of the destination. Setting the same encryption method as that used by the destination ensures proper communication.
- When using SRT, the passphrase and shared key are set in Creators' App. The types of characters that can be entered at this time are letters of the alphabet, numbers, and symbols. It is strongly recommended that the length be at least 16 characters.

About the RTMPS function

The RTMPS function supports a variety of encryption algorithms for secure RTMPS streaming. To ensure compatibility with a wide range of destination servers, several encryption algorithms are supported, including some that may not comply with current security best practices. For details, refer to the following website.
https://helpguide.sony.net/di/sftp/v1/h_zz/index.html

Related Topic

- Pairing the camera with a smartphone (Smartphone Connection)
- Importing root certification to the camera (Import Root Certificate)

TP1002156992

5-069-971-11(6) Copyright 2026 Sony Corporation

USB Streaming (movie)

S&Q

You can connect a computer, etc. to the camera and use the camera video and audio for livestreaming or web-conferencing services. Set the USB connection mode for the USB terminal to be used to [Sel. When Connect] or [USB Streaming] beforehand by selecting MENU → (Setup) → [USB] → [USB Cnct Mode (PORT1)] or [USB Cnct Mode (PORT2)].

1. **MENU → (Network) → [Streaming] → [USB Streaming] → Set [Output Res/Frame Rate] and [Movie Rec During Streaming].**

2. **Connect the camera to a computer or other device with a USB cable (commercially available).**

   [Streaming:Standby] will appear on the camera screen, and the camera will switch to the streaming standby state.

   - If the USB connection mode is set to [Sel. When Connect], select [Live Stream(USB Streaming)] on the selection screen for the USB connection mode.
   - Use a cable or adapter that matches the terminal on the device to be connected.

3. **Start streaming from your livestreaming/web-conferencing service.**

   [Streaming:Output] will appear on the camera screen.

   - To exit USB Streaming, disconnect the USB cable.

Menu item details

Output Res/Frame Rate:
Sets the resolution and the frame rate of the video. ([4K(2160p) 30p]/[4K(2160p) 25p]/[4K(2160p) 15p]/[4K(2160p)12.5p]/[HD(1080p) 60p]/[HD(1080p) 50p]/[HD(1080p) 30p]/[HD(1080p) 25p]/[HD(720p) 30p]/[HD(720p) 25p])

Movie Rec During Streaming:
Sets whether or not to enable recording of the video to the recording media during streaming. ([Enable]/[Disable])

Hint

- If you assign the shutter speed, ISO sensitivity, etc. to the dial or control wheel or register them to the function menu, you can adjust these values even during USB streaming.
- The format of the streaming data is as follows.
  - Video format: MJPEG* or YUV420
    * When the resolution is set to HD (720p), only MJPEG is available.
  - Audio format: PCM, 48 kHz, 16 bit, 2 ch
- During USB streaming, power is supplied to the camera from the computer. If you want to consume as little computer power as possible, change the [USB Power Supply] setting to one that does not supply power to the camera.
- When using an external microphone, you can minimize deviations between your voice and the movements of your mouth by connecting the microphone to the (microphone) terminal of the camera.

Note

- While USB streaming is in progress, the camera is always set to the movie recording mode regardless of the position of the Still/Movie/S&Q dial.
- You cannot do the following while USB Streaming is running.
  - Transition to the playback screen
  - Network functions (Remote Shooting, FTP transfer, remote operation from a smartphone, Bluetooth function, etc.)
- The following functions are disabled while USB Streaming is running.
  - Picture Profile
  - Power Save
  - Monitor Off
  - Monitor Low Bright
- When performing USB streaming with a resolution of 4K (2160p) or HD (1080p), use the USB PORT 1 terminal of the camera and a computer that is compatible with SuperSpeed USB 5 Gbps (USB 3.2) and a commercially available USB cable. Even if the resolution is set to 4K (2160p) or HD (1080p), the actual output resolution will be HD (720p) when using the USB PORT 2 terminal of the camera or connected via the USB 2.0 standard.
- If you change the settings for the following items during USB streaming, the streaming screen may pause temporarily. You may also need to resume streaming from an application depending on the livestreaming service.
  - [Output Res/Frame Rate] or [Movie Rec During Streaming] under [USB Streaming]
  - [File Format]
  - [Auto Framing Settings]
- Depending on the temperature environment, streaming output image-quality settings, video recording settings during streaming, Wi-Fi connection environment, and usage conditions before starting streaming, the internal temperature of the camera may rise, and the streaming time may be shortened.

Related Topic

- USB Cnct Mode (PORT1)/USB Cnct Mode (PORT2)

TP1002154693

5-069-971-11(6) Copyright 2026 Sony Corporation

Interchangeable Lens Digital Camera
ILCE-7M5 α7V

Contents of this chapter

The following table of contents lists the features described in this chapter (“Customizing the camera”). From each item name, you can jump to the page describing the respective functions.

Customization features of the camera

Assigning frequently used functions to buttons and dials (Custom Key/Dial Set.)

Changing the function of the dial temporarily (My Dial Settings)

Registering and recalling camera settings

- Camera Set. Memory
- Recall Camera Setting
- Memory/Recall Media
- Registering shooting settings to a custom key (Reg. Custom Shoot Set)

Registering frequently used functions to the function menu

- Fn Menu Settings (still image/movie)
- Fn Menu Settings (playback)

Registering frequently used functions to My Menu

- Add Item
- Sort Item
- Delete Item
- Delete Page
- Delete All
- Display From My Menu

Separately adjusting the camera settings for still images and movies

- Different Set for Still/Mv

Customizing the functions of the ring/dial

- Av/Tv Rotate
- Function Ring(Lens)
- Lock Operation Parts

Using the shutter button when shooting movies

- REC w/ Shutter (movie)
- Adding Shot Marks with the shutter button (movies)

Monitor/viewfinder settings

- Select Finder/Monitor
- Monitor Flip Direction
- Vertical Display

- DISP (Screen Display) (still image)
- DISP (Screen Display) (movie)

TP1002161105

5-069-971-11(6) Copyright 2026 Sony Corporation

Customization features of the camera

The camera has various customization features such as registration of functions and shooting settings to custom keys. You can combine your preferred settings to customize the camera for easier operation.
For details on how to configure the settings and use them, refer to the page for each function.

Recalling frequently used functions quickly
Changing the shooting settings quickly according to the scene
Other customization features

Recalling frequently used functions quickly

Custom Key/Dial Set. / Custom Key/Dial Set. / Custom Key Setting

You can change the functions of the buttons including the Custom Buttons (C1 to C4) according to your preferences.
It is recommended that you assign frequently used functions to easily operable buttons so that you can call up the assigned functions simply by pressing the corresponding button.

Assignable buttons
For details, refer to “ Assigning frequently used functions to buttons and dials (Custom Key/Dial Set.) .”

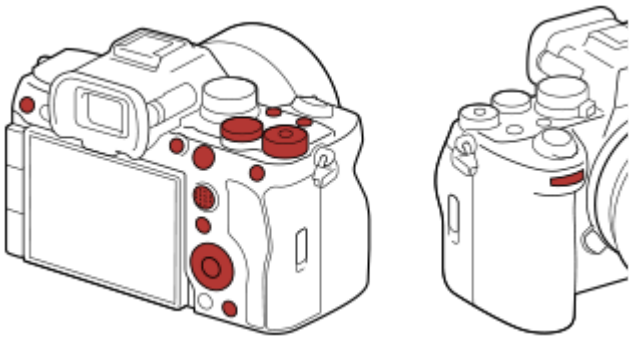

Function menu

If you register functions frequently used in the shooting mode or in the playback mode to the Function menu, you can display the registered functions on the screen simply by pressing the Fn (Function) button. On the Function menu screen, you can recall the function you want to use by selecting the icons.

The position of the Fn (Function) button and an example of the function menu

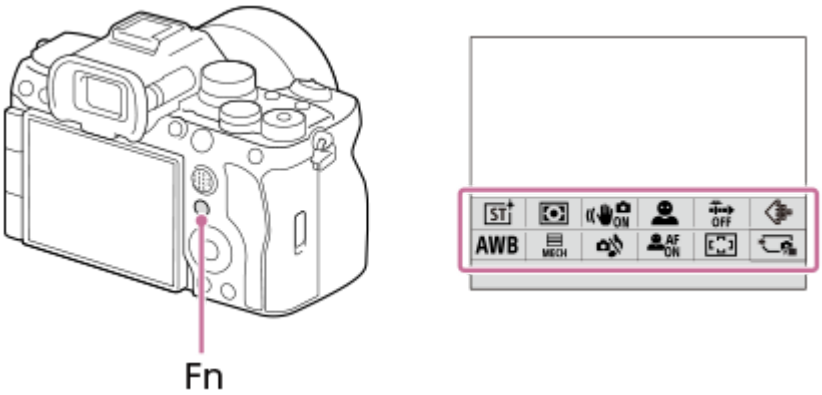

☆ My Menu

If you combine the frequently used items from menus such as the shooting and network menu on the “My Menu” screen, you can quickly access the desired menu items.
For details on how to create the “My Menu” screen, refer to “Add Item.”

- To display the “My Menu” screen just by pressing the MENU button, set MENU → ☆ (My Menu) → [My Menu Setting] → [Display From My Menu] to [On].

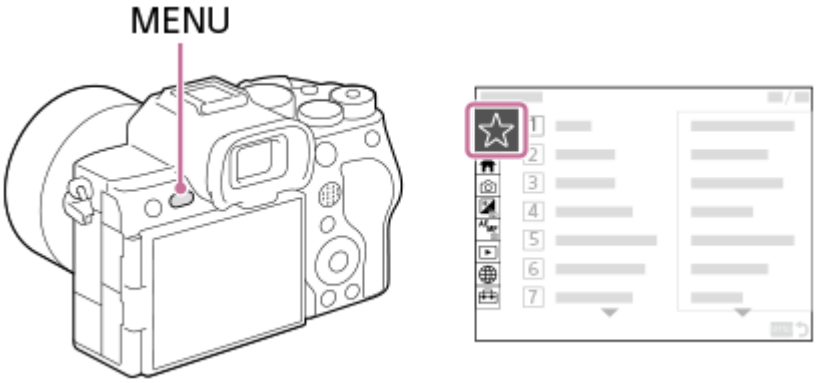

Changing the shooting settings quickly according to the scene

MR Camera Set. Memory

You can register the appropriate shooting settings* for scene to the camera or a memory card, and call up the settings easily by using the mode dial, etc.

* You cannot register custom key settings.

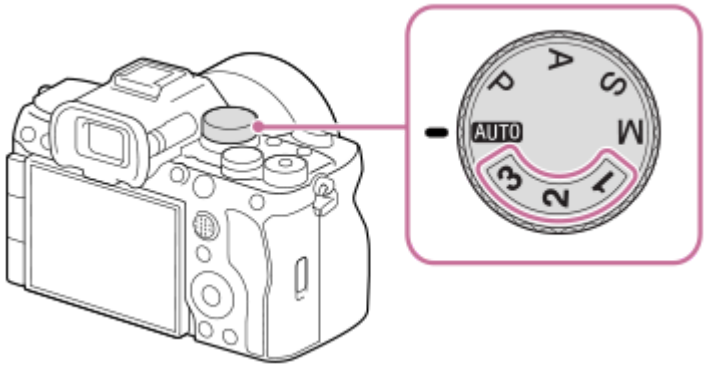

Other customization features

In addition to the above, you can further customize operability with the following features.

Reg. Custom Shoot Set

You can register shooting settings to buttons in advance and recall them temporarily while the button is pressed.
The setting can be changed instantly, and the original setting is restored when the button is released. This is convenient when shooting scenes where conditions change easily.

My Dial Settings

You can assign the desired functions to the front dial, rear dial L, rear dial R, and control wheel and register up to three combinations of settings to the camera as the “My Dial 1 - 3” settings.

Save/Load Settings

You can save camera settings* to a memory card using [Save/Load Settings]. This function is useful when you want to back up the settings, or to import the settings to another camera of the same model, etc.

* Some settings cannot be saved on a memory card.

Related Topic

- Assigning frequently used functions to buttons and dials (Custom Key/Dial Set.)
- Fn (function) button
- Add Item
- Camera Set. Memory
- Registering shooting settings to a custom key (Reg. Custom Shoot Set)
- Changing the function of the dial temporarily (My Dial Settings)
- Save/Load Settings

TP1002150269

5-069-971-11(6) Copyright 2026 Sony Corporation

Assigning frequently used functions to buttons and dials (Custom Key/Dial Set.)

You can use the custom key function to assign the functions you use most frequently to easily operable buttons and dials. This lets you skip the process of selecting items from MENU, so you can recall the functions more quickly.

You can separately assign functions to custom keys for the still image shooting mode, movie shooting mode, and playback mode.

- Assignable functions vary depending on the buttons or dials.

You can assign functions to the following buttons and dials.

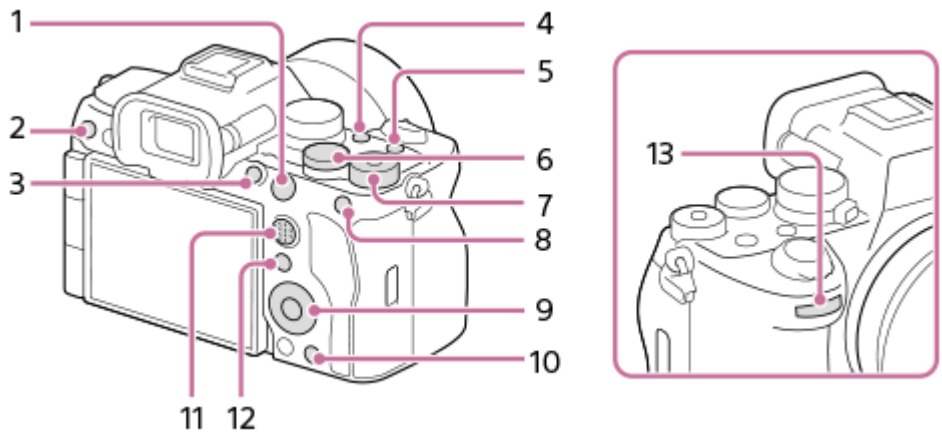

1. AF-ON Button
2. Custom Button 3
3. Custom Button 1
4. Custom Button 2
5. MOVIE Button
6. Rear Dial L
7. Rear Dial R
8. AEL Button
9. Control Wheel/Center Button/Left Button/Right Button/Down Button
10. Custom Button 4
11. Multi-Slc Center Btn
12. Fn Button
13. Front dial

The following is the procedure for assigning the [Subject Recognition AF] function to the AEL button.

1. **MENU → (Setup) → [Operation Customize] → [Custom Key/Dial Set.].**
   - If you want to assign a function to recall while shooting movies, select [Custom Key/Dial Set.]. If you want to assign a function to recall while playing back images, select [Custom Key Setting].
   - You can also select [Custom Key/Dial Set.] and [Custom Key/Dial Set.] from MENU → (Setup) → [Dial Customize].

2 **Move to the [Rear1] screen using the top/bottom side of the control wheel. Then, select [AEL Button] and press the center of the control wheel.**

3 **Select [Subject Recognition AF] using the top/bottom/left/right side of the control wheel, and then press the center.**

- If you press the AEL button while shooting and the subject is recognized, [Subject Recognition AF] will activate and the camera will focus on the subject. Shoot images while holding down the AEL button.

To use different functions for the dials/wheel depending on the shooting mode

If you add a check mark to [Separate M mode and other modes.] when assigning functions to the dials/wheel, you can assign different functions for [Manual Exposure] and the other exposure modes ([Intelligent Auto]/[Program Auto]/[Aperture Priority]/[Shutter Priority]).
If you add a check mark to [Separate Flexible Exp. and Intelligent Auto.] when assigning functions with [Custom Key/Dial Set.], you can assign different functions for [Flexible Exp. Mode] and [Intelligent Auto].

Hint

- By pressing a button to which a function can be assigned on the custom key setting screen, you can go to the setting screen for the pressed button (except for some buttons).
- You can also assign shooting functions to the focus hold button on the lens. However, some lenses do not have a focus hold button.

Related Topic

- Changing the function of the dial temporarily (My Dial Settings)

TP1002148555

5-069-971-11(6) Copyright 2026 Sony Corporation

Changing the function of the dial temporarily (My Dial Settings)

S&Q

You can assign the desired functions to the front dial, rear dial L, rear dial R, and control wheel and register up to three combinations of settings as “My Dial” settings. You can quickly recall or switch registered “My Dial” settings by pressing the custom key you assigned in advance.

Registering functions to “My Dial”

Register the functions that you want to assign to the front dial, rear dial L, rear dial R, and control wheel as [My Dial 1] through [My Dial 3].

1. MENU → (Setup) → [Dial Customize] → [My Dial Settings].
2. Select a dial or wheel for (My Dial 1), and press the center of the control wheel.
3. Select the desired function to assign using the top/bottom/left/right sides of the control wheel, and then press the center of the control wheel.
   - Select “--” (Not set) for a dial or wheel to which you do not want to assign any function.
4. After you select functions for all of the dials and the wheel in (My Dial 1) by repeating Steps 2 and 3, select [OK]. The settings for (My Dial 1) will be registered.
   - If you want to register (My Dial 2) and (My Dial 3) as well, follow the same procedure as described above.

Assigning a key to recall “My Dial”

Assign a custom key to recall the registered “My Dial” settings.

1. MENU → (Setup) → [Operation Customize] → [Custom Key/Dial Set.] or [Custom Key/Dial Set.] → Select the key that you want to use to recall “My Dial.”
2. Select the number of the “My Dial” setting that you want to recall or the pattern for switching “My Dial.”

Menu item details

My Dial 1 during Hold /My Dial 2 during Hold/My Dial 3 during Hold:
While you hold down the key, the functions that you registered in [My Dial Settings] are assigned to the dial/wheel.

My Dial 1→2→3 :
Each time you press the key, the function changes in the following sequence: “Normal function → Function of My Dial 1 → Function of My Dial 2 → Function of My Dial 3 → Normal function.”

Toggle My Dial 1 /Toggle My Dial 2/Toggle My Dial 3:
The function registered using [My Dial Settings] is maintained even if you do not hold down the key. Press the key again to return to the normal function.

Shooting while switching “My Dial”

During shooting, you can recall “My Dial” using the custom key and shoot as you change the shooting settings by turning the front dial, rear dial L, rear dial R, and control wheel.

In the following example, the functions listed below are registered to "My Dial," and [My Dial 1→2→3] is assigned to the C1 (Custom 1) button.

Operation part	My Dial 1	My Dial 2	My Dial 3
Front dial	Aperture	Creative Look	Move AF Frame ↔ : Std
Rear dial L	Shutter Speed	W Balance (C Temp)	Move AF Frame ↕ : Std
Rear dial R	Exposure Comp.	Focus Area	Move AF Frame ↔ : L
Control wheel	ISO	White Balance	Not set

1. Press the C1 (Custom1) button.
   The functions registered to [My Dial 1] will be assigned to the front dial, rear dial L, rear dial R, and control wheel.

   - The icons for the functions registered to [My Dial 1] are displayed in the lower part of the screen.

2. Turn the control wheel to set the ISO value, turn the front dial to set the aperture value, turn the rear dial L to set the shutter speed, and turn the rear dial R to set the exposure compensation.
3. Press the C1 button again. The functions registered to [My Dial 2] will be assigned to the front dial, rear dial L, rear dial R, and the control wheel.
4. Turn the control wheel to set [White Balance], turn the front dial to set [Creative Look], turn the rear dial L to set [W Balance (C Temp)], and turn the rear dial R to set [Focus Area].
5. Press the C1 button again, and change the setting values for the functions registered to [My Dial 3].

Note

- “My Dial” settings in which every dial/wheel is set to [Not set] are not recalled when you press the custom key. They are also skipped in [My Dial 1→2→3].
- Even if a dial/wheel has been locked using the [Lock Operation Parts] function, it will be unlocked temporarily when “My Dial” is recalled.

Related Topic

- Assigning frequently used functions to buttons and dials (Custom Key/Dial Set.)

TP1002149648

5-069-971-11(6) Copyright 2026 Sony Corporation

Camera Set. Memory

Allows you to register up to 3 often-used modes or product settings per shooting mode (Still/Movie/S&Q Motion/time-lapse movie) to the product and up to 4 (M1 through M4) to the memory card. You can recall the settings using just the mode dial.

1. **Set the product to the setting you want to register.**
2. **MENU → / (Shooting) → [Shooting Mode] → [MR Camera Set. Memory] → desired number.**
3. **Press the center of the control wheel to confirm.**

Items that can be registered

- You can register various functions for shooting. The items that can actually be registered are displayed on the menu of the camera.
- Aperture (F number)
- Shutter speed

To change registered settings

Change the setting to the desired one and re-register the setting to the same mode number.

Note

- M1 through M4 can be selected only when a memory card is inserted into the product.
- When registering the settings on a memory card, only a memory card that has been selected using [MR Memory/Recall Media] can be used.
- Program Shift cannot be registered.

Related Topic

- Recall Camera Setting
- Memory/Recall Media

TP1002110572

5-069-971-11(6) Copyright 2026 Sony Corporation

Recall Camera Setting

S&Q

Allows you to shoot an image after recalling your preferred shooting settings registered with [MR Camera Set. Memory].

1. **Set the camera to the desired shooting mode using the Still/Movie/S&Q dial.**

2. **Set the mode dial to 1, 2, or 3 (MR Recall Camera Setting).**
   - To recall settings registered to the memory card, select MENU → / (Shooting) → [Shooting Mode] → [MR Recall Camera Setting] and select the desired number.

Hint

- If you recall settings registered to the memory card, the settings are recalled from the memory card in the slot specified in [MR Memory/Recall Media]. You can confirm the memory card slot by selecting MENU → / (Shooting) → [Shooting Mode] → [MR Memory/Recall Media].
- Settings registered to a memory card using another camera of the same model name can be recalled with this camera.

Note

- If you set [MR Recall Camera Setting] after completing the shooting settings, the registered settings are given priority and the original settings may become invalid. Check the indicators on the screen before shooting.
- If the slot to which images are recorded is set to change, the shooting settings will not be applied until writing to the memory card is complete even when the mode dial is set to 1/2/3.

Related Topic

- Camera Set. Memory
- Memory/Recall Media

TP1002110500

5-069-971-11(6) Copyright 2026 Sony Corporation

Memory/Recall Media

Selects the memory card slot from which settings are recalled or to which settings are registered for M1 through M4.

1. **MENU → / (Shooting) → [Shooting Mode] → [MR Memory/Recall Media] → desired slot.**

Menu item details

Slot 1:
Selects the slot 1.

Slot 2:
Selects the slot 2.

Related Topic

- Camera Set. Memory
- Recall Camera Setting

TP1002148554

5-069-971-11(6) Copyright 2026 Sony Corporation

Registering shooting settings to a custom key (Reg. Custom Shoot Set)

You can register shooting settings (such as exposure, focus setting, drive mode, etc.) to a custom key in advance and temporarily recall them while holding down the key. Simply press the custom key to switch the settings quickly and release the key to go back to the original settings. This function is useful when recording active scenes such as sports.

1. **MENU → (Shooting) → [Shooting Mode] → [Reg. Custom Shoot Set] → Select a registration number from [Recall Custom hold 1] to [Recall Custom hold 3].**

   The setting screen for the selected number will be displayed.

2. **Using the top/bottom/left/right side of the control wheel, select the check boxes for the functions that you want to recall with one of the registration numbers and press the center to check each box.**

   A ✓ (check) mark will be displayed in the boxes for the functions.
   - To cancel a selection, press the center again.

3. **Select the function that you want to adjust using the top/bottom/left/right side of the control wheel, and press the center to adjust the function to the desired setting.**
   - Select [Import Current Setting] to register the current settings of the camera to the registration number that you chose.

4. **Select [Register].**

Items that can be registered

- You can register various functions for shooting. The items that can actually be registered are displayed on the menu of the camera.
- Exposure
- Focus setting
- Drive mode (other than self-timer)
- Cnt Shoot Speed Boost *
- Shutter Type

* When recalling [Cnt Shoot Speed Boost], the drive mode is not recalled.
* When [Cnt Shoot Speed Boost] is set to a value other than [Off], [Shutter Type] cannot be set.
* The continuous shooting speed for [Cnt Shoot Speed Boost] can be set separately from [Cnt Sht Spd Bst Settings].

To recall registered settings

1. MENU → (Setup) → [Operation Customize] → [Custom Key/Dial Set.] → Select the desired key and then select one of the registration numbers from [Recall Custom hold 1] to [Recall Custom hold 3].
2. On the shooting screen, press the shutter button while holding down the key to which you assigned one of the registration numbers.
   The registered settings are activated while you are holding down the custom key.

Hint

- You can change the settings for [Reg. Custom Shoot Set] after assigning one of the registration numbers to the custom key using [Custom Key/Dial Set.].

Note

- The registration numbers [Recall Custom hold 1] through [Recall Custom hold 3] are available only when the shooting mode is set to P/A/S/M.
- Depending on the attached lens and the status of the camera when the registered setting recall is executed, the registered settings may not take effect.

Related Topic

- Assigning frequently used functions to buttons and dials (Custom Key/Dial Set.)

TP1002147360

5-069-971-11(6) Copyright 2026 Sony Corporation

Interchangeable Lens Digital Camera
ILCE-7M5 α7V

Fn Menu Settings (still image/movie)

The Function menu is a menu of 12 functions that is displayed at the bottom of the screen when you press the Fn (Function) button.
You can register 12 functions to the Function menus for still image shooting and movie shooting, respectively.

The following is the procedure for changing [Creative Look] in the still image function menu to [Grid Line Display].

- To change the movie function menu, select a movie function menu item in Step 2.

1. **MENU → (Setup) → [Operation Customize] → select [Fn Menu Settings].**

2. **Select (Creative Look) from among the 12 still image function menu items using the top/bottom/left/right side of the control wheel, and then press the center.**

3. **Move to the screen showing [Grid Line Display] using the top/bottom/left/right side of the control wheel. Then, select [Grid Line Display] and press the center of the control wheel.**
   - (Grid Line Display) will be displayed in the former location of (Creative Look) in the Function menu.

Hint

- When [Touch Operation] is set to [On] and [Shooting Screen] in [Shooting Screen] under [Touch Panel Settings] is set to [On], you can also open [Fn Menu Settings] by holding down the icon in the function menu.

Related Topic

- Fn (function) button

TP1002151169

5-069-971-11(6) Copyright 2026 Sony Corporation

Fn Menu Settings (playback)

Sets the function menu for the playback mode. The Function menu is a menu of 12 functions that is displayed at the bottom of the screen when you press the Fn (Function) button.

The following is the procedure for changing [Send to Smartphone] to [Photo Capture].

1. **MENU → (Setup) → [Operation Customize] → [Fn Menu Settings].**

2. **Select (Send to Smartphone) from among the 12 function menu items using the top/bottom/left/right side of the control wheel, and then press the center.**

3. **Move to the screen showing [Photo Capture] using the top/bottom/left/right side of the control wheel. Then, select [Photo Capture] and press the center of the control wheel.**
   - (Photo Capture) will be displayed in the former location of (Send to Smartphone) in the Function menu.

Hint

- When [Touch Operation] is set to [On] and [Playback Screen] under [Touch Panel Settings] is set to [On], you can also open [Fn Menu Settings] by holding down the icon in the function menu.
- You can also assign the function to display the function menu during playback to a custom key. Assign [Function Menu] to the desired key in [Custom Key Setting]. You can also assign other functions to be activated when you press the Fn button in the playback mode.

Related Topic

- Fn (function) button

TP1002158466

5-069-971-11(6) Copyright 2026 Sony Corporation

Add Item

You can register the desired menu items to ☆ (My Menu) under MENU.

1. **MENU → ☆ (My Menu) → [My Menu Setting] → [Add Item].**
2. **Select an item that you want to add to ☆ (My Menu) using the top/bottom/left/right sides of the control wheel.**
3. **Select a destination using the top/bottom/left/right sides of the control wheel.**

To add menu items from the menu screen

You can add the menu item currently selected on the menu screen to ☆ (My Menu).

1. Press the 🗑 (Delete) button while the cursor is over the menu item that you want to add to ☆ (My Menu).
   The context menu will appear.
   - When [Touch Operation] is set to [On], you can display the context menu by touching and holding the menu item.
2. Select [Add to My Menu].
3. Select a destination using the top/bottom/left/right sides of the control wheel.

Hint

- You can add up to 42 items to ☆ (My Menu).

Note

- You cannot add the following items to ☆ (My Menu).
  – Any item under MENU → ▶ (Playback)

Related Topic

- Sort Item
- Delete Item
- MENU button

TP1002147362

5-069-971-11(6) Copyright 2026 Sony Corporation

Sort Item

You can rearrange the menu items added to ☆ (My Menu) under MENU.

1. **MENU → ☆ (My Menu) → [My Menu Setting] → [Sort Item].**
2. **Select an item that you want to move using the top/bottom/left/right sides of the control wheel.**
3. **Select a destination using the top/bottom/left/right sides of the control wheel.**

Related Topic

- Add Item

TP1002147363

5-069-971-11(6) Copyright 2026 Sony Corporation

Delete Item

You can delete menu items added to ☆ (My Menu) of MENU.

1. **MENU → ☆ (My Menu) → [My Menu Setting] → [Delete Item].**
2. **Select an item that you want to delete using the top/bottom/left/right sides of the control wheel, and then press the center to delete the selected item.**

Hint

- To delete all the items on a page, select MENU → ☆ (My Menu) → [My Menu Setting] → [Delete Page].
- You can delete all the items added to ☆ (My Menu) by selecting MENU → ☆ (My Menu) → [My Menu Setting] → [Delete All].

Related Topic

- Delete Page
- Delete All
- Add Item

TP1002147364

5-069-971-11(6) Copyright 2026 Sony Corporation

Delete Page

You can delete all the menu items added to a page under ☆ (My Menu) in MENU.

1. **MENU → ☆ (My Menu) → [My Menu Setting] → [Delete Page].**
2. **Select a page that you want to delete using the top/bottom sides of the control wheel, and then press the center of the control wheel to delete the items.**

Related Topic

- Delete All
- Add Item

TP1002147365

5-069-971-11(6) Copyright 2026 Sony Corporation

Delete All

You can delete all the menu items added to ☆ (My Menu) in MENU.

1. **MENU → ☆ (My Menu) → [My Menu Setting] → [Delete All].**
2. **Select [OK].**

Related Topic

- Delete Page
- Add Item

TP1002147366

5-069-971-11(6) Copyright 2026 Sony Corporation

Display From My Menu

You can set My Menu to appear first when you press the MENU button.

1. **MENU → ☆ (My Menu) → [My Menu Setting] → [Display From My Menu] → desired setting.**

Menu item details

On:
My Menu appears first when you press the MENU button.

Off:
The most recently displayed menu appears when you press the MENU button.

Related Topic

- Add Item
- MENU button

TP1002150250

5-069-971-11(6) Copyright 2026 Sony Corporation

Different Set for Still/Mv

For each item in still image shooting and movie recording, you can select whether to use a common setting or separate settings.

1. **MENU → (Setup) → [Operation Customize] → Select [Different Set for Still/Mv].**

   The operation guide screen will appear. Select [OK] to display the setting screen.

2. **Add check marks to the items that you want to set separately for still image shooting and movie recording, and then select [OK].**

   - You can set the following items separately for still image shooting and movie recording.
     - Aperture
     - Shutter Speed
     - ISO
     - Exposure Comp.
     - Metering Mode
     - White Balance
     - Picture Profile
     - Focus Mode

Hint

- When you switch from a common setting to separate settings with [Different Set for Still/Mv], the current settings are applied to both still image shooting and movie recording. However, the custom white balance setting is only applied to still image shooting.
- When you switch from separate settings to a common setting with [Different Set for Still/Mv], the setting values of items return to their initial values. As an exception, the setting values for still image shooting are applied to the aperture value, shutter speed, and custom white balance settings.

TP1002151170

5-069-971-11(6) Copyright 2026 Sony Corporation

Interchangeable Lens Digital Camera
ILCE-7M5 α7V

Av/Tv Rotate

Sets the direction of rotation for the front dial, rear dial L, rear dial R, or control wheel when changing the aperture value or shutter speed.

1. **MENU → (Setup) → [Dial Customize] → [Av/Tv Rotate] → desired setting.**

Menu item details

Normal:
Does not change the direction of rotation for the front dial, rear dial L, rear dial R, or control wheel.

Reverse:
Reverses the direction of rotation for the front dial, rear dial L, rear dial R, or control wheel.

TP1002148556

5-069-971-11(6) Copyright 2026 Sony Corporation

Function Ring(Lens)

S&Q

Sets the function to assign to the function ring on the lens (available only with lenses equipped with a function ring).

For details, refer to the operating instructions supplied with the lens.

1. **MENU → (Setup) → [Dial Customize] → [Function Ring(Lens)]→ desired setting.**

Menu item details

Power Focus:
The focusing position moves toward infinity when you turn the function ring to the right. The focusing position moves to the closer range when you turn the function ring to the left.

APS-C S35 **/Full Frame:**
The angle of view switches between full frame and APS-C/Super 35 mm when the function ring is turned.

- The angle of view switches regardless of the direction in which you turn the function ring.

Preset Focus:
Registers the focus position and zoom position by moving and holding the function ring on the lens on the shooting screen and recalls them by briefly flicking the function ring on the lens.

- You can register or recall the positions regardless of the direction in which you turn the function ring.

Related Topic

- APS-C S35 (Super 35mm) Shooting (still image/movie)
- Preset Focus/Zoom

TP1002149649

5-069-971-11(6) Copyright 2026 Sony Corporation

Lock Operation Parts

S&Q

You can set whether the multi-selector, dials, and wheel can be locked by pressing and holding down the Fn (Function) button.

1. **MENU → (Setup) → [Dial Customize] → [Lock Operation Parts] → desired setting.**
   - To lock the operating parts, hold down the Fn (Function) button until the message “Locked.” appears on the monitor.

Menu item details

Off:
Does not lock the multi-selector, front dial, rear dial, or control wheel even if you press and hold down the Fn (Function) button.

Multi-Selector Only:
Locks the multi-selector.

Dial + Wheel:
Locks the front dial, rear dial L, rear dial R, and control wheel.

All:
Locks the multi-selector, front dial, rear dial L, rear dial R and control wheel.

Hint

- You can release the lock by holding the Fn (Function) button down again.
- You can lock all buttons, dials, and wheels except the shutter button by pressing and holding the MENU button and the Fn (Function) button simultaneously for 5 seconds. Press and hold the MENU button and the Fn button simultaneously for 5 seconds again to release the lock.

Note

- If you set [AF Area Registration] to [On], [Lock Operation Parts] will be fixed to [Off].

Related Topic

- Registering the current focus area (AF Area Registration)

TP1002147361

5-069-971-11(6) Copyright 2026 Sony Corporation

REC w/ Shutter (movie)

You can start or stop recording movies by pressing the shutter button, which is bigger and easier to press than the MOVIE (Movie) button.

1. **MENU → (Setup) → [Operation Customize] → [REC w/ Shutter] → desired setting.**

Menu item details

On:
Enables movie recording using the shutter button when the shooting mode is set to [Movie], [S&Q Motion], or [Time-lapse].

Off:
Disables movie recording using the shutter button.

Hint

- When [REC w/ Shutter] is set to [On], you can use the shutter button to start or stop recording movies on an external recording/playback device using [REC Control].

Note

- When [REC w/ Shutter] is set to [On], you cannot focus by pressing the shutter button halfway down during movie recording.

Related Topic

- Shooting movies (Intelligent Auto)

TP1002147355

5-069-971-11(6) Copyright 2026 Sony Corporation

Adding Shot Marks with the shutter button (movies)

By pressing the shutter button deeply down while recording a movie, you can add a Shot Mark to the movie frame at the time the shutter button was pressed. The Shot Mark can be used to automatically create a still image from a scene in a movie.

1. **MENU → (Setup) → [Operation Customize] → [with Shutter Button] → desired setting.**

Menu item details

Add Shot Mark1:
While recording a movie, press the shutter button to add Shot Mark 1 to the movie frame.

Add Shot Mark2:
While recording a movie, press the shutter button to add Shot Mark 2 to the movie frame.

Do not add:
Does not add a Shot Mark by pressing the shutter button.

Note

- If [with Shutter Button] is set to add Shot Marks by pressing the shutter button, focusing will not be performed by pressing the shutter button halfway down.
- When [REC w/ Shutter] is set to [On], [with Shutter Button] becomes locked to [Do not add].

Related Topic

- Automatic creation of still images from Shot Marks
- REC w/ Shutter (movie)

TP1002160263

5-069-971-11(6) Copyright 2026 Sony Corporation

Select Finder/Monitor

S&Q

Sets the method for switching the display between the viewfinder and the monitor.

1. **MENU → (Setup) → [Finder/Monitor] → [Select Finder/Monitor] → desired setting.**

Menu item details

Auto: 1:
When you look into the viewfinder, the display is switched to the viewfinder automatically.

The eye sensor is deactivated and the display does not switch to the viewfinder depending on whether the monitor is open or closed and the angle of the monitor.

Auto: 2:
When you look into the viewfinder, the display is switched to the viewfinder automatically.

The eye sensor is always activated and the display switches to the viewfinder regardless of whether the monitor is open or closed and the angle of the monitor.

VF(Manual):
The monitor is turned off and the image is displayed only in the viewfinder.

Monitor(Manual):
The viewfinder is turned off and the image is always displayed on the monitor.

Hint

- You can assign the [Select Finder/Monitor] function to your preferred key.
  [Custom Key/Dial Set.], [Custom Key/Dial Set.] or [Custom Key Setting] → set [Finder/Monitor Sel.] to the preferred key.
- If you want to retain the viewfinder display or the monitor display, set [Select Finder/Monitor] to [VF(Manual)] or [Monitor(Manual)] beforehand.
  You can keep the monitor off when you take your eyes off the viewfinder during recording by setting the monitor display to [Monitor Off] using the DISP button. Select [DISP (Screen Display)]/[DISP (Screen Display)] → [Monitor] and add a check mark to [Monitor Off] beforehand.
- When [Enlarge Menu Scrn] under [Enlarge Screen] is set to anything other than [Off], a message is displayed confirming whether to set [Select Finder/Monitor] to [Monitor(Manual)]. When using the [Enlarge Screen] function, it is recommended that you set [Select Finder/Monitor] to [Monitor(Manual)]. This will prevent the eye sensor from activating and switching to the viewfinder display when you bring your face close to the monitor.

Note

- Under strong light sources such as sunlight, the eye sensor may not detect your eye approaching and the display may not switch to the viewfinder even when [Select Finder/Monitor] is set to [Auto: 1] or [Auto: 2]. In such cases, keep the eye sensor from being exposed to the light source.
- When [Auto: 2] is selected, the eye sensor may be activated and the monitor turned off unintentionally by covering the eye sensor with the monitor or your hands. In this case, select [Auto: 1] or [Monitor(Manual)].

Related Topic

- Assigning frequently used functions to buttons and dials (Custom Key/Dial Set.)
- DISP (Screen Display) (still image)
- DISP (Screen Display) (movie)
- Enlarge Screen

TP1002110600

5-069-971-11(6) Copyright 2026 Sony Corporation

Monitor Flip Direction

The direction of image and menu screen displays can be inverted according to the camera orientation and the monitor angle/orientation.

1. **MENU → (Setup) → [Finder/Monitor] → [Monitor Flip Direction] → desired setting.**
2. **Adjust the camera orientation and the monitor angle/orientation to the desired position.**
3. **Select the desired setting while checking the monitor.**

Menu item details

Auto:
Inverts the direction of the monitor display by detecting the camera orientation and the monitor angle/orientation.

Mirror Flip:
Flips the monitor display around the shorter edge.

180 Degree Flip:
Rotates the monitor display 180 degrees.

No Flip:
Does not invert the display of the monitor.

Hint

- By repeatedly pressing the key to which the [Switch Monitor Flip Disp] function is assigned, you can switch the setting in the order of [Mirror Flip] → [180 Degree Flip] → [No Flip] → [Mirror Flip]. When [Monitor Flip Direction] is set to [Auto], the display method is temporarily switched while the setting value remains [Auto].

Note

- Even if [Monitor Flip Direction] is set to [Mirror Flip], the direction of the monitor display during playback will not be inverted.
- The setting for [Monitor Flip Direction] is not applied to the viewfinder display.

TP1002154694

5-069-971-11(6) Copyright 2026 Sony Corporation

Vertical Display

S&Q

Sets whether or not to automatically rotate the information display when you hold the camera vertically. This setting applies to both the monitor and the viewfinder.

1. **MENU → (Setup) → [Finder/Monitor] → [Vertical Display] → desired setting.**

Menu item details

On:
Rotates the information display according to the camera orientation.
Off:
Does not rotate the information display regardless of the camera orientation.

About the vertical information display

During vertical display, the same information is provided as on the horizontal shooting screen, and it is arranged to match the orientation of the monitor.
Monitor

Viewfinder

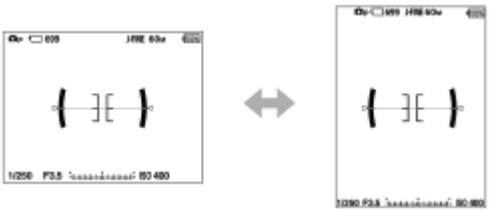

About the controls during vertical display

During vertical display, the direction of the top/bottom/left/right side of the control wheel and the touch operations are also rotated to match the orientation of the monitor so that intuitive operation is possible.
The functions assigned to the top/bottom/left/right side of the control wheel using [Custom Key/Dial Set.] or [Custom Key/Dial Set.] will not rotate during vertical display.

Hint

- You can set the information to be displayed on the screen using [DISP (Screen Display)]/[DISP (Screen Display)], and the display mode can be switched by pressing the DISP (Display Setting) button.
- During vertical display, information such as the exposure value will be hidden after a certain period of time if the screen display mode is set to the following and [Exposure: TimeOut] is set.
  - [Monitor]: [No Disp. Info.]
  - [Finder]: [No Disp. Info.]/[Histogram]/[Level]/[Histogram&Level]
- During vertical display, the touch function icons displayed on the left and right sides of the screen will also be arranged to match the screen orientation.

Note

- The orientation of the camera cannot be detected when the lens is facing up or down.

Related Topic

- DISP (Screen Display) (still image)
- DISP (Screen Display) (movie)
- DISP (Display Setting) button

TP1002161099

5-069-971-11(6) Copyright 2026 Sony Corporation

DISP (Screen Display) (still image)

Allows you to set the screen display modes that can be selected using DISP (Display Setting) when shooting still images.

1. **MENU → (Setup) → [Operation Customize] → [DISP (Screen Display)] → [Monitor] or [Finder] → desired setting → [Enter].**

   The items marked with ✓ (check) are available.

Menu item details

Display All Info.:
Shows recording information.

No Disp. Info.:
Does not show recording information.

Histogram:
Displays the luminance distribution graphically.

Level:
Indicates whether the product is level in both the front-back **(A)** and horizontal **(B)** directions. When the product is level in either direction, the indicator turns to green. (The level does not work when the lens is facing right up or right down.)

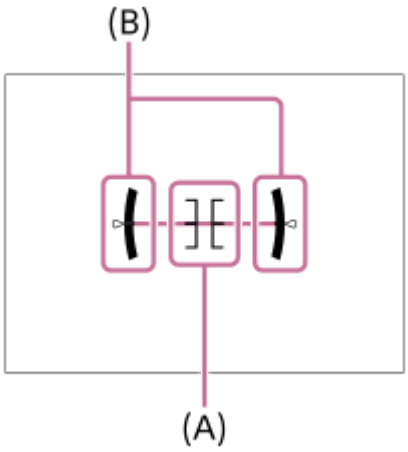

Histogram&Level:
Displays the histogram and the level gauge.

For viewfinder [*1]:
Displays only shooting information on the monitor, not the subject. This setting is a display setting for shooting with the viewfinder.

Monitor Off [*1]:
Always turns the monitor off when shooting images. You can use the monitor when playing back images or operating MENU. This setting is a display setting for shooting with the viewfinder.

Custom 1/Custom 2/Custom 3 [*2]:
You can customize the shooting information displayed in the viewfinder.

*1 These screen modes are available only in the setting for [Monitor].
*2 These screen modes are available only in the setting for [Finder].

To hide exposure information after a certain period of time

You can set whether to always display exposure information ([Exposure: On]) or to hide exposure information after a certain period of time has elapsed from the last operation of the shutter button, etc. ([Exposure: TimeOut]) for the following screen displays.

- No Disp. Info.
- Histogram (only when setting for [Finder])
- Level (only when setting for [Finder])
- Histogram&Level (only when setting for [Finder])

The [Exposure: TimeOut] setting is available when exposure information is superimposed on the image displayed on the monitor or viewfinder (except when shooting with the viewfinder while the information is not displayed vertically).

To customize the shooting information displayed in the viewfinder

By using [Custom 1]/[Custom 2]/[Custom 3], you can customize the display for the viewfinder.
Select (Edit) and then customize the shooting information display to your preferences.

Exposure: On:
Always displays exposure information.

Exposure: TimeOut:
Hides information such as the exposure value after a certain period of time has elapsed from the last operation of the shutter button, etc. when shooting images during vertical display.

Histogram:
Displays the histogram.

Level:
Displays the level gauge.

Footer Custom:
You can customize the shooting information displayed in the footer. Up to 5 desired items of shooting information can be displayed in the footer.

- Select (Edit) and then set the desired items and their positions.

Note

- If you tilt the product forward or backward by a large degree, the level error will be great.
- The product may have a margin of error of almost ±1° even when the inclination is corrected by the level.

Related Topic

- DISP (Display Setting) button

TP1002161100

5-069-971-11(6) Copyright 2026 Sony Corporation

DISP (Screen Display) (movie)

Allows you to set the screen display modes that can be selected using DISP (Display Setting) when shooting movies.

1. **MENU → (Setup) → [Operation Customize] → [DISP (Screen Display)] → [Monitor] or [Finder] → desired setting → [Enter].**

   The items marked with ✓ (check) are available.

Menu item details

Display All Info.:
Shows recording information.

No Disp. Info.:
Does not show recording information.

Histogram:
Displays the luminance distribution graphically.

Level:
Indicates whether the product is level in both the front-back **(A)** and horizontal **(B)** directions. When the product is level in either direction, the indicator turns to green. (The level does not work when the lens is facing right up or right down.)

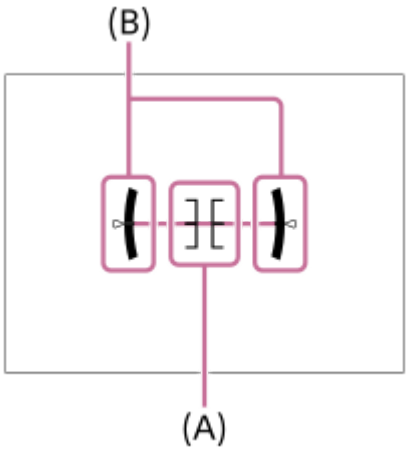

Histogram&Level:
Displays the histogram and the level gauge.

Monitor Off*:
Always turns the monitor off when shooting images. You can use the monitor when playing back images or operating MENU. This setting is a display setting for shooting with the viewfinder.

* These screen modes are available only in the setting for [Monitor].

To hide exposure information after a certain period of time during vertical display

You can set whether to always display information such as exposure values during vertical display ([Exposure: On]) or to hide the information after a certain period of time has elapsed from the last operation of the shutter button, etc. ([Exposure: TimeOut]) for the following screen displays.

- No Disp. Info.
- Histogram (only when setting for [Finder])
- Level (only when setting for [Finder])
- Histogram&Level (only when setting for [Finder])

Note

- If you tilt the product forward or backward by a large degree, the level error will be great.
- The product may have a margin of error of almost ±1° even when the inclination is corrected by the level.

Related Topic

- DISP (Display Setting) button

TP1002161101

5-069-971-11(6) Copyright 2026 Sony Corporation

Contents of this chapter

The following table of contents lists the features described in this chapter (“Viewing”). From each item name, you can jump to the page describing the respective functions.

Viewing images

- Play Set of Multi. Media
- Disp Set of Multi Media
- Playing back still images
- Enlarging an image being played back (Enlarge Image)
- Enlarge Initial Mag.
- Enlarge Initial Position
- Rotating recorded images automatically (Display Rotation)
- Playing back movies
- Playback/Monitor. Vol.
- 4ch Audio Monitoring (movie)
- Playing back images using slideshow (Slide Show)
- Cont. Play for Interval
- Play Speed for Interval

Changing how images are displayed

- Playing back images on the image index screen (Image Index)
- Playback Filter Condition
- Image Order
- Display as Group
- Focus Frame Display (playback)
- Aspect Marker Disp. (still image)
- Disp Specified Time Img.

Setting the method for jumping between images (Image Jump Setting)

Protecting recorded images (Protect)

Adding information to images

- Rating
- Rating Set(Custom Key)
- Clip Flag
- Rotating an image (Rotate)

Crop

Extracting still images from a movie

- Photo Capture
- Creating still images from Shot Marks
- Shot Marks after still image creation (playback)
- JPEG/HEIF Switch (Photo Capture / Creating still images from Shot Marks)

Copying images from one memory card to another (Copy)

Deleting images

- Deleting multiple selected images (Delete)
- Delete pressing twice
- Delete confirm.
- Delete Slot1/2
- Initial Pos. When Exec

Viewing images on a TV

- Viewing images on a TV using an HDMI cable

TP1002161106

5-069-971-11(6) Copyright 2026 Sony Corporation

Play Set of Multi. Media

Sets the memory card slot to play back when memory cards are inserted into both Slot 1 and Slot 2.

1. **MENU → ▶ (Playback) → [Playback Target] → [Play Set of Multi. Media] → desired setting.**

Menu item details

Slot 1:
Selects Slot 1.

Slot 2:
Selects Slot 2.

Hint

- When only one memory card is inserted into the camera, the playback target is automatically set to the slot into which the memory card is inserted.
- If [Disp Set of Multi Media] is set to [All Slots], the playback target will be the memory cards in all slots. To play back only the memory card in the slot set in [Play Set of Multi. Media], set [Disp Set of Multi Media] to [Follow PB Settings].

Related Topic

- Disp Set of Multi Media

TP1002158470

5-069-971-11(6) Copyright 2026 Sony Corporation

Disp Set of Multi Media

Sets whether to display images from all memory card slots or from the slot selected in [Play Set of Multi. Media] when memory cards are inserted into both Slot 1 and Slot 2.

1. **MENU → (Playback) → [Playback Target] → [Disp Set of Multi Media] → desired setting.**

Menu item details

All Slots:
Displays images on memory cards in all slots.

Follow PB Settings:
Displays images on the memory card in the slot selected in [Play Set of Multi. Media].

Related Topic

- Play Set of Multi. Media

TP1002160267

5-069-971-11(6) Copyright 2026 Sony Corporation

Playing back still images

Plays back the recorded images.

1. **Select MENU → ▶ (Playback) → [Playback Target] → [Play Set of Multi. Media] to choose which memory card slot to play back.**
   - When only one memory card is inserted into the camera, it is not necessary to set [Play Set of Multi. Media].
   - If [Disp Set of Multi Media] is set to [All Slots], the playback target will be the memory cards in all slots.

2. **Press the ▶ (Playback) button to switch to the playback mode.**

   You can touch ▶ (Playback) on the screen to switch to the playback mode.
   If the touch function icons are not displayed, swipe left or right on the monitor to display them.
   For details, refer to "Touch function icons."

3. **Select the image with the control wheel.**
   - When [Display as Group] is set to [On], images shot with continuous shooting or interval shooting are displayed as one group. To play back the images in the group, press the center of the control wheel.

Hint

- The product creates an image database file on a memory card to record and play back images. An image that is not registered in the image database file may not be played back correctly. To play back images shot using other devices, register those images to the image database file using MENU → 📷/▶■ (Shooting) → [Media] → [Recover Image DB].
- If you play back the images right after continuous shooting, the monitor may display an icon indicating that data is being written/the number of images left to write. During writing, some functions are not available.
- You can move to the previous/next image or group by pressing the left/right side of the control wheel even while an image in the group is being played back. In this case, the icon that indicates moving across a group is displayed.
- When [▶ Focus Frame Display] is set to [On], the focus frame at the time of shooting is displayed over played-back images. The focus frame that the camera used to focus during shooting is displayed in green. Even if multiple focus frames are displayed during shooting, only the one on which the camera actually tried to focus will be displayed during playback.
- When [Aspect Marker Disp.] is set to [On], the aspect marker that was displayed during shooting can also be displayed over the played-back image.

Note

- If the camera is connected to a TV or monitor, etc. via an HDMI cable, the playback screen will not be displayed in the viewfinder.

Related Topic

- Play Set of Multi. Media
- Disp Set of Multi Media
- Recover Image DB (still image/movie)
- Display as Group

- Focus Frame Display (playback)
- Enlarging an image being played back (Enlarge Image)
- Touch function icons

TP1002110611

5-069-971-11(6) Copyright 2026 Sony Corporation

Enlarging an image being played back (Enlarge Image)

Enlarges the still image being played back. Use this function to check the focus of the image, etc.

1. **Display the image you want to enlarge, and then press the (Enlarge Image) button.**
   - Turn the control wheel to adjust the zoom scale. By rotating the front dial/rear dial L/rear dial R, you can switch to the previous or next image while keeping the same zoom scale.
   - The view will zoom in on the part of the image where the camera focused during shooting. If the focus location information cannot be obtained, the camera will zoom in on the center of the image.
2. **Select the portion you want to enlarge by pressing the top/bottom/right/left sides of the control wheel.**
3. **Press the MENU button or the center of the control wheel to exit the playback zoom.**

Hint

- You can also enlarge an image being played back using MENU.
- You can change the initial magnification and initial position of enlarged images by selecting MENU → (Playback) → [Magnification] → [Enlarge Initial Mag.] or [Enlarge Initial Position].
- You can also enlarge the image by touching the monitor. Drag the monitor to move the enlarged position. Set [Touch Operation] to [On] and [Playback Screen] under [Touch Panel Settings] to [On] beforehand.

Related Topic

- Enlarge Initial Mag.
- Enlarge Initial Position
- Touch Operation
- Touch Panel Settings

TP1002134070

5-069-971-11(6) Copyright 2026 Sony Corporation

Enlarge Initial Mag.

Sets the initial magnification scale when playing back enlarged images.

1. **MENU → ▶ (Playback) → [Magnification] → [Enlarge Initial Mag.] → desired setting.**

Menu item details

Standard. Mag.:
Displays an image with the standard magnification.

Previous Mag.:
Displays an image with the previous magnification. The previous magnification is stored even after the enlarged display screen is closed.

Related Topic

- Enlarging an image being played back (Enlarge Image)
- Enlarge Initial Position

TP1002142802

5-069-971-11(6) Copyright 2026 Sony Corporation

Enlarge Initial Position

Sets the initial position when enlarging an image in playback.

1. **MENU → (Playback) → [Magnification] → [Enlarge Initial Position] → desired setting.**

Menu item details

Focused Position:
Enlarges the image from the point of focus during shooting.
Center:
Enlarges the image from the center of the screen.

Related Topic

- Enlarging an image being played back (Enlarge Image)
- Enlarge Initial Mag.

TP1002142791

5-069-971-11(6) Copyright 2026 Sony Corporation

Rotating recorded images automatically (Display Rotation)

Selects the orientation when playing back recorded images.

1. **MENU → ▶ (Playback) → [Playback Option] → [Display Rotation] → desired setting.**

Menu item details

Auto:
When you rotate the camera, the camera detects the vertical and horizontal directions, and displays the image being played back according to the orientation.

Manual:
Images shot vertically are displayed vertically. If you have set the image orientation using the [Rotate] function, the image will be displayed accordingly.

Off:
Images are always displayed horizontally.

Note

- Movies shot vertically are played back horizontally during movie playback.

Related Topic

- Rotating an image (Rotate)

TP1002110621

5-069-971-11(6) Copyright 2026 Sony Corporation

Playing back movies

Plays back the recorded movies.

1. **Select the slot of the memory card to be played back from MENU → ▶ (Playback) → [Playback Target] → [Play Set of Multi. Media].**
   - When only one memory card is inserted into the camera, it is not necessary to set [Play Set of Multi. Media].
   - If [Disp Set of Multi Media] is set to [All Slots], the playback target will be the memory cards in all slots.
2. **Press the ▶ (playback) button to switch to playback mode.**
3. **Select the movie to be played back using the control wheel and press the center of the control wheel to start playback.**

Available operations during movie playback

You can perform slow playback and sound volume adjustment, etc. by pressing the down side of the control wheel.

- ▶ : Playback
- ❚❚ : Pause
- ▶▶ : Fast-forward
- ◀◀ : Fast-rewind
- ❚▶ : Forward slow playback
- ◀❚ : Reverse slow playback
- ▶▶❚ : Next movie file
- ❚◀◀ : Previous movie file
- ❚❚▶ : Displays the next frame
- ◀❚❚ : Displays the previous frame
- : Photo Capture
- : Sound volume adjustment
- : Closes the operation panel

Hint

- The product creates an image database file on a memory card to record and play back images. An image that is not registered in the image database file may not be played back correctly. To play back images shot using other devices, register those images to the image database file using MENU → 📷/▶■ (Shooting) → [Media] → [Recover Image DB].
- “Forward slow playback,” “Reverse slow playback,” “Displays the next frame” and “Displays the previous frame” are available during pause.
- Movie files recorded using other products may not be playable on this camera.
- For movies with Shot Marks, the positions of the Shot Marks are displayed on the playback bar during movie playback. In addition, the Shot Mark icon is displayed on the screen when a scene to which a Shot Mark was added is played back.
- You can jump to the positions of Shot Marks by turning the rear dial L or rear dial R while paused.

Note

- Even if you shoot the movie vertically, the movie will be displayed horizontally on the screen or the finder of the camera.

- If the camera is connected to a TV or monitor, etc. via an HDMI cable, the playback screen will not be displayed in the viewfinder.

Related Topic

- Play Set of Multi. Media
- Disp Set of Multi Media
- Recover Image DB (still image/movie)

TP1002134071

5-069-971-11(6) Copyright 2026 Sony Corporation

Playback/Monitor. Vol.

Sets the sound volume for movie playback.

1. **MENU → (Setup) → [Sound Option] → [Playback/Monitor. Vol.] → desired setting.**

Adjusting the volume during playback

Press the bottom side of the control wheel while playing back movies to display the operation panel, then adjust the volume. You can adjust the volume while listening to the actual sound.

TP1002110631

5-069-971-11(6) Copyright 2026 Sony Corporation

4ch Audio Monitoring (movie)

Sets the audio to be monitored by the device connected to the (headphone) terminal of the camera when you record movie audio in 4 channels or when playing back a movie recorded in 4 channels.

1. **MENU → (Setup) → [Sound Option] → [4ch Audio Monitoring] → desired setting.**

Menu item details

CH1/CH2:
Outputs audio from channel 1 to the L (left) side and from channel 2 to the R (right) side.

CH3/CH4:
Outputs audio from channel 3 to the L (left) side and from channel 4 to the R (right) side.

CH1+3/CH2+4:
Outputs the mixed audio of channel 1 and channel 3 to the L (left) side and the mixed audio of channel 2 and channel 4 to the R (right) side.

CH1/CH1:
Outputs audio from channel 1 to the L (left) side and R (right) side.

CH2/CH2:
Outputs audio from channel 2 to the L (left) side and R (right) side.

Note

- When shooting movies, the [4ch Audio Monitoring] settings will be enabled if the camera is set to record audio in 4 channels.
- The camera cannot output audio in 4 channels to the device connected to the (headphone) terminal of the camera.
- When outputting audio through the speakers of the camera, the channels will also change depending on the [4ch Audio Monitoring] setting.

Related Topic

- Shoe Audio Set.

TP1002151172

5-069-971-11(6) Copyright 2026 Sony Corporation

Interchangeable Lens Digital Camera
ILCE-7M5 α7V

Playing back images using slideshow (Slide Show)

Automatically plays back images continuously.

1. **MENU → ▶ (Playback) → [Viewing] → [Slide Show] → desired setting.**
2. **Select [Enter].**

Menu item details

Repeat:
Select [On], in which images are played back in a continuous loop, or [Off], in which the product exits the slideshow when all the images are played back once.

Interval:
Select the display interval for images from among [1 Sec], [3 Sec], [5 Sec], [10 Sec] or [30 Sec].

To quit the slideshow in the middle of playback

Press the MENU button to quit the slideshow. You cannot pause the slideshow.

Hint

- During playback, you can display the next/previous image by pressing the right/left side of the control wheel.

TP1002110622

5-069-971-11(6) Copyright 2026 Sony Corporation

Cont. Play for Interval

Continuously plays back images shot using interval shooting.
You can create movies from still images produced by interval shooting using the computer software Imaging Edge Desktop(Viewer). You cannot create movies from the still images on the camera.

1. **MENU → ▶ (Playback) → [Viewing] → [Cont. Play for Interval].**
2. **Select the image group that you want to play back, and then press the center of the control wheel.**

Hint

- On the playback screen, you can start continuous playback by pressing the down button while displaying an image in the group.
- You can resume play or pause by pressing the down button during playback.
- You can change the playback speed by turning the front dial, rear dial L, rear dial R, or control wheel during playback. You can also change the playback speed by selecting MENU → ▶ (Playback) → [Viewing] → [Play Speed for Interval].
- You can continuously play back images shot with continuous shooting as well.

Related Topic

- Interval Shoot Func.
- Play Speed for Interval
- Introduction to desktop application (Imaging Edge Desktop/Catalyst)

TP1002149646

5-069-971-11(6) Copyright 2026 Sony Corporation

Play Speed for Interval

Sets the playback speed for still images during [Cont. Play for Interval].

1. **MENU → (Playback) → [Viewing] → [Play Speed for Interval] → desired setting.**

Hint

- You can also change the playback speed by turning the front dial, rear dial L, rear dial R, or the control wheel during [Cont. Play for Interval].

Related Topic

- Cont. Play for Interval

TP1002149647

5-069-971-11(6) Copyright 2026 Sony Corporation

Interchangeable Lens Digital Camera
ILCE-7M5 α7V

Playing back images on the image index screen (Image Index)

You can display multiple images at the same time in playback mode.

1. **Press the (Image Index) button while the image is being played back.**
2. **Select the image by pressing the top/bottom/right/left sides of the control wheel or turning the control wheel.**

To change the number of images to be displayed

MENU → (Playback) → [Playback Option] → [Image Index] → desired setting.

Menu item details

9 Images/30 Images

To return to single-image playback

Select the desired image and press the center of the control wheel.

To display a desired image quickly

Select the bar on the left of the image index screen using the control wheel, then press the top/bottom sides of the control wheel. While the bar is being selected, you can display the calendar screen or folder selection screen by pressing the center.

TP1002110613

5-069-971-11(6) Copyright 2026 Sony Corporation

Interchangeable Lens Digital Camera
ILCE-7M5 α7V

Playback Filter Condition

You can narrow down the images to be played back using multiple filtering conditions.

1. **MENU → ▶ (Playback) → [Playback Target] → [Playback Filter Condition] → Set the desired conditions, and then select [Execute Filter].**

Menu item details

Date:
Filters the playback target by date.

Folder :
Filters the playback target by folder.

Still Images/Movies :
Sets the playback target to still images only or to movies only. ([Still Image]/[Movie])

Rating:
Filters the playback target by rating. ([★] - [★★★]/[★OFF])

Protect:
Filters the playback target by the presence of protection. ([Yes]/[No])

Shot Mark:
Filters the playback target by the presence of shot marks. ([Yes]/[Shot Mark1 Only]/[Shot Mark2 Only]/[No])

FTP Transfer Status:
Filters the playback target by transferring status to an FTP server. ([Non-transferred]/[Failed Transfer Img.]/[Success. Trans. Img.])

Smartphone Trans State :
Filters the playback target by transferring status to a smartphone. ([Non-transferred]/[Success. Trans. Img.])

File Format :
Filters the playback target by the file format when [Still Images/Movies] is set to [Still Image].
([RAW]/[JPEG]/[HEIF]/[RAW & JPEG]/[RAW & HEIF]/[RAW/RAW & JPEG]/[RAW/RAW & HEIF]/[Images Incl RAW])

File Format:
Filters the playback target by the recorded format when [Still Images/Movies] is set to [Movie]. ([XAVC HS 4K]/[XAVC S 4K]/[XAVC S HD]/[XAVC S-I 4K]/[XAVC S-I HD])

Hint

- The white lines at the top and bottom of the playback screen indicate that the playback target is being filtered.
- When you use the filtering condition [Date] or [Folder], add check marks to the dates/folders to set as the playback target. You can also specify the range using the Fn (Function) button.
- When you perform the following functions while the playback target is filtered, the function is applied only to the filtered images.
  - Delete
  - Protect
  - Rating
  - Copy
  - Transferring to a smartphone
  - FTP Transfer

Note

- Filtering of the playback target is canceled by the following operations.

- Shooting a still image or movie
- Crop
- Photo Capture
- Create Still Image
- Turning the camera off
- Inserting/removing a memory card

TP1002158471

5-069-971-11(6) Copyright 2026 Sony Corporation

Interchangeable Lens Digital Camera
ILCE-7M5 α7V

Image Order

Sets the order in which to display images on the playback screen.

1. **MENU → ▶ (Playback) → [Playback Target] → [Image Order] → desired setting.**

Menu item details

Date Order:
Displays images in order of date.

Folder Order:
Displays images in order of folder.

Hint

- When [Folder Order] is selected, the folder for movies is displayed on top.

TP1002158472

5-069-971-11(6) Copyright 2026 Sony Corporation

Display as Group

Sets whether or not to display continuously shot images or images shot using interval shooting, etc. as a group.

1. **MENU → ▶ (Playback) → [Playback Option] → [Display as Group] → desired setting.**

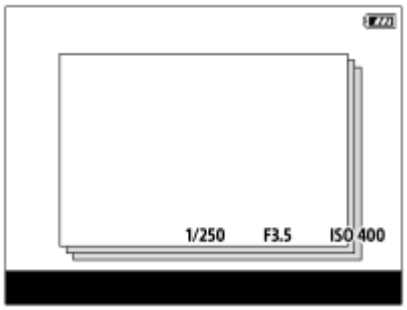

Menu item details

On:

Displays images as a group.

To play back the images in a group, select the group and press the center of the control wheel.

Off:

Does not display images as a group.

Hint

- The following images are grouped.
  - Images shot with [Drive Mode] set to [Cont. Shooting] (One sequence of images shot continuously by holding down the shutter button during continuous shooting becomes one group.)
  - Images shot with [Drive Mode] set to [Self-timer(Cont)]/[Focus Bracket]/[WB bracket]/[DRO Bracket] (Multiple images recorded in one shot become one group.)
  - Images shot with [Interval Shoot Func.] (Images shot during one session of interval shooting become one group.)
  - Images shot with [NR Shooting] (Multiple images recorded in one shot become one group.)
  - Images shot with [Shooting for HDR] (Multiple images recorded in one shot become one group.)
- On the image index screen, (Display as Group) icon is displayed over the group.

Note

- If you delete the group, all the images in the group will be deleted.

Related Topic

- Cont. Shooting
- Self-timer(Cont)
- WB bracket
- DRO Bracket
- Interval Shoot Func.
- NR Shooting Settings

- Shooting for HDR Set

TP1002148294

5-069-971-11(6) Copyright 2026 Sony Corporation

Interchangeable Lens Digital Camera
ILCE-7M5 α7V

Focus Frame Display (playback)

Sets whether or not to display a focus frame around the area where the camera focused when you play back a still image.

1. **MENU → [▶] (Playback) → [Playback Option] → [▶ Focus Frame Display] → desired setting.**

Menu item details

Off:
Does not display a focus frame during playback.

On:
Displays a focus frame in green during playback. If the subject is out of focus, the focus frame will be displayed in white.

Hint

- Even if multiple focus frames are displayed at the time of shooting, only the one indicating where the camera actually focused will be displayed during playback.
- Even if a focus frame is displayed around the face of the subject at the time of shooting, the focus frame will be displayed around the eye during playback when an eye is recognized.

Note

- A focus frame will not be displayed over the following images.
  - Still images shot with manual focus
  - Movies
  - Still images created with [Photo Capture]
- The focus frame is displayed only on the single-image playback screen. The focus frame is not displayed on the image index screen or over enlarged images.
- The focus frame is not displayed during auto reviewing.
- If you shoot an image with a different composition after performing auto-focusing, the focus frame will appear offset from the subject.
- Even if the focus frame is displayed in green, the subject may not be in focus.
- Even if you turn off the focusing frame display while shooting using the [AF Area Auto Clear] or [AF-C Area Display] function, when [▶ Focus Frame Display] is set to [On], the focusing frame will be displayed during playback.

TP1002151173

5-069-971-11(6) Copyright 2026 Sony Corporation

Aspect Marker Disp. (still image)

The aspect marker that was displayed during shooting can be displayed over the still image being played back.

1. **MENU → ▶ (Playback) → [Playback Option] → [Aspect Marker Disp.] → desired setting item.**

Menu item details

Aspect Marker Disp.:
Sets whether or not to display the aspect marker. ([On]/[Off])

Aspect Marker Level:
Sets the color density for the displayed marker. (0 to 15)

Note

- Although the color density selected on the setting screen for [Aspect Marker Level] may not be applied to the setting screen, the marker will be displayed with the selected color density on the playback screen.
- When the display setting is [Histogram], the aspect marker is not displayed.

Related Topic

- Marker Display (still image)

TP1002158473

5-069-971-11(6) Copyright 2026 Sony Corporation

Disp Specified Time Img.

You can play back images by specifying the shooting date and time.

1. **MENU → ▶ (Playback) → [Playback Option] → [Disp Specified Time Img.].**

2. **Set the date and time of the image to be played back using the control wheel, and then press the center.**

   The image shot on the specified date and time will be played back.

   - If there are no images shot on the specified date and time, the image shot on the closest date and time will be played back.

Note

- For movies, the date and time when the recording was started are treated as the shooting date and time.

TP1002153916

5-069-971-11(6) Copyright 2026 Sony Corporation

Setting the method for jumping between images (Image Jump Setting)

Sets the method of jumping between playback images for the front dial, rear dial L, and rear dial R, respectively.

1. **MENU → ▶ (Playback) → [Playback Option] → [Image Jump Setting] → Select the dial for which you would like to change the setting, and then select the desired setting.**

Menu item details

One by one / By 10 images / By 100 images:
Jumps in units of the specified number of images.

Top Image:
Plays back the first images of scenes (images shot with single shooting and the first shot of continuous shooting, etc.).

By 3 minutes/By 5 minutes/By 10 minutes/By 30 minutes/By 1 hour/By 3 hours/By 6 hours/By 12 hours/By 24 hours:
Jumps between images by the specified time unit based on the shooting date and time of the images.

Protect Only:
Plays back only protected images.

Rating Only:
Plays back all rated images.

Rating Only (★) - Rating Only (⁂):
Plays back only images for which a rating (★ to ⁂) has been specified.

W/O Rating Only:
Plays back only images that are not rated.

Shot Mark Only:
Sets the image jump target only to images with Shot Marks.

Shot Mark1 Only/Shot Mark2 Only:
Sets the image jump target only to images with the specified Shot Mark.

No Shot Mark:
Sets the image jump target only to images without Shot Marks.

Divider Frame Only:
Sets the image jump target only to divider frames.

Image After Divider:
Sets the image jump target only to images next to divider frames.

To add a Shot Mark to a movie

If you add a Shot Mark to a movie, you can use it as a mark for selecting, transferring, or editing the movie. To add a Shot Mark during recording, swipe left or right on the screen to display the touch function icons, and then touch S1 (Add Shot Mark1). You can also add a Shot Mark during playback by touching S1 (Add Shot Mark1) on the screen.

To create a divider frame

By creating a divider frame between sessions of shooting, you can use it as a mark when selecting images.
Assign [Create Divider Frame] to the desired key using [Custom Key/Dial Set.] in advance and press the custom key when you want to create a divider frame.

Hint

- To use the touch function icons, enable touch operations during shooting or playback in MENU → (Setup) → [Touch Operation] → [Touch Panel Settings].
- Use a custom key or the shutter button to add a second Shot Mark (Shot Mark 2). Shot Mark 1 can also be added using a custom key or the shutter button.
  - When adding a Shot Mark with a custom key: assign [Add Shot Mark1] or [Add Shot Mark2] in [Custom Key/Dial Set.] and press the assigned button while shooting.
  - When adding a Shot Mark with the shutter button: set [S with Shutter Button] to [Add Shot Mark1] or [Add Shot Mark2] and press the shutter button while shooting.
  - When adding a Shot Mark while playing back a movie: assign [Add/Delete Shot Mark1] or [Add/Delete Shot Mark2] in [Custom Key Setting] and press the assigned button during playback.

Related Topic

- Protecting recorded images (Protect)
- Rating
- Assigning frequently used functions to buttons and dials (Custom Key/Dial Set.)
- Selection/Memo Shot

TP1002153915

5-069-971-11(6) Copyright 2026 Sony Corporation

Interchangeable Lens Digital Camera
ILCE-7M5 α7V

Protecting recorded images (Protect)

Protects recorded images against accidental erasure. The (protect) mark is displayed on protected images.

1. **MENU → (Playback) → [Selection/Memo] → [Protect] → desired setting.**

Menu item details

Multiple Img.:
Applies the protection of the selected multiple images.
(1) Select the image to be protected, then press the center of the control wheel. The (check) mark is displayed in the check box. To cancel the selection, press the center again to remove the (check) mark.
(2) To protect other images, repeat step (1).
You can also specify the range using the Fn (Function) button.
(3) MENU → [OK].

All in this Folder:
Protects all images in the selected folder.

Cancel All in this Folder:
Cancels the protection of all images in the selected folder.

All with this date:
Protects all images taken on the selected date.

Cancel All with this date:
Cancels the protection of all images taken on the selected date.

All Images in This Group:
Protects all the images in the selected group.

Cancel All in This Group:
Cancels the protection of all the images in the selected group.

All Filtered:
Protects all the images filtered using the playback filter function.

Cancel All Filtered:
Cancels the protection of all the images filtered using the playback filter function.

Hint

- If you assign [Protect] to the key of your choice using MENU → (Setup) → [Operation Customize] → [Custom Key Setting], you can protect images or cancel protection by simply pressing the key. The [Protect] function is assigned to the C3 button in the default settings.
- If you select a group in [Multiple Img.], all the images in the group will be protected. To select and protect particular images within the group, execute [Multiple Img.] while displaying the images within the group.

Note

- The menu items that can be selected vary according to the setting for [Playback Filter Condition] and [Image Order] and the selected content.

Related Topic

- Display as Group
- Image Order
- Playback Filter Condition

TP1002110624

5-069-971-11(6) Copyright 2026 Sony Corporation

Rating

You can assign ratings to recorded images on a scale of the number of stars (★ - ★★★) to make it easier to find images.

1. **MENU → ▶ (Playback) → [Selection/Memo] → [Rating].**

   The image rating selection screen will appear.

2. **Press the left/right sides of the control wheel to display an image to which you want to assign a rating, and then press the center.**

3. **Select the level of ★ (Rating) by pressing the left/right side of the control wheel, and then press the center.**

   If images have been recorded simultaneously to the memory cards in slots 1 and 2 with [Recording Media] set to [Simult. Recording] or [Sort Recording], ratings will be assigned to the images in both slots (when the camera's system software (firmware) version is Ver.2.00 or later).

4. **Press the MENU button to exit the rating setting screen.**

To set ratings to multiple images at a time using the playback filter function

By using the playback filter function, you can set ratings to multiple images at a time. Perform [Rating] after narrowing down the images using [Playback Filter Condition], and then select [All Filtered].

- When you select [Multiple Img.], you can rate images one by one from among the narrowed down images only.
- When assigning a rating to images narrowed down using the playback filter function, the rating will be assigned only to images in the selected slot, even if they have been recorded simultaneously on the memory cards in both slots.

To set ratings when shooting still images

Assign [Add Rating (★)] through [Add Rating (★★★)] to the desired keys using [Custom Key/Dial Set.] in advance and press the custom keys after shooting a still image. You can set the rating for the last shot still image.

- Ratings cannot be set when shooting movies.

Hint

- You can also assign ratings when playing back images by using the custom key. Assign [Rating] to the desired key using [▶ Custom Key Setting] beforehand, and then press the custom key while playing back an image to which you want to assign a rating. The level of ★ (Rating) changes each time you press the custom key.
- Even when using a custom key for rating, if you set [Recording Media] to [Simult. Recording] or [Sort Recording], and the images are recorded simultaneously on both memory cards, you can set a rating for the images in both slots (when the camera's system software (firmware) is Ver.2.00 or later).
- By specifying ratings with the [Image Jump Setting] function, you can quickly find the desired image.

Related Topic

- Assigning frequently used functions to buttons and dials (Custom Key/Dial Set.)
- Rating Set(Custom Key)
- Setting the method for jumping between images (Image Jump Setting)
- Playback Filter Condition
- Selection/Memo Shot

TP1002148552

5-069-971-11(6) Copyright 2026 Sony Corporation

Rating Set(Custom Key)

Sets the available number of ★ (rating) when rating (ranking) images with the key to which you have assigned [Rating] using [▶ Custom Key Setting].

1. **MENU → ▶ (Playback) → [Selection/Memo] → [Rating Set(Custom Key)].**

2. **Add a ✓ (check) mark to the number of ★ (rating) that you want to activate.**

   You can select the checked number when setting [Rating] using the custom key.

Related Topic

- Rating
- Assigning frequently used functions to buttons and dials (Custom Key/Dial Set.)

TP1002148553

5-069-971-11(6) Copyright 2026 Sony Corporation

Clip Flag

During or after movie recording, you can mark clips with three types of flags: OK/NG/KEEP. The flags serve as markers for selection and editing during the post-production process.

1. **MENU → [▶] (Playback) → [Selection/Memo] → [Clip Flag].**

   The clip flag image selection screen will appear.

2. **Press the left/right side of the control wheel to display an image to which you want to add a clip flag, and then press the center of the control wheel.**

3. **Select a clip flag type by pressing the left/right side of the control wheel, and then press the center of the control wheel.**

   The clip flag settings cycle through the following: OK → NG → KP (KEEP) → No flag → OK.

4. **Press the MENU button to exit the clip flag setting screen.**

To set a clip flag with a custom key

You can assign [Clip Flag OK], [Clip Flag NG], or [Clip Flag KEEP] to the desired key in advance using [Custom Key/Dial Set.] or [▶ Custom Key Setting]. Then, you can add a clip flag by pressing that key during movie recording or playback.

- To remove a clip flag that you have added, press the key to which the clip flag setting is assigned twice.
- Clip flags can be overwritten. If you want to change the type of clip flag, press the key assigned the clip flag type to which you want to change.

To set a clip flag from the Fn menu (Playback)

You can also set a clip flag from the Fn menu when playing back movies. In advance, assign [Clip Flag OK], [Clip Flag NG], or [Clip Flag KEEP] in [▶ Fn Menu Settings], and then press the icon for the assigned function during playback to set a clip flag.

- If you want to delete the clip flag you added, touch the same icon again from the Fn menu.

TP1002161102

5-069-971-11(6) Copyright 2026 Sony Corporation

Interchangeable Lens Digital Camera
ILCE-7M5 α7V

Rotating an image (Rotate)

Rotates a recorded image counter-clockwise.

1. **Display the image to be rotated, then select MENU → ▶ (Playback) → [Edit] → [Rotate].**

2. **Press the center of the control wheel.**

   The image is rotated counter-clockwise. The image rotates as you press the center.
   If you rotate the image once, the image remains rotated even after the product is turned off.

Note

- Even if you rotate a movie file, it will be played back horizontally on the monitor or viewfinder of the camera.
- You may not be able to rotate images shot using other products.
- When viewing rotated images on a computer, the images may be displayed in their original orientation depending on the software.

TP1002110623

5-069-971-11(6) Copyright 2026 Sony Corporation

Crop

Crops recorded images.

1. **MENU → ▶ (Playback) → [Edit] → [Crop].**

   The image selection screen will appear.

2. **Select the still image that you want to crop, and then press the center of the control wheel.**

3. **Adjust the size and position of the cropping frame.**

   - You can change the aspect ratio of the cropping frame using the rear dial L/rear dial R. You can also change the orientation. If an aspect marker was displayed during shooting, you can crop the image according to the aspect marker.
   - You can change the size of the cropping frame using the front dial or the control wheel.
   - You can move the position of the cropping frame using the top/bottom/left/right side of the control wheel.
   - You can preview the cropped image by pressing the Fn button.

4. **Press the center of the control wheel.**

   The cropped image will be saved.

Hint

- The cropped image is saved as a separate image file. The original image remains as is.
- The file format and image quality setting of the cropped image will be the same as those of the original image.
- On the playback screen, the (Crop) icon is displayed with cropped images.

Note

- You cannot crop RAW images or movies.

TP1002152720

5-069-971-11(6) Copyright 2026 Sony Corporation

Photo Capture

Captures a chosen scene in a movie to save as a still image. First shoot a movie, then pause the movie during playback to capture decisive moments that tend to be missed when shooting still images, and save them as still images.

1. **Display the movie that you want to capture as a still image.**
2. **MENU → (Playback) → [Edit] → [Photo Capture].**
3. **Play back the movie and pause it.**
4. **Find the desired scene using forward slow playback, reverse slow playback, displays the next frame, and displays the previous frame, and then stop the movie.**
5. **Press (Photo Capture) to capture the chosen scene.**

   The scene is saved as a still image.

Hint

- With [JPEG/HEIF Switch], you can select either JPEG or HEIF as the recording file format for still images.

Related Topic

- Shooting movies (Intelligent Auto)
- Playing back movies
- JPEG/HEIF Switch (Photo Capture / Creating still images from Shot Marks)

TP1002142798

5-069-971-11(6) Copyright 2026 Sony Corporation

Creating still images from Shot Marks

While playing back a movie, you can create still images from movie frames with Shot Marks.

1. **Play back a movie with Shot Mark(s).**

2. **MENU → (Playback) → [Edit] → [Create Still Image].**

   By registering [Create Still Image] to [Custom Key Setting] or [Fn Menu Settings], you can easily call up [Create Still Image].

About the still images created

- You can select either the JPEG or HEIF format for the still images to be created. You can switch the format by selecting MENU → (Playback) → [Edit] → [JPEG/HEIF Switch].
- The size of the still images created will be the same size as the movie being played back (i.e., the size depends on the recording format of the movie).
- Created still images are recorded on the memory card in the same slot as the movie, regardless of the [Recording Media] setting.

Related Topic

- JPEG/HEIF Switch (Photo Capture / Creating still images from Shot Marks)
- File Format (movie)

TP1002160264

5-069-971-11(6) Copyright 2026 Sony Corporation

Shot Marks after still image creation (playback)

Sets whether to automatically delete Shot Marks after creating still images when playing back a movie using the [Create Still Image] function.

1. **MENU → (Playback) → [Edit] → [S after still img crt] → desired setting.**

Menu item details

Auto Delete:
Deletes Shot Marks automatically after creating still images.

Maintain:
Does not delete Shot Marks automatically after creating still images.

Related Topic

- Creating still images from Shot Marks

TP1002160265

5-069-971-11(6) Copyright 2026 Sony Corporation

JPEG/HEIF Switch (Photo Capture / Creating still images from Shot Marks)

Switches the file format (JPEG / HEIF) for still images captured with [Photo Capture] or [Create Still Image].
You can view and edit JPEG files in various environments. The HEIF format has high compression efficiency. The camera can record with high image quality and small file sizes in the HEIF format. Depending on the computer or software, you may not be able to view or edit HEIF files. In addition, a HEIF-compatible environment is required to play back still images in the HEIF format. You can enjoy high-quality still images by connecting the camera and the TV via HDMI.

1. **MENU → (Playback) → [Edit] → [JPEG/HEIF Switch] → desired setting.**

Menu item details

JPEG:
Switches the file format for still images captured to JPEG. This setting gives priority to compatibility.

HEIF(4:2:0):
Switches the file format for still images captured to HEIF 4:2:0 10bit. This setting gives priority to image quality and compression efficiency.

HEIF(4:2:2):
Switches the file format for still images captured to HEIF 4:2:2 10bit. This setting gives priority to image quality.

Hint

- The HEIF format allows you to record images with rich 10-bit gradation expression. Also, by setting [HEIF(4:2:2)], you can record with 4:2:2 color sampling, which has better color reproduction.

Note

- HEIF image files recorded with this camera cannot be displayed on other cameras that do not support the HEIF file format. Be careful not to accidentally erase HEIF image files by formatting the memory card or deleting the files.

Related Topic

- Photo Capture
- Creating still images from Shot Marks

TP1002151175

5-069-971-11(6) Copyright 2026 Sony Corporation

Copying images from one memory card to another (Copy)

You can copy images from a memory card in a slot that is selected using [Play Set of Multi. Media] to a memory card in another slot. If you want to use this function, set [Disp Set of Multi Media] to [Follow PB Settings] in advance.

1. **MENU → ▶ (Playback) → [Edit] → [Copy].**

2. **Set the conditions for the images to be copied, and then select [OK].**
   - You can select images to be copied by pressing the Fn (function) button. Add check marks to the images you want to copy.
     You can also specify the range using the Fn (Function) button.

3. **Select [OK], and press the center of the control wheel.**

   Copying will begin.

Menu item details

Target Group :
Specifies the target range for the images to be copied. ([This Date]/[This Folder]/[This Media]/[All Filtered])
- The options displayed may differ depending on the settings for [Image Order] or [Playback Filter Condition].

Still Images/Movies :
Specifies the images to be copied by the type of image. ([All]/[Only Still Images]/[Only Movies])
Target Img (Rating) :
Specifies the images to be copied by rating. ([★] - [★★★]/[★OFF])
Target Movie (S) :
Specifies the images to be copied by the presence of shot marks. ([All]/[Only Shot Mark Mov.])
Target Img (Protect) :
Specifies the images to be copied by the presence of protection. ([All]/[Only Protected Img.])

Note
- If images in a group are copied, the copied images will not be displayed as a group on the destination memory card.
- If protected images are copied, the protection will be canceled on the destination memory card.
- It may take a long time when many images are to be copied. Use a sufficiently charged battery pack.
- To copy a movie, the destination memory card must support the recording format of the movie. If the movie cannot be copied, a message will be displayed on the monitor of the camera.

Related Topic
- Play Set of Multi. Media
- Disp Set of Multi Media
- Image Order
- Playback Filter Condition

5-069-971-11(6) Copyright 2026 Sony Corporation

Interchangeable Lens Digital Camera
ILCE-7M5 α7V

Deleting multiple selected images (Delete)

You can delete multiple selected images. Once you have deleted an image, you cannot restore it. Confirm the image to be deleted beforehand.

1. **MENU → ▶ (Playback) → [Delete] → [Delete] → desired setting.**

Menu item details

All Other Than This Img.:
Deletes all images in the group except the selection.

All Images in This Group:
Deletes all images in the selected group.

Multiple Img.:
Deletes the selected images.

(1) Select the images to be deleted, then press the center of the control wheel. The ✓ (check) mark is displayed in the check box. To cancel the selection, press the center again to remove the ✓ (check) mark.

(2) To delete other images, repeat step (1).
You can also specify the range using the Fn (Function) button.

(3) MENU → [OK].

All in this Folder:
Deletes all images in the selected folder.

All with this date:
Deletes all images taken on the selected date.

All Filtered:
Deletes all the images filtered using the playback filter function.

Hint

- Perform [Format] to delete all images, including protected images.
- To display the desired folder or date, select the desired folder or date during playback by performing the following procedure: (Image Index) button → select the bar on the left using the control wheel → select the desired folder or date using the top/bottom sides of the control wheel.
- If you select a group in [Multiple Img.], all the images in the group will be deleted. To select and delete particular images within the group, execute [Multiple Img.] while displaying the images within the group.

Note

- The protected images cannot be deleted.
- The menu items that can be selected vary according to the settings for [Playback Filter Condition] and [Image Order] and the selected content.

Related Topic

- Display as Group
- Image Order
- Playback Filter Condition

- Delete button
- Format

TP1002110616

5-069-971-11(6) Copyright 2026 Sony Corporation

Interchangeable Lens Digital Camera
ILCE-7M5 α7V

Delete pressing twice

Sets whether or not you can delete the image currently being played back by pressing the (Delete) button twice in sequence.

1. **MENU → (Playback) → [Delete] → [Delete pressing twice] → desired setting.**

Menu item details

On:
Enables you to delete the image currently being played back by pressing the (Delete) button twice.

Off:
Does not enable you to delete the image currently being played back by pressing the (Delete) button twice.

TP1002152721

5-069-971-11(6) Copyright 2026 Sony Corporation

Interchangeable Lens Digital Camera
ILCE-7M5 α7V

Delete confirm.

You can set whether [Delete] or [Cancel] is selected as a default on the delete confirmation screen.

1. **MENU → ▶ (Playback) → [Delete] → [Delete confirm.] → desired setting.**

Menu item details

"Delete" first:
[Delete] is selected as the default setting.
"Cancel" first:
[Cancel] is selected as the default setting.

TP1002110636

5-069-971-11(6) Copyright 2026 Sony Corporation

Interchangeable Lens Digital Camera
ILCE-7M5 α7V

Delete Slot1/2

You can set whether to delete images recorded simultaneously to the memory cards in slots 1 and 2 with [Recording Media] set to [Simult. Recording] or [Sort Recording] together when deleting the image currently displayed by pressing the (Delete) button.
This function can be used when the camera's system software (firmware) is Ver.2.00 or later.

1. **MENU → (Playback) → [Delete] → [Delete Slot1/2] → desired setting.**

Menu item details

Select When Exec:
Each time you delete images, you can select whether to delete the selected image and the simultaneously recorded image together.

- Delete This Image: Deletes only the selected image.
- Delete Image of 1/2 : Deletes the selected image and the simultaneously recorded image together.
- Cancel: Cancels deletion.

Delete Both:
Always deletes the selected image and the simultaneously recorded image together.

Del. Select Only:
Always deletes only the selected image.

Note

- When selecting and deleting images using the [Delete] menu, you cannot use the [Delete Slot1/2] function.

Related Topic

- Rec. Media Settings (still image/movie): Recording Media (still image)
- Initial Pos. When Exec

TP1002321084

5-069-971-11(6) Copyright 2026 Sony Corporation

Initial Pos. When Exec

When [Delete Slot1/2] is set to [Select When Exec], you can set which option will be the initial position on the deletion confirmation screen.
This function can be used when the camera's system software (firmware) is Ver.2.00 or later.

1. **MENU → (Playback) → [Delete] → [Initial Pos. When Exec] → desired setting.**

Menu item details

This Image:
Sets [Delete This Image] (deletes only the selected image) to the initial position.

/ This Image:
Sets [Delete Image of /] (deletes the selected image and the simultaneously recorded image together) to the initial position.

Cancel:
Sets [Cancel] (cancels deletion) to the initial position.

Related Topic

- Delete Slot1/2

TP1002321085

5-069-971-11(6) Copyright 2026 Sony Corporation

Viewing images on a TV using an HDMI cable

To view images stored on this product using a TV, an HDMI cable (sold separately) and a TV equipped with an HDMI jack are required. For details, refer to the operating instructions supplied with the compatible TV.

1. **Turn off both this product and the TV.**

2. **Connect the HDMI terminal of this product to the HDMI jack of the TV using an HDMI cable (sold separately).**

   Use an HDMI cable that is compatible with the HDMI Type-A terminal of the product and the HDMI jack of the TV.

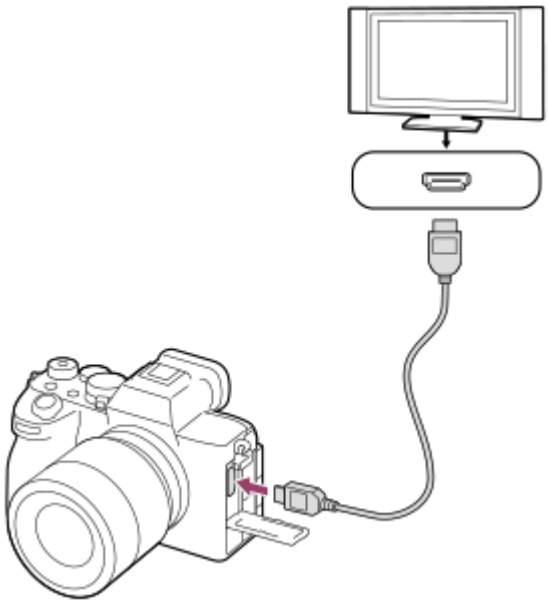

3. **Turn on the TV and switch the input.**

4. **Turn on this product.**

   Images shot with the product appear on the TV screen.

5. **Select an image using the right/left sides of the control wheel.**

   - The monitor of this camera is not lit up on the playback screen.
   - If the playback screen is not displayed, press the ▶ (Playback) button.

Note

- Do not connect this product and another device using the output terminals of both. Doing so may cause a malfunction.
- Some devices may not work properly when connected to this product. For example, they may not output video or audio.
- Use an HDMI cable with the HDMI logo or a genuine Sony cable.
- When [Time Code Output] is set to [On], the image may not be output properly to the TV or recording device. In such cases, set [Time Code Output] to [Off].

- If images do not appear on the TV screen properly, select MENU → (Setup) → [External Output] → [HDMI Resolution] → [2160p], [1080p] or [1080i] according to the TV to be connected.
- During HDMI output, when you switch the movie from 4K to HD image quality or vice-versa, or change the movie to a different frame rate or different color mode, the screen may become dark. This is not a malfunction.
- If the product performs unwanted operations in response to the TV remote control, select MENU → (Setup) → [External Output] → [CTRL FOR HDMI] → [Off].
- When [NTSC/PAL Selector] is set to PAL, the screen may black out for an instant in the following situations. This is not a malfunction.
  - When you start or stop recording movies while the shooting mode is set to a mode other than (Movie) or S&Q (S&Q Motion).
  - When you change the shooting mode from (Movie) or S&Q (S&Q Motion) to another mode.
  - When you play back a movie for the first time after switching to the playback mode.

TP1002134012

5-069-971-11(6) Copyright 2026 Sony Corporation

Format

When you use a memory card with this camera for the first time, we recommend that you format the card using the camera for stable performance of the memory card. Note that formatting permanently erases all data on the memory card, and is unrecoverable. Save valuable data on a computer, etc.

1. **MENU → / (Shooting) → [Media] → [Format] → desired memory card slot.**

2. **Select [Enter]. (Quick formatting)**
   - If you press the (Delete) button, a message to perform full formatting will be displayed. You can launch full formatting by selecting [Enter].

The difference between quick formatting and full formatting

Perform full formatting when you feel like the speed of recording to the memory card or read-out from the memory card has become slow, or when you want to erase data completely, etc.
Full formatting takes longer than quick formatting, because all areas of the memory card are initialized.

Hint

- You can also display the screen for formatting the memory card by pressing and holding the MENU button and then the (Delete) button on the shooting screen for approximately two seconds.
- You can cancel full formatting before it is completed. Even if you cancel full formatting in the middle of the process, the data will be erased, so you can use the memory card as is.

Note

- Formatting permanently erases all data including protected images and registered settings (from M1 to M4).
- The access lamp lights up during formatting. Do not remove the memory card while the access lamp is lit up.
- Format the memory card on this camera. If you format the memory card on the computer, the memory card may not be usable depending on the format type.
- It may take a few minutes to complete formatting, depending on the memory card.
- You cannot format the memory card if the remaining battery charge is less than 1%.

Related Topic

- Memory cards that can be used
- Notes on memory card

TP1002110648

5-069-971-11(6) Copyright 2026 Sony Corporation

Interchangeable Lens Digital Camera
ILCE-7M5 α7V

Rec. Media Settings (still image/movie): Recording Media (still image)

Selects the memory card slot to record still images. In the default settings, [Slot 1] is selected. If you want to use one memory card without changing the setting, use Slot 1.

1. **MENU → / (Shooting) → [Media] → [Rec. Media Settings] → [Recording Media] → desired setting.**

Menu item details

Slot 1:
Records still images on the memory card in Slot 1.

Slot 2:
Records still images on the memory card in Slot 2.

Simult. Recording:
Simultaneously records still images on the memory cards in Slot 1 and Slot 2.

Sort Recording:
Records still images with different file formats and image sizes by sorting them to different slots.
Set the file format and image size of still images for each slot.

Related Topic

- Rec. Media Settings (still image/movie): Recording Media (movie)
- Rec. Media Settings (still image/movie): Auto Switch Media Card
- Play Set of Multi. Media

TP1002152722

5-069-971-11(6) Copyright 2026 Sony Corporation

Interchangeable Lens Digital Camera
ILCE-7M5 α7V

Rec. Media Settings (still image/movie): Recording Media (movie)

Selects the memory card slot to record movies. In the default settings, [Slot 1] is selected. If you want to use one memory card without changing the setting, use Slot 1.

1. **MENU → / (Shooting) → [Media] → [Rec. Media Settings] →[Recording Media] → desired setting.**

Menu item details

Slot 1:
Records movies on the memory card in Slot 1.

Slot 2:
Records movies on the memory card in Slot 2.

Simult. Recording:
Simultaneously records movies on the memory cards in Slot 1 and Slot 2.

Related Topic

- Rec. Media Settings (still image/movie): Recording Media (still image)
- Rec. Media Settings (still image/movie): Auto Switch Media Card
- Play Set of Multi. Media

TP1002152723

5-069-971-11(6) Copyright 2026 Sony Corporation

Rec. Media Settings (still image/movie): Auto Switch Media Card

If a memory card in use becomes full or you have forgotten to insert a memory card into a slot, you can record images to the other memory card.

1. **MENU → / (Shooting) → [Media] → [Rec. Media Settings] → [Auto Switch Media Card] → desired setting.**

Menu item details

On:
The camera automatically starts recording on the other memory card when a memory card in use becomes full or if you have forgotten to insert a memory card.

Off:
The camera does not perform [Auto Switch Media Card].

How the camera switches the memory card slot in use

This section explains how the recording slot changes when memory cards are inserted into both slot 1 and slot 2 and [Auto Switch Media Card] is set to [On] during shooting.

- **When recording both still images and movies on a single memory card**

When images cannot be recorded to the memory card in use, the settings for [Recording Media] and [Recording Media] change automatically and images are recorded to the other memory card.
When the other memory card becomes full after switching, the camera starts recording in the former slot again.

Example: When [Recording Media] and [Recording Media] under [Rec. Media Settings] are both set to [Slot 1]

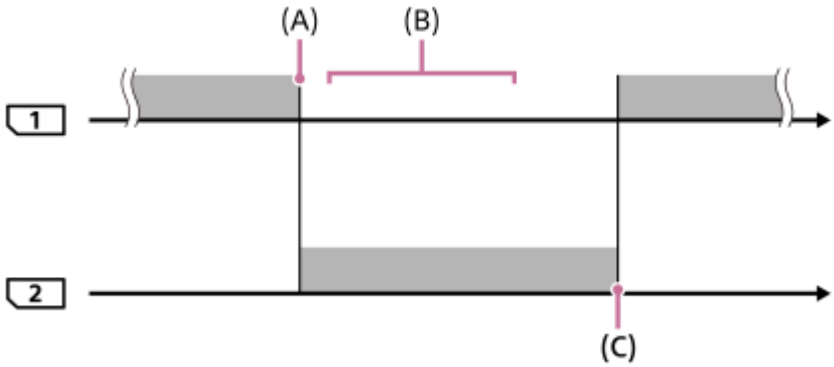

: Recording images
(A): Recording is no longer possible on the memory card in slot 1 (due to lack of capacity, etc.).
(B): The memory card is replaced with a recordable one.
(C): Recording is no longer possible on the memory card in slot 2 (due to lack of capacity, etc.).

- **When recording the same image simultaneously to two memory cards**

After either of the memory cards becomes full, images are recorded to the other card.
When you replace the full memory card with a recordable memory card, the camera is once again able to simultaneously

record images with the selected setting.

Example: [Recording Media] and [Recording Media] under [Rec. Media Settings] are both set to [Simult. Recording]

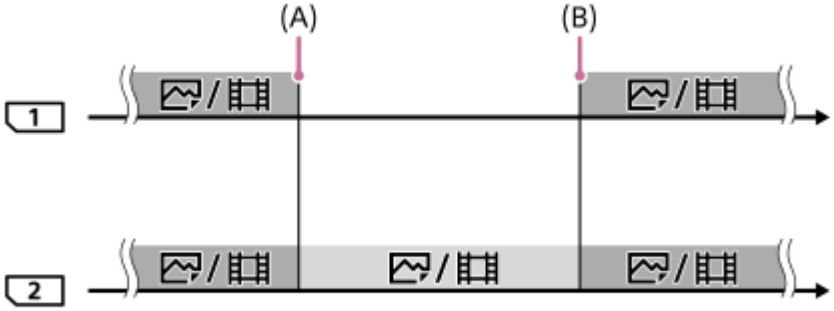

: Images are recorded simultaneously to memory cards in slots 1 and 2.
: Images are recorded only to the memory card in slot 2.
(A): Recording is no longer possible on the memory card in slot 1 (due to lack of capacity, etc.).
(B): Replace slot 1 with a recordable memory card.

- **When images are sorted and recorded onto two memory cards**

When either of the memory cards becomes full, the camera starts recording to the other memory card in both the RAW and JPEG/HEIF formats.
When you replace the full memory card with a recordable memory card, the camera is once again able to record the two types of images separately with the selected setting.

Example:

- When [Recording Media] under [Rec. Media Settings] is set to [Sort Recording]
- When [File Format] is set to [RAW] for slot 1 and [JPEG] for slot 2

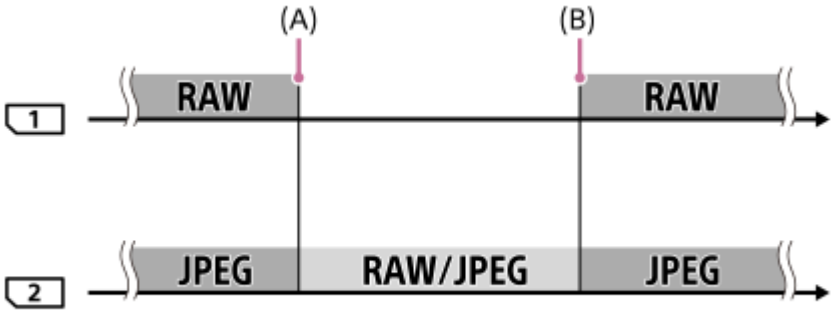

: Images are sorted and recorded in slots 1 and 2.
: All images are recorded to slot 2.
(A): Recording is no longer possible on the memory card in slot 1 (due to lack of capacity, etc.).
(B): Replace slot 1 with a recordable memory card.

Hint

- Images are recorded to the memory card in the slot displayed on the monitor with an arrow symbol. After the camera switches the slot using [Auto Switch Media Card], replace the memory card in the former slot with a recordable memory card.
- When recording both still images and movies on a single memory card, the settings for [Recording Media] and [Recording Media] change automatically as the slot switches. If you want to record on the slot in use before switching, select the desired slot with [Recording Media]/[Recording Media].

- If you want to record with the settings with [Recording Media] and [Recording Media], set [Auto Switch Media Card] to [Off].
- When [Auto Switch Media Card] is set to [On], the setting for [Disp Set of Multi Media] will be [All Slots], and the playback target will be the memory cards in all slots.
- When [Auto Switch Media Card] is set to [On] and the recording medium automatically switches from slot 1 to slot 2 while shooting still images, a folder is created in slot 2 with a number that is a continuation of the number last recorded in slot 1.

Related Topic

- Memory cards that can be used
- Recordable movie times
- Rec. Media Settings (still image/movie): Recording Media (still image)
- Rec. Media Settings (still image/movie): Recording Media (movie)

TP1002148559

5-069-971-11(6) Copyright 2026 Sony Corporation

Interchangeable Lens Digital Camera
ILCE-7M5 α7V

Recover Image DB (still image/movie)

If image files were processed on a computer, problems may occur in the image database file. In such cases, the images on the memory card will not be played back on this product. Also, if you use a memory card in the camera after using it in another device, the images on the memory card may not be played back correctly. For example, the images may not be displayed as a group. If these problems happen, repair the file using [Recover Image DB].
Images recorded on the memory card are not deleted by [Recover Image DB].

1. **MENU → / (Shooting) → [Media] → [Recover Image DB] → desired memory card slot → [Enter].**

Note

- If the battery pack is extremely depleted, image database files cannot be repaired. Use a sufficiently charged battery pack.

TP1002110653

5-069-971-11(6) Copyright 2026 Sony Corporation

Interchangeable Lens Digital Camera
ILCE-7M5 α7V

File/Folder Settings

Configure settings related to the folder and file name of the still image to be shot.

1. **MENU → (Shooting) → [File] → [File/Folder Settings] → desired setting.**

Menu item details

File Number:
You can set how to assign file numbers to still images.
[Series]: Does not reset file numbers for each folder.
[Reset]: Resets file numbers for each folder.

Forced File Number Reset:
Resets the still image file number and creates a new folder.

Set File Name:
You can specify the first three characters of the file name.

Folder Name:
You can set how folder names are assigned.
[Standard Form]: Folders are named as “folder number + any 5 characters”. Example: 100MSDCF
[Date Form]: Folders are named as “folder number + Y (the last digit of the year)/MM/DD”.
Example: 10060405 (Folder number: 100; date: 04/05/2026)

Hint

- The settings for [File Number] and [Set File Name] are applied to both Slot 1 and Slot 2.
- When [File Number] is set to [Series], file numbers will be assigned sequentially across the memory cards in the slots even if you switch the setting for [Rec. Media Settings] → [Recording Media] between Slot 1 and 2.
- When [Folder Name] is set to [Standard Form], the last 5 characters of the folder name can be set using [Create New Folder]. (Only uppercase letters, numbers, and underscores can be entered.)
- You can also change the last five characters of the folder name by using [Forced File Number Reset].

Note

- Only capital letters, numbers, and underscores can be used for [Set File Name]. Underscores cannot be used for the first character.
- The three characters specified using [Set File Name] are only applied to files recorded after the setting is made.

Related Topic

- Create New Folder
- File Settings

TP1002150251

5-069-971-11(6) Copyright 2026 Sony Corporation

Interchangeable Lens Digital Camera
ILCE-7M5 α7V

Select REC Folder

If [Folder Name] under [File/Folder Settings] is set to [Standard Form] and there are 2 folders or more, you can select the folder on the memory card to which images are to be recorded.

1. **MENU → (Shooting) → [File] → [Select REC Folder] → desired folder.**

Note

- You cannot select the folder when [Folder Name] under [File/Folder Settings] is set to [Date Form].
- If the camera is set to record images to memory cards in both slots, you may only select a common folder on both memory cards. If there is no common folder, you can make one using [Create New Folder].

Related Topic

- File/Folder Settings
- Create New Folder

TP1002110650

5-069-971-11(6) Copyright 2026 Sony Corporation

Create New Folder

Creates a new folder on the memory card for recording still images. A new folder is created with a folder number one greater than the largest folder number currently used. Images are recorded in the newly created folder.
Up to 9 999 images in total can be stored in one folder. When the folder capacity is exceeded, a new folder may be automatically created.

1. **MENU → (Shooting) → [File] → [Create New Folder].**

Hint

- The name of the folder that is created will vary depending on the [Folder Name] setting.
  [Standard Form]: In the folder name “Folder number + any 5 characters”, +1 will be added to the folder number.
  Example: 100MSDCF → 101MSDCF
  [Date Form]: In the folder name “Folder number + year/month/day (last digit of the year and 4 digits representing the month/day)”, +1 will be added to the folder number.
  Example: 10060405 → 10160405
- When [Folder Name] is set to [Standard Form], the last 5 characters of the folder name can be set using [Create New Folder]. (Only uppercase letters, numbers, and underscores can be entered.)
- You can also set the last 5 characters of the folder name by using [Forced File Number Reset].

Note

- When you insert a memory card that was used with other equipment into this product and shoot images, a new folder may be automatically created.
- If the camera is set to record images to memory cards in both slots, a new folder will be created on both memory cards. A new folder number will be one greater than the largest existing folder number on the two memory cards.
- If the camera is set to record images to memory cards in both slots and an image is shot, a new folder may be automatically created.
- You cannot change the folder name when [Folder Name] under [File/Folder Settings] is set to [Date Form].

Related Topic

- File/Folder Settings

TP1002110651

5-069-971-11(6) Copyright 2026 Sony Corporation

File Settings

Configure settings for the file names of recorded movies.

1. **MENU → (Shooting) → [File] → [File Settings] → desired setting item.**

Menu item details

File Number:
You can set how to assign file numbers to movies.
[Series]: Does not reset file numbers even if the memory card is changed.
[Reset]: Resets the file number when the memory card is changed.

Series Counter Reset:
Resets the series counter used when [File Number] is set to [Series].

File Name Format:
You can set the format for movie file names.
[Standard]: The file name of the recorded movie starts with “C.” Example: C0001
[Title]: The file name of the recorded movie becomes “Title+File number.”
[Date + Title]: The file name of the recorded movie becomes “Date+Title+File number.”
[Title + Date]: The file name of the recorded movie becomes “Title+Date+ File number.”

Title Name Settings:
You can set the title when [File Name Format] is set to [Title], [Date + Title], or [Title + Date].

Hint

- The settings for [File Number] and [File Name Format] are applied to both Slot 1 and Slot 2.
- When [File Number] is set to [Series], file numbers will be assigned sequentially across the memory cards in the slots even if you switch the setting for [Rec. Media Settings] → [Recording Media] between Slot 1 and 2.

Note

- When entering [Title Name Settings], the number/types of characters that can be entered are as follows.
  The maximum length is 37 characters. The types of characters that can be entered are letters of the alphabet, numbers, and symbols (. - _ @ ! # $ % + = ^ ~ ( ) , ; [ ]).
- Titles specified using [Title Name Settings] are only applied to movies recorded after the setting is made.
- You cannot set how folder names are assigned for movies.
- If you are using an SDHC memory card, [File Name Format] is locked to [Standard].
- If you insert a memory card used with [File Name Format] set to one of the following into another device, the memory card may not function properly.
  - [Title]
  - [Date + Title]
  - [Title + Date]
- If there are unused numbers due to file deletion, etc., these numbers will be reused when the movie file number reaches “9999.”

Related Topic

- File/Folder Settings

TP1002150252

5-069-971-11(6) Copyright 2026 Sony Corporation

IPTC Information

You can write IPTC information* when recording still images. Create and edit IPTC information using the IPTC Metadata Preset (https://www.sony.net/iptc/help/) and write the information to a memory card beforehand.

* IPTC information consists of digital image metadata attributes, as standardized by the International Press Telecommunications Council.

1. **MENU → (Shooting) → [File] → [IPTC Information] → desired setting item.**

Menu item details

Write IPTC Info:
Sets IPTC information to be written to still images. ([Off]/[IPTC1] - [IPTC20])

- If you select anything other than [Off], the IPTC number will appear on the shooting screen and IPTC information will be written to still images.

Import/Delete:
Imports IPTC information to the camera. Deletes IPTC information registered to the camera.

Delete All:
Deletes all IPTC information registered to the camera.

To import or delete IPTC information

You can register up to 20 presets of IPTC information to the camera.
To import IPTC information, select [Import/Delete], select the destination ([IPTC1] - [IPTC20]), and then press the center of the control wheel. Then, select the memory card slot containing the memory card to which the IPTC metadata files are saved and select the file that you want to register to the camera.
To delete IPTC information, select the IPTC information that you want to delete from the camera on the [Import/Delete] screen, and then press the (delete) button.

Hint

- When you play back images that have IPTC information, the IPTC (IPTC) icon appears on the screen.
- For details on how to use the IPTC Metadata Preset, refer to the following support page.
  https://www.sony.net/iptc/help/

Note

- You cannot edit or check IPTC information on the camera.
- Before lending out or handing over the camera, initialize the camera or perform [Delete All] to delete IPTC information.

Related Topic

- Setting Reset

TP1002149650

5-069-971-11(6) Copyright 2026 Sony Corporation

Copyright Info

Writes copyright information onto the still images.

1. **MENU → (Shooting) → [File] → [Copyright Info] → desired setting.**

2. **When you select [Set Photographer] or [Set Copyright], a keyboard appears on the screen. Enter your desired name.**

   You can only enter alphanumeric characters and symbols for [Set Photographer] and [Set Copyright]. You can enter up to 46 letters.

Menu item details

Write Copyright Info:
Sets whether to write copyright information. ([On]/[Off])

- If you select [On], a © (Copyright) icon will appear on the shooting screen.

Set Photographer:
Sets the photographer name.

Set Copyright:
Sets the copyright holder name.

Disp. Copyright Info:
Displays the current copyright information.

Note

- A © (Copyright) icon appears during the playback of images with copyright information.
- When entering [Set Photographer] and [Set Copyright], the numbers/types of characters that can be entered are as follows. The maximum length is 46 characters. The types of characters that can be entered are letters of the alphabet, numbers, and symbols.
- In order to prevent unauthorized use of [Copyright Info], be sure to clear the [Set Photographer] and [Set Copyright] columns before lending out or handing over your camera.
- Sony is not liable for problems or damages resulting from use of [Copyright Info].

Related Topic

- Keyboard screen

TP1002134048

5-069-971-11(6) Copyright 2026 Sony Corporation

Interchangeable Lens Digital Camera
ILCE-7M5 α7V

Write Serial Number (still image/movie)

Writes the camera's serial number when shooting.

1. **MENU → / (Shooting) → [File] → [Write Serial Number] → desired setting.**

Menu item details

On:
Writes the camera's serial number to the image.
Off:
Does not write the camera's serial number to the image.

TP1002149651

5-069-971-11(6) Copyright 2026 Sony Corporation

Wi-Fi Connect

Sets whether to use the Wi-Fi function of the camera.

1. **MENU → (Network) → [Wi-Fi] → [Wi-Fi Connect] → desired setting.**
   - Set this function to [On] to search for and connect to a connectable and registered access point. If no connectable and registered access points are found, use [WPS Push] or [Access Point Set.] to configure the settings.

Menu item details

On:
Uses the Wi-Fi function.

Off:
Does not use the Wi-Fi function.

Note

- The wireless access point or wireless router that relays the LAN connection is referred to as the “access point” in this manual.
- This camera can connect to an access point with WPA3-SAE or WPA2-PSK security settings or without security settings. To ensure a secure wireless LAN connection, we strongly recommend using an access point with WPA3 or WPA2 security settings.
- Connecting to an access point without security settings may result in hacking, access from malicious third parties, or attacks on vulnerabilities. Unless there is a specific reason, we do not recommend using an access point without security settings.
- It is important that you set the security settings when using a wireless LAN. If a security problem arises because no security precautions are in place or due to any inevitable circumstances when using a wireless LAN, Sony bears no responsibility for the loss or damage.

Related Topic

- WPS Push
- Access Point Set.

TP1002156989

5-069-971-11(6) Copyright 2026 Sony Corporation

WPS Push

If your access point has a Wi-Fi Protected Setup (WPS) button, you can register the access point to this product easily. For details about the available functions and settings of your access point, see the access point operating instructions or contact the administrator of the access point.

1. **MENU → (Network) → [Wi-Fi] → [WPS Push].**
2. **Push the Wi-Fi Protected Setup (WPS) button on the access point to connect.**

Hint

- When you want to connect to an access point using the 6 GHz frequency band, perform [Access Point Set.].

Note

- [WPS Push] works only if the security setting of your access point is set to WPA2 and your access point supports the Wi-Fi Protected Setup (WPS) button method. If the security setting is WPA3 only or your access point does not support the Wi-Fi Protected Setup (WPS) button method, perform [Access Point Set.].
- To ensure a secure wireless LAN connection, we strongly recommend using an access point with WPA3 or WPA2 security settings.
- Connecting to an access point without security settings may result in hacking, access from malicious third parties, or attacks on vulnerabilities. Unless there is a specific reason, we do not recommend using an access point without security settings.
- It is important that you set the security settings when using a wireless LAN. If a security problem arises because no security precautions are in place or due to any inevitable circumstances when using a wireless LAN, Sony bears no responsibility for the loss or damage.
- A connection may not be possible or the communication distance may be shorter depending on the surrounding conditions, such as the type of wall material and the presence of obstructions or radio waves between the product and access point. In this case, change the location of the product or move the product closer to the access point.

Related Topic

- Access Point Set.

TP1002110668

5-069-971-11(6) Copyright 2026 Sony Corporation

Access Point Set.

You can register your access point manually. Before starting the procedure, check the SSID name of the access point, security system, and password. The password may be preset in some devices. For details, see the access point operating instructions, or consult the access point administrator.

1. **MENU → (Network) → [Wi-Fi] → [Access Point Set.].**

2. **Select the access point you want to register.**

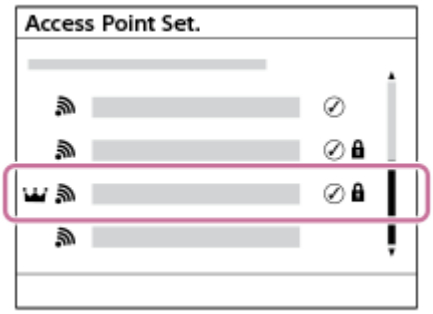

When the desired access point is displayed on the screen: Select the desired access point.
When the desired access point is not displayed on the screen: Select [Manual Setting] and set the access point.

- If you select [Manual Registration], input the SSID name of the access point, then select the security system. The default security method is [WPA2].
- If you select [WPS PIN], you can register the access point by entering the PIN code displayed on the camera into the connected device.

3. **Input the password, and select [OK].**

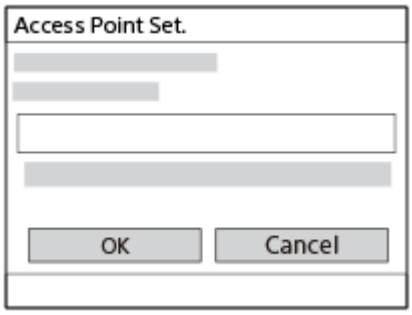

- Access points without (Lock mark) do not require a password.
- Note that unmasking your password risks revealing your password to a third party. Make sure that no one is around before unmasking.

4. **Select [OK].**

Other setting items

Depending on the status or the setting method of your access point, you may want to set more items.

For an unregistered access point, select the [Detail] button on the password entry screen.
For a registered access point, press the right side of the control wheel on the access point selection screen.

Priority Connection:
Select [On] or [Off].

IP Address Setting:
Select [Auto] or [Manual].

IP Address:
If you are entering the IP address manually, enter the set address.

Subnet Mask/Default Gateway/Primary DNS Server/Second DNS Server:
If you have set [IP Address Setting] to [Manual], enter each address according to your network environment.

Hint

- When you select a registered access point, [Priority Connection] for that access point becomes set to [On], prioritizing connections to that access point.
- The prioritized access point is marked with a (crown) icon.

Note

- When manually setting an access point or IP address, the number and types of characters that can be entered are as follows.
  - SSID : The maximum length is 32 characters. The types of characters that can be entered are letters of the alphabet (both uppercase and lowercase), numbers, and symbols.
  - Password : The length must be between 8 and 64 characters. The types of characters that can be entered are letters of the alphabet (both uppercase and lowercase), numbers, and symbols.
  - IP Address/Subnet Mask/Default Gateway/Primary DNS Server/Second DNS Server: The maximum length is 15 characters. The types of characters that can be entered are numbers and “.” only.
- Once an access point is registered, [Priority Connection] for that access point is set to [On]. If you want to stop preferentially connecting to a certain access point, set [Priority Connection] for the access point to [Off].
- If there are 2.4 GHz, 5 GHz, and/or 6 GHz access points with the same SSID and encryption format, the access point with the strongest radio field will be displayed.

Related Topic

- WPS Push
- Keyboard screen

TP1002110669

5-069-971-11(6) Copyright 2026 Sony Corporation

Interchangeable Lens Digital Camera
ILCE-7M5 α7V

Wi-Fi Frequency Band (models supporting 5 GHz)

Sets the frequency band for Wi-Fi communications. [5GHz] has faster communication speeds and more stable data transfers than [2.4GHz].
The [Wi-Fi Frequency Band] setting applies to a Wi-Fi Direct connection with a smartphone or computer, which is a direct connection to the camera not via an access point.

1. **MENU → (Network) → [Wi-Fi] → [Wi-Fi Frequency Band] → desired setting.**

Menu item details

2.4GHz/5GHz

TP1002150256

5-069-971-11(6) Copyright 2026 Sony Corporation

Display Wi-Fi Info.

Displays Wi-Fi information for the camera such as the MAC address, IP address, etc.

1. **MENU → (Network) → [Wi-Fi] → [Display Wi-Fi Info.].**

Hint

- Information other than the MAC address is displayed when the camera is connected to an access point.

To display the QR Code for the MAC address

- You can import the MAC address of this camera to a smartphone. Use one of the following methods to display the QR Code on the screen, and read the QR Code using the Transfer & Tagging smartphone application.
  - When the camera is turned off, turn the camera on while pressing the (Playback) button.
  - Press the (Delete) button on the [Display Wi-Fi Info.] screen.

  For details on how to read the QR Code using the Transfer & Tagging, refer to the following support page.
  https://support.d-imaging.sony.co.jp/app/transfer/l/macaddress/index.php
  The Transfer & Tagging is only available in certain countries and regions.

TP1002150413

5-069-971-11(6) Copyright 2026 Sony Corporation

SSID/PW Reset

This product shares connection information with devices that have permission to connect when establishing a Wi-Fi Direct connection with a smartphone or a computer. If you want to change which devices have permission to connect, reset the connection information.

1. **MENU → (Network) → [Wi-Fi] → [SSID/PW Reset] → [OK].**

Note

- If you connect this product to a smartphone after resetting the connection information, you must make the settings for the smartphone again.
- If you connect this product to a computer with Wi-Fi Direct after resetting the connection information, you must reconfigure the settings on the computer.

Related Topic

- Operating the camera from a computer (Remote Shoot Function)

TP1002110672

5-069-971-11(6) Copyright 2026 Sony Corporation

Bluetooth Settings

Controls the settings for connecting the camera to a smartphone or Bluetooth remote commander or shooting grip via a Bluetooth connection.

1. **MENU → (Network) → [Bluetooth] → Select a menu item and set the desired parameter.**

Menu item details

Bluetooth Function:
Sets whether to activate or not the Bluetooth function of the camera. ([On]/[Off])

Pairing:
Displays the screen for pairing the camera and smartphone or Bluetooth remote commander.

Manage Paired Device:
Enables you to check or delete the pairing information for devices paired with the camera.

Bluetooth Rmt Ctrl:
Sets whether or not to use a Bluetooth compatible remote commander (sold separately). ([On]/[Off])

Disp Device Address:
Displays the BD address of the camera.

Note

- When establishing a Bluetooth connection, only pair with trusted devices. Avoid unsolicited pairing requests or connections to unknown devices.
- Turn off the Bluetooth function when not in use.
- Check your paired devices regularly and delete any unnecessary ones.
- After you delete the pairing information for the camera from your smartphone, delete pairing information for the smartphone from the camera using [Manage Paired Device].

Related Topic

- Bluetooth Rmt Ctrl
- Cnct. while Power OFF (smartphone)
- Pairing the camera with a smartphone (Smartphone Connection)

TP1002142847

5-069-971-11(6) Copyright 2026 Sony Corporation

Bluetooth Rmt Ctrl

You can operate the camera using a Bluetooth compatible remote commander (sold separately) or shooting grip (sold separately). For details on compatible remote commanders or shooting grips, visit the Sony website in your area, or consult your Sony dealer or local authorized Sony service facility.

1. **On the camera, select MENU → (Network) → [Bluetooth] → [Bluetooth Function] → [On].**
   - If there is no Bluetooth device currently paired with the camera, the screen for pairing as described in Step 2 will appear.
2. **On the camera, select MENU → (Network) → [Bluetooth] → [Pairing] to display the screen for pairing.**
3. **On the Bluetooth remote commander, perform pairing.**
   - For details, refer to the instruction manual for the Bluetooth remote commander.
4. **On the camera, select [OK] on the confirmation screen for the Bluetooth connection.**
   - Pairing is complete, and you can now operate the camera from the Bluetooth remote commander. While [Bluetooth Rmt Ctrl] is set to [On], you can use the Bluetooth remote commander without performing the pairing procedure from the second time onwards.
   - [Bluetooth Rmt Ctrl] is set to [On] in the default settings. If you have set [Bluetooth Rmt Ctrl] to [Off], select MENU → (Network) → [Bluetooth] → [Bluetooth Rmt Ctrl] → [On] after Step 4.

Menu item details

On:
Enables Bluetooth remote commander operation.

Off:
Disables Bluetooth remote commander operation.

Icons for Bluetooth connection

(Bluetooth connection available): Bluetooth connection with the Bluetooth remote commander is established.
(Bluetooth connection unavailable): Bluetooth connection with the Bluetooth remote commander is not established.

Icons displayed when connecting to a Bluetooth remote commander

(remote commander mark): A Bluetooth remote commander can be used.

Hint

- The Bluetooth connection is only active while you are operating the camera using the Bluetooth remote commander.
- The Bluetooth icon is not displayed when the touch function icons are displayed in the movie recording mode. To see the Bluetooth icon, swipe the touch function icons left or right to hide the touch function icons.

- (remote commander mark) appears on the screen when a signal is received from a Bluetooth remote commander while [Bluetooth Rmt Ctrl] is set to [On]. The power-saving function will not work while (remote commander mark) is displayed.

Note

- When you initialize the camera, the pairing information is also deleted. To use the Bluetooth remote commander, perform pairing again.
- If the Bluetooth connection is unstable, remove any obstacles, such as people or metal objects from between the camera and the paired Bluetooth remote commander.
- Only one Bluetooth remote commander can be connected to the camera at a time.
- If the function does not work properly, check the following notes and then try pairing again.
  - Confirm that [Airplane Mode] for the camera is set to [Off].
  - If the function does not work properly even after you have performed the above operations, delete the pairing information for the device that you want to connect using [Manage Paired Device] on the camera.
- When establishing a Bluetooth connection, only pair with trusted devices. Avoid unsolicited pairing requests or connections to unknown devices.
- Turn off the Bluetooth function when not in use.
- Check your paired devices regularly and delete any unnecessary ones.
- After you delete the pairing information for the camera from your smartphone, delete pairing information for the smartphone from the camera using [Manage Paired Device].

Related Topic

- Bluetooth Settings

TP1002150255

5-069-971-11(6) Copyright 2026 Sony Corporation

Wired LAN (USB LAN)

Configures a wired LAN. You can connect this product to a network via wired LAN by connecting a commercially available USB-LAN conversion adaptor to the USB Type-C terminal on the product.

1. **MENU → (Network) → [Wired LAN] → desired setting.**

Menu item details

LAN IP Address Setting:
Sets whether to configure the IP address for the wired LAN automatically or manually. ([Auto]/[Manual])

Display Wired LAN Info.:
Displays wired LAN information for this product such as the MAC address or IP address.

IP Address:
If you are entering the IP address manually, enter the fixed address.

Subnet Mask/Default Gateway/Primary DNS Server/Second DNS Server:
If you have set [LAN IP Address Setting] to [Manual], enter each address according to your network environment.

Hint

- We recommend that you use a gigabit ethernet adaptor for USB Type-C connections.
- Only the USB Type-C terminal of USB PORT 1 supports SuperSpeed USB 10 Gbps (USB 3.2). It is recommended to use USB PORT 1 when connecting to a wired LAN.

To display the QR Code for the MAC address

- You can import the MAC address of this camera to a smartphone. Use the following method to display the QR Code on the screen, and read the QR Code using the Transfer & Tagging smartphone application.
  - Press the (Delete) button on the [Display Wired LAN Info.] screen.

  For details on how to read the QR Code using the Transfer & Tagging, refer to the following support page.
  https://support.d-imaging.sony.co.jp/app/transfer/l/macaddress/index.php
  The Transfer & Tagging is only available in certain countries and regions.

Note

- When connecting via a wired LAN, use a trusted network. We do not recommend using public networks that are not secure or networks with unknown origins.
- When using a network other than a trusted one, there is a risk of DoS (Denial of Service) attacks and loss of functionality. If you notice anything unusual, immediately disconnect the camera from the network.
- When entering an IP address in [LAN IP Address Setting], the number/types of characters that can be entered are as follows.
  - IP Address/Subnet Mask/Default Gateway/Primary DNS Server/Second DNS Server: The maximum length is 15 characters. The types of characters that can be entered are numbers and “.” only.
- Not all types of USB-LAN conversion adaptors are guaranteed to operate properly.

Related Topic

- Keyboard screen

TP1002147371

5-069-971-11(6) Copyright 2026 Sony Corporation

USB LAN/Tethering

Connects to the network by connecting a USB-LAN conversion adaptor to the camera or uses a tethering connection on your smartphone to connect to the network.

1. **MENU → (Network) → [USB LAN/Tethering] → desired connection method.**
   - To disconnect from the network, select [USB LAN Disconnection] or [Tethering Disconnection].

Menu item details

USB LAN Connection :
Connects to the network using a USB-LAN conversion adaptor.

Tethering Connection:
Connects to the network using your smartphone's tethering connection.

USB LAN/Teth Cnct:
Sets the USB terminal to be used for USB LAN connections and tethering connection.

When you select [USB LAN/Teth Cnct], the USB port setting screen is displayed. On the USB port setting screen, select [USB LAN/Teth Cnct] and set the USB terminal to be used.

Note

- When connecting via USB LAN, use a trusted network. We do not recommend using public networks that are not secure or networks with unknown origins.
- When using a network other than a trusted one, there is a risk of DoS (Denial of Service) attacks and loss of functionality. If you notice anything unusual, immediately disconnect the camera from the network.
- Only use trusted smartphones for tethering. We do not recommend connecting to devices of unknown origin that are not secure.

TP1002156913

5-069-971-11(6) Copyright 2026 Sony Corporation

Airplane Mode

When you board an airplane, etc., you can temporarily disable all the wireless-related functions including Wi-Fi.

1. **MENU → (Network) → [Network Option] → [Airplane Mode] → desired setting.**

   If you set [Airplane Mode] to [On], an airplane mark will be displayed on the screen.

TP1002110667

5-069-971-11(6) Copyright 2026 Sony Corporation

Edit Device Name

You can change the device name for Wi-Fi, [Remote Shooting], or Bluetooth connections.

1. **MENU → (Network) → [Network Option] → [Edit Device Name].**
2. **Select the input box, then input the device name → [OK].**

Note

- When entering the device name, the number/types of characters that can be entered are as follows.
  The maximum length is 20 characters. The types of characters that can be entered are letters of the alphabet (both uppercase and lowercase), numbers, and symbols.

Related Topic

- WPS Push
- Access Point Set.
- Operating the camera from a computer (Remote Shoot Function)
- Keyboard screen

TP1002110670

5-069-971-11(6) Copyright 2026 Sony Corporation

Importing root certification to the camera (Import Root Certificate)

Imports a root certificate needed to verify a server from a memory card.
The root certificate is used when executing encrypted communication during FTP transfers and network streaming, etc.
The root certificate is saved to the camera and can be updated.

1. **Save a root certificate to a memory card.**
   - Save the certificate to the root directory of the memory card. Name the file as follows according to the function you will use.
     - [FTP Function]: cacert.pem (PEM format)
     - [Streaming]: RTMPcert.pem (PEM format)
     - [Cloud Connection and other functions]: sonycert
2. **Insert the memory card to which the root certificate has been saved into Slot 1 on the camera.**
3. **MENU → (Network) → [Network Option] → [Import Root Certificate] → Select a function that uses the root certificate, and then select [OK].**

   The root certificate saved to the memory card is read by the camera, and then the root certificate on the camera is updated.

Menu item details

FTP Function:
Reads a root certificate to verify the FTP server.

Streaming:
Reads a root certificate to verify the distribution server for network streaming.

Cloud Connection and other functions *:
Reads a root certificate to verify the server for the cloud connection or other functions.

- Sony will provide “sonycert” used for [Cloud Connection and other functions] as needed. The certificate used in this function is encrypted, so normal PEM-format certificates cannot be read.

* The cloud connection may only be available in certain countries and regions.

Note

- Do not remove the memory card from the camera during read operations.
- When the network settings are reset, the root certificate on the camera is reset as well.
- The maximum size of a root certificate that can be loaded is 1 MB per certificate.

TP1002147385

5-069-971-11(6) Copyright 2026 Sony Corporation

Access Authen. Settings

Encrypts communications between the camera and device during remote shooting or image transfer.

1. **MENU → (Network) → [Network Option] → [Access Authen. Settings] → desired setting item.**

Menu item details

User:
Sets the username for access authentication.

Password:
Sets the password for access authentication.

Generate Password:
Automatically generates a password for access authentication.

Note

- The username and password for [Access Authen. Settings] are automatically generated and set when the camera is purchased. When setting your own username and password, be careful not to be intercepted by others.
- For the password in [Access Authen. Settings], set a character string that is long enough that it is difficult for others to guess, and keep it securely.
- If you unmask your password when entering it, there is a risk that it will be revealed to a third party. Make sure that no one is around before unmasking.
- Initialize the camera before lending or giving it to others.
- The numbers/types of characters that can be entered for the following items are as follows.
  - [User]: The maximum length is 16 characters. The types of characters that can be entered are letters of the alphabet (both uppercase and lowercase), numbers, and symbols (! % . = _).
  - [Password]: The number must be between 8 and 16 characters. The types of characters that can be entered are letters of the alphabet (both uppercase and lowercase), numbers, and symbols (! % . = _ - + ,).

Related Topic

- Access Authen. Info
- Keyboard screen

TP1002156988

5-069-971-11(6) Copyright 2026 Sony Corporation

Access Authen. Info

Displays the information required when connecting the camera to a computer or smartphone using access authentication.

1. **MENU → (Network) → [Network Option] → [Access Authen. Info].**

   The information required to connect such as the username, password, MAC address, and fingerprint of this camera are displayed.

Note

- When displaying [Access Authen. Info] on the screen, make sure that no one is around to avoid the information on the screen being seen by others and to prevent unauthorized use of usernames, passwords, and fingerprints.
- Initialize the camera before lending or giving it to others.

Related Topic

- Access Authen. Settings

TP1002156987

5-069-971-11(6) Copyright 2026 Sony Corporation

Wi-Fi Direct Settings

Changes the Wi-Fi Direct setting to improve connection compatibility.

1. **MENU → (Network) → [Network Option] → [Wi-Fi Direct Settings]→ desired setting.**

Menu item details

Type1 (Standard):
Connects via Wi-Fi Direct in a standard format.
It is recommended that you normally set [Wi-Fi Direct Settings] to [Type1 (Standard)].

Type2:
Set to [Type2] only if you cannot connect via Wi-Fi Direct with the [Type1 (Standard)] setting.
This may improve the Wi-Fi Direct connection.

Note

- If you change the setting when the Wi-Fi connection is normal, it may affect connections with external devices.

TP1002160976

5-069-971-11(6) Copyright 2026 Sony Corporation

Reset Network Set.

Resets all the network settings to default settings.
[Airplane Mode] will not be reset to [Off] even if you perform [Reset Network Set.] when [Airplane Mode] is set to [On].

1. **MENU → (Network) → [Network Option] → [Reset Network Set.] → [Enter].**

Note

- Even if you execute [Reset Network Set.], your Creators' Cloud account information will not be deleted. Your Creators' Cloud account information can be deleted in [Cloud Information].

Related Topic

- Displaying cloud connection information (Cloud Information)

TP1002142883

5-069-971-11(6) Copyright 2026 Sony Corporation

Interchangeable Lens Digital Camera
ILCE-7M5 α7V

FTP Transfer Func.

You can set up image transferring using an FTP server or transfer images to the FTP server. Basic knowledge of FTP servers is required.
For details, refer to the “FTP Help Guide.”
https://rd1.sony.net/help/di/ftp_2540/h_zz/

1. **MENU → (Network) → [FTP Transfer] → [FTP Transfer Func.] → desired setting.**

Related Topic

- Importing root certification to the camera (Import Root Certificate)

TP1002147368

5-069-971-11(6) Copyright 2026 Sony Corporation

Interchangeable Lens Digital Camera
ILCE-7M5 α7V

Monitor Brightness

Adjust the brightness of the screen.

1. **MENU → (Setup) → [Finder/Monitor] → [Monitor Brightness] → desired setting.**

Menu item details

Manual:
Adjusts the brightness within the range of –2 to +2.

Sunny Weather:
Sets the brightness appropriately for shooting outdoors.

Note

- The [Sunny Weather] setting is too bright for shooting indoors. Set [Monitor Brightness] to [Manual] for indoor shooting.

TP1002134011

5-069-971-11(6) Copyright 2026 Sony Corporation

Viewfinder Bright.

When using the viewfinder, this product adjusts the brightness of the viewfinder according to the surrounding environment.

1. **MENU → (Setup) → [Finder/Monitor] → [Viewfinder Bright.] → desired setting.**

Menu item details

Auto:
Adjusts the brightness automatically.

Manual:
Selects the desired brightness from the setting values.

Note

- When the temperature of the camera rises, the viewfinder may become dark.

TP1002134038

5-069-971-11(6) Copyright 2026 Sony Corporation

Finder Color Temp.

Adjusts the color temperature of the viewfinder.

1. **MENU → (Setup) → [Finder/Monitor] → [Finder Color Temp.] → desired setting.**

Menu item details

-2 to +2:
When you select “-,” the viewfinder screen changes to a warmer color, and when you select “+,” it changes to a colder color.

TP1002142806

5-069-971-11(6) Copyright 2026 Sony Corporation

Finder Frame Rate (still image)

Display the subject's movements more smoothly by adjusting the frame rate of the viewfinder during still image shooting. This function is convenient when shooting a fast-moving subject.

1. **MENU → (Setup) → [Finder/Monitor] → [Finder Frame Rate] → desired setting.**
   - This function can be assigned to key of your choice using [Custom Key/Dial Set.].

Menu item details

Standard:
Displays the subject at a normal frame rate on the viewfinder.

High:
Displays the movements of the subject more smoothly on the viewfinder.

Note

- Even when [Finder Frame Rate] is set to [High], the setting may switch to [Standard] automatically depending on the temperature of the shooting environment and the shooting conditions.
- The frame rate is restricted in the following situations:
  - During playback
  - During HDMI connection
  - When the temperature inside the camera's body is high

Related Topic

- Assigning frequently used functions to buttons and dials (Custom Key/Dial Set.)

TP1002142882

5-069-971-11(6) Copyright 2026 Sony Corporation

Monitor Low Bright (still image)

Sets whether to lower the brightness of the monitor when the camera is not operated for a certain period of time in shooting modes for still images.

1. **MENU→ (Setup) → [Power Setting Option] → [Monitor Low Bright] → desired setting.**

Menu item details

Does not turn OFF:
Does not lower the brightness of the monitor.

2 Sec/5 Sec/10 Sec/15 Sec/20 Sec/25 Sec/30 Sec/1 Min:
Lowers the brightness of the monitor after the designated period of time has elapsed without any operations performed.

The monitor will return to its previous brightness level if you operate the camera.

Hint

- Functions such as subject recognition continue to function while the monitor brightness is lowered.

TP1002161116

5-069-971-11(6) Copyright 2026 Sony Corporation

Monitor Off (still image)

Sets whether or not to turn the monitor off automatically in shooting modes for still images.

1. **MENU → (Setup) → [Power Setting Option] → [Monitor Off] → desired setting.**

Menu item details

Does not turn OFF:
Does not turn the monitor off.

2 Sec/5 Sec/10 Sec/15 Sec/30 Sec/1 Min/2 Min/3 Min/5 Min/10 Min/30 Min:
Turns the monitor off after the designated time has been elapsed without any operation performed.
You can resume shooting by performing an operation, such as pressing the shutter button halfway down.

Note

- If you will not be using the camera for a long period of time, turn the camera off.

TP1002152697

5-069-971-11(6) Copyright 2026 Sony Corporation

Power Save

Sets the amount of time that the camera will wait before going into the power save mode if it is not in use (except when powered from a computer or smartphone). You can resume shooting by pressing the shutter button halfway down or performing other operations.

1. **MENU → (Setup) → [Power Setting Option] → [Power Save] → desired setting.**

Menu item details

Off/10 Sec/15 Sec/30 Sec/1 Min/2 Min/3 Min/5 Min/10 Min/30 Min

Note

- Turn off the product when you do not use it for a long time.
- When [Power Save] is set to [Off] or [30 Min], power consumption becomes higher than usual.
- The power save function is deactivated in the following situations:
  - When powered via USB from a computer or other device
  - While playing back slideshows
  - During FTP transfer
  - While recording movies
  - While connected to a computer or TV
  - When using a Bluetooth remote commander
  - While streaming
  - While uploading images to Creators' Cloud

TP1002134045

5-069-971-11(6) Copyright 2026 Sony Corporation

Power Save by Monitor

Sets whether or not to enable power save linkage when the monitor is opened or closed facing inward.

1. **MENU → (Setup) → [Power Setting Option] → [Power Save by Monitor] → desired setting.**

Menu item details

Both Linked :
Enables power save linkage with the monitor. The camera returns from power saving mode when the monitor is opened, and enters power saving mode when the monitor is closed facing inward.

Open: Return :
The camera returns from power saving mode when the monitor is opened.

Close: Power Save :
The camera enters power saving mode when the monitor is closed facing inward.

Does Not Link :
Disables power save linkage with the monitor.

TP1002153993

5-069-971-11(6) Copyright 2026 Sony Corporation

Auto Power OFF Temp.

Sets the temperature of the camera at which the camera turns off automatically during shooting. When it is set to [High], you can continue shooting even when the temperature of the camera gets hotter than normal.

1. **MENU → (Setup) → [Power Setting Option] → [Auto Power OFF Temp.] → desired setting.**

Menu item details

Standard:
Sets the standard temperature for the camera to turn off.

High:
Sets the temperature at which the camera turns off to higher than [Standard].

Notes when [Auto Power OFF Temp.] is set to [High]

- Do not shoot while holding the camera in your hand. Use a tripod.
- Using the camera while holding it in your hand for a long period of time may cause low-temperature burns.

Continuous recording time for movies when [Auto Power OFF Temp.] is set to [High]

The duration of time available for continuous movie recording is as follows when the camera starts recording with the default settings after the power has been turned off for a while. The following values indicate the continuous time from when the camera starts recording until the camera stops recording.

Ambient temperature: 25°C (77°F)
Continuous recording time for movies (HD): Approx. 120 minutes

Continuous recording time for movies (4K): Approx. 90 minutes

Ambient temperature: 40°C (104°F)
Continuous recording time for movies (HD): Approx. 120 minutes

Continuous recording time for movies (4K): Approx. 60 minutes

HD: XAVC S HD (60p 50M/50p 50M 4:2:0 8bit; when the camera is not connected via Wi-Fi; when using a CFexpress Type A memory card; when the monitor is open)
4K: XAVC S 4K (60p 150M/50p 150M 4:2:0 8bit; when the camera is not connected via Wi-Fi; when using a CFexpress Type A memory card; when the monitor is open)

Note

- Even if [Auto Power OFF Temp.] is set to [High], depending on the conditions or the temperature of the camera, the recordable time for movies may not change.

Related Topic

- Recordable movie times

TP1002147367

5-069-971-11(6) Copyright 2026 Sony Corporation

Interchangeable Lens Digital Camera
ILCE-7M5 α7V

Display Quality (still image)

You can change the display quality.

1. **MENU → (Setup) → [Finder/Monitor] → [Display Quality] → desired setting.**

Menu item details

High:
Displays in high quality.

Standard:
Displays in standard quality.

Hint

- If the viewfinder displays flickering (moiré patterns or jaggies) in fine lines, etc., this may be improved by selecting [High].

Note

- When [High] is set, battery consumption will be higher than when [Standard] is set.
- When the temperature of the camera rises, the setting may become locked to [Standard].

TP1002110637

5-069-971-11(6) Copyright 2026 Sony Corporation

USB Cnct Mode (PORT1)/USB Cnct Mode (PORT2)

Sets the USB connection mode for each of the two USB terminals.

1. **MENU → (Setup) → [USB] → [USB Cnct Mode (PORT1)]/[USB Cnct Mode (PORT2)].**

   The USB port setting screen will appear.

2. **[USB Cnct Mode (PORT1)]/[USB Cnct Mode (PORT2)] → desired setting.**

Menu item details

Sel. When Connect:
Each time you connect the USB cable to the camera, select the mode you want to use from the following. ([Live Stream(USB Streaming)], [Image Transfer (MSC)], [Image Transfer (MTP)], or [Remote Shoot/Trn.])

USB Streaming:
Performs USB streaming via the connected computer or smartphone.

MassStorage(MSC):
Establishes a Mass Storage connection when connecting the camera to a computer, etc.
When you connect the camera to a computer or other USB device, the camera is recognized as a removable disk, and you can transfer files on the camera.

MTP:
Establishes an MTP connection between the camera, a computer, and other USB devices.
When you connect the camera to a computer or other USB device, the camera is recognized as a media device, and you can transfer still images/movies on the camera.

- The memory card in memory card slot 1 is the connection target.

Remote Shoot/Trn.:
Uses Imaging Edge Desktop (Remote) to control the product from a computer, including such functions as shooting and storing images on the computer. You can also use Creators' App to shoot images remotely and transfer images to your smartphone via a USB connection.

Related Topic

- USB Streaming (movie)
- Importing still images/movies to a computer
- Operating the camera from a computer (Remote Shoot Function)

TP1002161117

5-069-971-11(6) Copyright 2026 Sony Corporation

Interchangeable Lens Digital Camera
ILCE-7M5 α7V

USB LUN Setting

Enhances compatibility by limiting of USB connection functions.

1. **MENU → (Setup) → [USB] → [USB LUN Setting] → desired setting.**

Menu item details

Multi:
Normally, use [Multi].

Single:
Set [USB LUN Setting] to [Single] only if you cannot make a connection.

TP1002110644

5-069-971-11(6) Copyright 2026 Sony Corporation

Interchangeable Lens Digital Camera
ILCE-7M5 α7V

USB Power Supply

You can set whether to supply power when the camera is connected to a computer or other device via a USB cable and which of the two USB terminals to use for power supply.

1. **MENU → (Setup) → [USB] → [USB Power Supply].**

   The USB port setting screen will appear.

2. **[USB Power Supply] → desired setting.**

Menu item details

Auto:
Supplies power to the camera regardless of which of the two USB terminals is connected to a computer or other device.
When computers or other devices are connected to both USB terminals, power is supplied from the device with the greater power supply.

PORT1:
Power is supplied only from the USB PORT 1 terminal when a computer or other device is connected.

PORT2:
Power is supplied only from the USB PORT 2 terminal when a computer or other device is connected.

Off:
Does not supply power to the camera even when a computer or other device is connected to either of the two USB terminals.

Operations available while supplying power via a USB cable

The following table shows you which operations are available/unavailable while supplying power via a USB cable.

Operation	Available / Unavailable
Shooting images	Available
Playing back images	Available
Wi-Fi/Bluetooth connections	Available
Charging a battery pack	Unavailable
Turning the camera on without a battery pack inserted	Unavailable

Note

- Insert the battery pack into the product to supply power via USB cable.
- If you change [USB Power Supply] to a value other than [Off] while the USB cable is connected, power will be supplied according to the setting from the next time you connect the device. If you change the [USB Power Supply] setting to [Off], power supply will stop at that time.

5-069-971-11(6) Copyright 2026 Sony Corporation

HDMI Resolution

When you connect the camera to a TV or monitor device using an HDMI cable (sold separately), you can select the resolution to be output from the HDMI terminal of the camera during still image shooting or playback.

1. **MENU → (Setup) → [External Output] → [HDMI Resolution] → desired setting.**

Menu item details

Auto:
The camera automatically recognizes the resolution of the connected TV or output device and sets the output resolution accordingly.

2160p:
Outputs signals in 2160p.

1080p:
Outputs signals in HD picture quality (1080p).

1080i:
Outputs signals in HD picture quality (1080i).

Note

- If images are not displayed properly using the [Auto] setting, select [1080i], [1080p], or [2160p] based on the connected TV.

TP1002110641

5-069-971-11(6) Copyright 2026 Sony Corporation

HDMI Output Settings (movie)

Sets the video and audio to be output to an external recorder/player connected via HDMI when shooting a movie.
Use a Premium High Speed HDMI Cable (sold separately) to output 4K movies.

1. **MENU → (Setup) → [External Output] → [HDMI Output Settings] → desired setting item.**

Menu item details

Rec. Media dur HDMI Output:
Sets whether or not to record movies on the memory card of the camera during HDMI output.

[On]: Records movies on the memory card of the camera, and outputs the movies to the HDMI-connected device at the same time. The color depth for the output movie is based on [Record Setting] under [Movie Settings].

[Off(HDMI Only)]: Does not record movies on the memory card of the camera, and outputs movies only to devices connected via HDMI.

Output Resolution:
Sets the resolution of the image that will be output to another device connected via HDMI when [Rec. Media dur HDMI Output] is set to [On]. ([Auto] / [2160p] / [1080p] / [1080i])

4K Output Set.(HDMI Only):
Sets the frame rate and color depth of 4K movie output to another device connected via HDMI when [Rec. Media dur HDMI Output] is set to [Off(HDMI Only)]. ([60p 10bit] / [50p 10bit] / [30p 10bit] / [25p 10bit] / [24p 10bit])

Time Code Output:
Sets whether or not to output the time code and user bit to another device connected via HDMI. ([On] / [Off])

Time code information is transmitted as digital data, not as an image displayed on the screen. The connected device can then refer to the digital data in order to recognize the time data.

REC Control:
Sets whether to start or stop recording on the external recorder/player remotely by operating the camera when the camera is connected to an external recorder/player. ([On] / [Off])

4ch Audio Output:
When recording audio in 4 channels, set the combination of audio channels that will be output to other devices connected via HDMI.

[CH1/CH2]: Outputs audio from channel 1 to the L (left) side and from channel 2 to the R (right) side.

[CH3/CH4]: Outputs audio from channel 3 to the L (left) side and from channel 4 to the R (right) side.

Hint

- With [REC Control] set to [On], STBY (STBY) is displayed when a recording command is ready to be sent to the external recorder/player, and REC (REC) is displayed when a recording command is being sent to the external recorder/player.
- Even when playing back a movie with 4 channels on a device connected to the HDMI terminal of the camera, the audio is output with the [4ch Audio Output] setting.

Note

- When [Rec. Media dur HDMI Output] is set to [Off(HDMI Only)], [HDMI Info. Display] becomes temporarily set to [Off].
- When [Rec. Media dur HDMI Output] is set to [Off(HDMI Only)], the counter does not move forward (the actual recording time is not counted) while the movie is being recorded on an external recorder/player.
- Regardless of the [Output Resolution] setting, the HDMI output resolution will be 1080 in the following cases.*
  - When [Log Shooting] under [Log Shooting Setting] is set to an item other than [Off]
  - When [Picture Profile] is set to PPLUT1-PPLUT4

* However, when [Rec. Media dur HDMI Output] is set to [Off(HDMI Only)], the video is output in 4K.

- [REC Control] can be used with external recorders/players that support the [REC Control] function.
- When [Time Code Output] is set to [Off], you cannot set [REC Control].
- Even when (REC) is displayed, the external recorder/player may not work properly depending on the settings or status of the recorder/player. Check if the external recorder/player works properly before use.
- When [Time Code Output] is set to [On], images may not be output properly to the TV or recording device. In this case, set [Time Code Output] to [Off].
- It is not possible to output audio in 4 channels to other devices connected via HDMI.

TP1002151177

5-069-971-11(6) Copyright 2026 Sony Corporation

HDMI Info. Display

Selects whether or not to display shooting information on a TV or a monitor device when the camera and TV, etc. are connected via an HDMI cable (sold separately).

1. **MENU → (Setup) → [External Output] → [HDMI Info. Display] → desired setting.**

Menu item details

On:
Displays the shooting information on the TV.

The recorded image and shooting information are displayed on the TV, while nothing is displayed on the camera's monitor.

Off:
Does not display the shooting information on the TV.

Only the recorded image is displayed on the TV, while the recorded image and shooting information are displayed on the camera's monitor.

Note

- If the camera is connected to a TV or monitor, etc. via an HDMI cable, the playback screen will not be displayed in the viewfinder.

TP1002110645

5-069-971-11(6) Copyright 2026 Sony Corporation

CTRL FOR HDMI

When connecting this product to a TV using an HDMI cable (sold separately), you can operate this product by aiming the TV remote control at the TV.

1. **MENU → (Setup) → [External Output] → [CTRL FOR HDMI] → desired setting.**

2. **Connect this product to a TV.**

   The input of the TV is switched automatically and images on this product are displayed on the TV screen.

   - The operation method differs depending on the TV you are using. For details, refer to the operating instructions supplied with the TV.

Menu item details

On:
You can operate this product with a TV's remote control.

Off:
You cannot operate this product with a TV's remote control.

Note

- If you connect this product to a TV using an HDMI cable, available menu items are limited.
- If the product performs unwanted operations in response to the TV remote control, set [CTRL FOR HDMI] to [Off].

TP1002110642

5-069-971-11(6) Copyright 2026 Sony Corporation

Interchangeable Lens Digital Camera
ILCE-7M5 α7V

Language

Selects the language to be used in the menu items, warnings and messages.

1. **MENU → (Setup) → [Area/Date] → [Language] → desired language.**

TP1002111089

5-069-971-11(6) Copyright 2026 Sony Corporation

Area/Date/Time Setting

You can set the area (where you are using the camera), daylight savings ([On]/[Off]), the date display format, and the date and time.
The Area/Date/Time setting screen will be displayed automatically if you did not register your smartphone in the initial setup or when the internal rechargeable backup battery has fully discharged. Select this menu to set the date and time after the first time.

1. **MENU → (Setup) → [Area/Date] → [Area/Date/Time Setting] → desired setting.**

Menu item details

Area Setting:
Sets the area where you are using the camera.

Daylight Savings:
Selects Daylight Savings [On] / [Off].

Date/Time:
Sets the date and time.

- You can switch the time display format (24-hour or 12-hour format) by pressing the (Delete) button.

Date Format:
Selects the date display format.

Hint

- To charge the internal rechargeable backup battery, insert a charged battery pack, and leave the product for 24 hours or more with the power off.
- If the clock resets every time the battery is charged, the internal rechargeable backup battery may be worn out. Consult your service facility.

Related Topic

- Performing initial setup for the camera

TP1002110647

5-069-971-11(6) Copyright 2026 Sony Corporation

Interchangeable Lens Digital Camera
ILCE-7M5 α7V

NTSC/PAL Selector

Plays back movies recorded with the product on a NTSC/PAL system TV.

1. **MENU → (Setup) → [Area/Date] → [NTSC/PAL Selector] → [Enter]**

TP1002111090

5-069-971-11(6) Copyright 2026 Sony Corporation

Audio Signal(Shooting)

Selects whether or not the camera produces a sound when it focuses and during self-timer shooting.

1. **MENU → (Setup) → [Sound Option] → [Audio Signal(Shooting)] → desired setting.**

Menu item details

On:all:
The shutter produces sounds, and sounds are produced for example when the focus is achieved by pressing the shutter button halfway down.

On:w/o shutter:
Sounds are produced when focusing by pressing the shutter button halfway down, etc. The electronic shutter does not produce any sounds.

On:shutter only:
Only the electronic shutter produces sounds. Sounds are not produced when focusing by pressing the shutter button halfway down, etc.

Off:
Sounds are not produced.

Hint

- When [Silent Mode] is set to [On], [Audio Signal(Shooting)] becomes locked to [Off].

Note

- If the focus mode is set to [Continuous AF], the camera will not beep when it focuses on a subject.

Related Topic

- Silent Mode Settings (still image/movie)

TP1002142932

5-069-971-11(6) Copyright 2026 Sony Corporation

Audio Signal(Start/End)

Sets whether or not the camera produces an electronic sound when it starts up and shuts down.

1. **MENU → (Setup) → [Sound Option] → [Audio Signal(Start/End)] → desired setting.**

Menu item details

On:
An electronic sound is produced when the camera starts up and shuts down.

Off:
An electronic sound is not produced when the camera starts up and shuts down.

Note

- When [Silent Mode] is set to [On], [Audio Signal(Start/End)] is locked to [Off].

Related Topic

- Silent Mode Settings (still image/movie)

TP1002154695

5-069-971-11(6) Copyright 2026 Sony Corporation

Audio Signal Volume

Sets the volume of audio signals from the camera, such as the shutter sound and the sound when the focus is achieved.

1. **MENU → (Setup) → [Sound Option] → [Audio Signal Volume].**

2. **Select the desired level using the left/right side of the control wheel.**
   - You can check the sound volume by pressing the (Delete) button while setting the sound volume level.

Hint

- The camera does not output audio signals when [Audio Signal Volume] is set to [0].

Note

- You cannot check the sound volume while setting the sound volume level in the following situations.
  - When [Audio Signal(Shooting)] is set to [Off]
  - When [Silent Mode] under [Silent Mode Settings] is set to [On]
  - During movie recording

TP1002158475

5-069-971-11(6) Copyright 2026 Sony Corporation

Video Light Mode

S&Q

Sets the illumination setting for the HVL-LBPC LED light (sold separately).

1. **MENU → (Setup) → [Setup Option] → [Video Light Mode] → desired setting.**

Menu item details

Power Link:
The video light turns on/off in sync with the ON/OFF operation of this camera.

REC Link:
The video light turns on/off in sync with movie recording start/stop.

REC Link&STBY:
The video light turns on when movie recording starts and dims when not recording (STBY).

Auto:
The video light automatically turns on when it is dark.

Note

- When shooting time-lapse movies, the video light will turn on/off differently according to the [Time-lapse Settings] setting. For details, see " Time-lapse Settings ."
- When shooting time-lapse movies, [Video Light Mode] cannot be set to [Auto]. It will automatically switch to [REC Link].

Related Topic

- Time-lapse Settings

TP1002142843

5-069-971-11(6) Copyright 2026 Sony Corporation

Anti-dust Function

If dust or debris gets inside the camera and adheres to the surface of the image sensor, clean the image sensor using [Sensor Cleaning]. You can also set whether or not to close the shutter when you turn off the camera so that dust or debris is prevented from adhering to the image sensor.

1. **MENU → (Setup) → [Setup Option] → [Anti-dust Function] → desired setting item.**

Menu item details

Sensor Cleaning:
The image sensor vibrates a little to shake off the dust. Use a commercially available blower to clean the image sensor surface if necessary.

Shutter When Pwr OFF:
Sets whether to close the shutter when you turn off the camera. ([On]/[Off])

- If you select [On], the shutter will close when you set the ON/OFF (power) switch to OFF while the camera is turned on. Note that it may take some time for the shutter to close after you set the ON/OFF (power) switch to OFF.
  The shutter also makes a sound when the ON/OFF (power) switch is set to ON or OFF.

Hint

- To clean the image sensor by yourself, execute [Sensor Cleaning] or set [Shutter When Pwr OFF] to [Off].

Note

- When [Shutter When Pwr OFF] is set to [On], attach the lens cap before storing the camera. Otherwise, a strong light source (such as sunlight) may become focused inside the camera, causing smoke or fire. Even if the light source is slightly away from the angle of view, it may still cause smoke or fire when the lens cap is not attached.
- Do not touch the closed shutter with your fingers or clean it with a blower. The shutter may become damaged.
- If there is a risk of water droplets adhering to the shutter, set [Shutter When Pwr OFF] to [Off]. If [Shutter When Pwr OFF] is set to [On], water droplets may adhere to the shutter and cause a malfunction.
- Make sure that the remaining battery level is 51% or more before performing [Sensor Cleaning].
- Even if [Shutter When Pwr OFF] is set to [On], the shutter will not close when the power turns off due to activation of the power-saving mode or battery exhaustion. In this case, you can close the shutter by turning the camera on and off again.

Related Topic

- Cleaning the image sensor (Sensor Cleaning)

TP1002152730

5-069-971-11(6) Copyright 2026 Sony Corporation

Auto Pixel Mapping

Sets whether or not to automatically optimize the image sensor (pixel mapping). Normally, set this function to [On].

1. **MENU → (Setup) → [Setup Option] → [Auto Pixel Mapping] → desired setting.**

Menu item details

On:
Performs pixel mapping automatically at regular intervals when you turn off the camera.
During this time, shutter sounds will be produced.
Off:
Does not perform pixel mapping automatically.

Hint

- If [Auto Pixel Mapping] is set to [Off], perform [Pixel Mapping] regularly. We recommend that you perform the operation once every three days.

Note

- If [Pixel Mapping] is not performed regularly, bright spots may appear in recorded images.

Related Topic

- Pixel Mapping
- Silent Mode Settings (still image/movie)

TP1002151164

5-069-971-11(6) Copyright 2026 Sony Corporation

Pixel Mapping

You can manually optimize the image sensor (pixel mapping). If [Auto Pixel Mapping] is set to [Off], perform [Pixel Mapping] regularly according to the following procedure. We recommend that you perform the operation once every three days.

1. **MENU → (Setup) → [Setup Option] → select [Pixel Mapping].**

2. **Select [OK] on the confirmation screen.**

   Pixel mapping will be performed.

   - The camera cannot be operated during pixel mapping.
   - The camera will restart when pixel mapping is complete.

Hint

- If you see bright spots in a recorded image on the camera monitor, immediately perform [Pixel Mapping].

Note

- Pixel mapping cannot be performed when the battery is low.
- If [Pixel Mapping] is not performed regularly, bright spots may appear in recorded images.

Related Topic

- Auto Pixel Mapping

TP1002151178

5-069-971-11(6) Copyright 2026 Sony Corporation

Version

Displays the version of this product's software. Check the version when updates for this product's software are released, etc.
Also displays the version of the lens if a lens compatible with firmware updates is attached.
The version of the Mount Adaptor is displayed in the lens area if a Mount Adaptor compatible with firmware updates is attached.

1. **MENU → (Setup) → [Setup Option] → [Version].**

   When the camera is connected to the Internet, software information is obtained. If new software is available, information about it will be displayed.

Menu item details

Body:
Displays the firmware version of the camera body.
Lens:
Displays the firmware version of the lens when a lens that supports firmware updates is attached.

Hint

- You can also save the downloaded firmware data to a memory card and use the memory card to update the firmware of the camera.

Note

- Updating can be performed only when the remaining battery level is 51% or more. Use a sufficiently charged battery pack.

TP1002153948

5-069-971-11(6) Copyright 2026 Sony Corporation

Display Serial Number

Displays the serial number of the camera.

1. **MENU → (Setup) → [Setup Option] → [Display Serial Number].**

TP1002156890

5-069-971-11(6) Copyright 2026 Sony Corporation

Privacy Notice

Displays the privacy notification screen.

1. **MENU → (Setup) → [Setup Option] → [Privacy Notice].**

TP1002154749

5-069-971-11(6) Copyright 2026 Sony Corporation

Interchangeable Lens Digital Camera
ILCE-7M5 α7V

Screen Reader

Sets the function for reading aloud information such as text on the screen.
Only some languages may be supported for this function depending on the model. This function is available only when the language set in the menu is supported by this function.

1. **MENU → (Setup) → [Accessibility] → [Screen Reader] → desired setting item.**

Menu item details

Screen Reader:
Sets whether to use the function to read aloud. ([On]/[Off])

Speed:
Sets the speed when reading aloud.

Volume:
Sets the volume when reading aloud.

MENU Long Press to Switch:
Sets whether to enable the function to switch the screen reader function on and off by pressing and holding the MENU button. ([On]/[Off])

Screen Reader Language:
Selects the language to use when reading aloud.

You can also remove any additional language that you have installed for the screen reader.

To update the screen reader data

When you update the camera's system software, you may need to update the screen reader data accordingly.
If the screen reader data needs updating, a red notification badge will appear over [Screen Reader Language] on the menu screen. In that case, update your screen reader data via the following procedure.

1. Download the audio data file "SCREADER.DAT" from the website below.
   https://www.sony.net/di-screen_reader
2. Save the audio data file "SCREADER.DAT" in the root directory of your memory card.
3. Insert the memory card containing the audio data file into the memory card slot of the camera and turn the camera on.
   A confirmation screen for updating the audio data will be displayed.
4. Select [OK].
   The update will begin.

   - Do not remove the memory card during the update.

To add a language for the screen reader

In addition to the pre-installed language, you can install one additional language as a screen reader language (this may vary depending on the country or region).
Before installing the additional language for the screen reader, be sure to update the camera's system software to the latest version.

1. Download the audio data file “SCREADER.DAT” from the website below.
   https://www.sony.net/di-screen_reader
2. Save the audio data file “SCREADER.DAT” in the root directory of your memory card.
3. Insert the memory card containing the audio data file into the memory card slot of the camera and turn the camera on.
   A confirmation screen for updating the audio data will be displayed.
4. Press the (Delete) button to display a list of languages that can be installed.
5. Select the language you want to add and follow the on-screen instructions to install it.
   A confirmation screen for changing the language setting will be displayed.
6. If you want to change the language immediately, select [OK].
   The language for the screen reader and the on-screen display will be changed simultaneously.

- Once the audio data has been installed, you will be able to change the language for the screen reader from MENU → (Setup) → [Accessibility] → [Screen Reader] → [Screen Reader Language].

Hint

- [MENU Long Press to Switch] is set to [On] in the default settings. Therefore, you can use the screen reader function by pressing and holding the MENU button on the initial setup screen of the camera. Additionally, you can switch the screen reader function on and off by pressing and holding the MENU button after the initial setup.
- You can set the camera to make a sound when it is turned on or off by setting [Audio Signal(Start/End)] to [On].
- Once the installation is complete, the audio data file on the memory card will be deleted. If you want to reinstall the audio data, save the audio data file to the memory card again.
- The screen reader data will not be deleted even if you perform [Camera Settings Reset] or [Initialize] using [Setting Reset].

Note

- If the camera’s system software is not updated, the screen reader data cannot be updated. Update the camera’s system software first.
- If the audio data file is saved anywhere other than the root directory of the memory card, the update cannot be performed.
- Do not change the file name of the audio data file.
- Updating the screen reader data will not delete the audio data file saved on the memory card. If the audio data file remains saved on the memory card, the screen for updating the screen reader data will be displayed every time the camera is turned on. Once the screen reader data update is complete, delete the audio data file saved on the memory card using a computer or other device.

TP1002153980

5-069-971-11(6) Copyright 2026 Sony Corporation

Enlarge Screen

You can enlarge the menu screen display. (Some menu screens do not support the enlarging function.)

1. **MENU → (Setup) → [Accessibility] → [Enlarge Screen] → Select an item to set, and then select the desired setting.**

Menu item details

Enlarge Menu Scrn:
Sets whether or not to use the function to enlarge the screen display. ([Off]/[On (Custom Btn 2)])
When you select [On (Custom Btn 2)], the screen display is enlarged by pressing the C2 button (Custom button 2).

Magnification:
Sets the magnification to use for the function to enlarge the screen display. ([x1.5]/[x2.0]/[x2.5])

To magnify the menu screen display

On the menu screen, press the button specified in [Enlarge Menu Scrn] to magnify the screen display.

- You can move the displayed position using the multi-selector, front dial, rear dial L, or rear dial R or by turning the control wheel.
- Each time you press the button, the magnification scale changes.
- To cancel the magnified display, press the button repeatedly until the screen display is back to normal.

Hint

- You can move between items using the top/bottom/left/right side of the control wheel even when the screen display is magnified. You can also confirm items using the center button.
- You can move the displayed position using touch operations while the screen display is magnified when [Touch Operation] is set to [On] and [Menu Screen] under [Touch Panel Settings] is set to [On].
- You can also assign [Enlarge Menu Scrn] to some buttons using [Custom Key/Dial Set.]/[Custom Key/Dial Set.].
- A message confirming whether to set [Select Finder/Monitor] to [Monitor(Manual)] appears when [Enlarge Menu Scrn] is set to anything other than [Off]. It is recommended that you set [Select Finder/Monitor] to [Monitor(Manual)] while using the [Enlarge Screen] function to prevent the eye sensor from activating and switching to the viewfinder display when you bring your face close to the monitor.
  To restore the setting for [Select Finder/Monitor], select [Select Finder/Monitor] and change the setting.

Related Topic

- Assigning frequently used functions to buttons and dials (Custom Key/Dial Set.)
- Select Finder/Monitor

TP1002158476

5-069-971-11(6) Copyright 2026 Sony Corporation

Mode Dial Control Set

If you have difficulty operating the dial on your camera, you can change settings using menu operations instead of dial operations.

1. **MENU → (Setup) → [Accessibility] → [Mode Dial Control Set] → desired setting item.**

Menu item details

Shooting Mode Dial:

Sets whether to change the shooting mode using the mode dial or the menu. ([Set with Dial]/[Set with Menu])

By selecting [Set with Menu], you can change the shooting mode using [Shoot Mode] in the menu.

Note

- When [Set with Menu] is selected, operation using the mode dial on the camera is disabled.

Related Topic

- Selecting a shooting mode using menu operations (Shoot Mode)

TP1002161103

5-069-971-11(6) Copyright 2026 Sony Corporation

Certification Logo (For some models only)

Displays some of the certification logos for this product.
This function is available on products sold in some countries and regions only.

1. **MENU → (Setup) → [Setup Option] → [Certification Logo].**

TP1002110656

5-069-971-11(6) Copyright 2026 Sony Corporation

Interchangeable Lens Digital Camera
ILCE-7M5 α7V

Save/Load Settings

You can save/load camera settings to/from a memory card. You can also load settings from another camera of the same model.

1 **MENU → (Setup) → [Reset/Save Settings] → [Save/Load Settings] → desired item.**

Menu item details

Load:
Loads the settings from a memory card to this camera.

Save:
Saves the current settings of this camera to a memory card.

Delete:
Deletes the settings saved on a memory card.

Settings that cannot be saved

The following setting parameters cannot be saved using the [Save/Load Settings] function. (Menu items without setting parameters, such as, [Focus Magnifier], are not listed.)

/ (Shooting)
IPTC Information
Copyright Info

(Exposure/Color)
External Flash Set.
White Balance: Custom 1/Custom 2/Custom 3

AF MF (Focus)

Face Memory

(Network)
FTP Transfer Func.*
Network Streaming
Cloud Connection
WPS Push
Access Point Set.
Wi-Fi Frequency Band
LAN IP Address Setting
Edit Device Name
Import Root Certificate
Access Authen. Settings

* You can save or load settings under [FTP Transfer Func.] by selecting MENU → (Network) → [FTP Transfer] → [FTP Transfer Func.] → [Save/Load FTP Settings]. For details, refer to the “FTP Help Guide.”
https://rd1.sony.net/help/di/ftp_2540/h_zz/

(Setup)
Language
Area/Date/Time Setting

Note

- You can save up to 10 settings per memory card. When 10 settings have been already saved, you cannot perform [Save New]. Delete the existing settings using [Delete], or overwrite them.
- Only Slot 1 is used for saving or loading data. You cannot change the saving/loading destination slot.
- You cannot load settings from a camera of a different model.
- Even if the model name is the same, settings from a camera with a different system software version may fail to load.
- You can use this function to save settings registered to [MR Camera Set. Memory]. However, [Save/Load Settings] is unavailable when the mode dial is set to 1/2/3 (MR Recall Camera Setting). Set the mode dial to a position other than 1/2/3 before using this function.

TP1002150224

5-069-971-11(6) Copyright 2026 Sony Corporation

Setting Reset

Resets the product to the default settings. Even if you perform [Setting Reset], the recorded images are retained.

1. **MENU → (Setup) → [Reset/Save Settings] → [Setting Reset] → desired setting.**

Menu item details

Camera Settings Reset:
Initializes the main shooting settings to the default settings. The setting values for both still image shooting and movie recording are initialized.

Initialize:
Initializes all the settings to the default settings.

Note

- Be sure not to eject the battery pack while resetting.
- If you perform [Initialize], the privacy notice agreement will also be initialized, so agree to the privacy notice again before using the camera.
- The settings for [Picture Profile] are not reset even when [Camera Settings Reset] or [Initialize] is performed, except the settings for PPLUT 1 - 4.
- The check mark for [Picture Profile] in [Different Set for Still/Mv] is not reset when you perform either [Camera Settings Reset] or [Initialize].
- The security and network settings are not deleted when you perform [Camera Settings Reset].
- To reset the security and network settings to the default settings, perform either [Reset Network Set.] or [Initialize]. However, even if you perform [Reset Network Set.] when [Airplane Mode] is set to [On], [Airplane Mode] will not be reset to [Off].

TP1002110657

5-069-971-11(6) Copyright 2026 Sony Corporation

Functions available with a smartphone (Creators' App)

Using the smartphone application Creators' App, you can shoot an image while controlling the camera using a smartphone or transfer the images recorded on the camera to the smartphone.
Download and install the application Creators' App from your smartphone's application store. If Creators' App is already installed on your smartphone, be sure to update it to the latest version.
For details on Creators' App, refer to the following website.
https://www.sony.net/ca/

Hint

- You can also install Creators' App by scanning the QR Code displayed on the screen of the camera using your smartphone.

Note

- Depending on future version upgrades, the operational procedures or screen displays are subject to change without notice.

Supported smartphones

Refer to the support page for the latest information.
https://www.sony.net/ca/help/mobile/

- For details on Bluetooth versions compatible with your smartphone, check the product website for your smartphone.

TP1002134049

5-069-971-11(6) Copyright 2026 Sony Corporation

Monitor & Control

Monitor & Control is a smartphone application that supports monitoring and remote shooting functions required for movie shooting.
Monitor & Control provides detailed live view and remote shooting controls by using the screen of your smartphone as a monitor for movie shooting.

Download and install the application Monitor & Control from your smartphone's application store. If Monitor & Control is already installed on your smartphone, be sure to update it to the latest version.
For details on Monitor & Control, refer to the following website.
https://www.sony.net/ccmc/

TP1002158515

5-069-971-11(6) Copyright 2026 Sony Corporation

Interchangeable Lens Digital Camera
ILCE-7M5 α7V

Pairing the camera with a smartphone (Smartphone Connection)

Connects the camera to your smartphone (pairing) to use the smartphone application Creators' App.

If you did not connect the camera with your smartphone when you turned on the camera for the first time, perform the following procedure.
The following is the procedure for connecting the camera to your smartphone when you install Creators' App on your smartphone for the first time.
: Operations performed on the smartphone
: Operations performed on the camera

1. **: On the camera, select MENU → (Network) → [Cnct./Remote Sht.] → [Smartphone Connection].**

2. **: Follow the instructions on the screen and set [Bluetooth Function] to [On].**

   A screen for waiting for a connection from the app will appear.

   - If [Bluetooth Function] is already set to [On], the screen for waiting for a connection from the app will appear immediately.

3. **: Launch Creators' App on your smartphone.**

4. **: Follow the instructions on the screen to pair the camera with your smartphone.**

   - When the connection is completed, a menu to select a function for the camera appears on the smartphone.

5. **: On the smartphone screen, select the desired function.**

Connecting to a smartphone via a Wi-Fi access point

After pairing in steps 1 to 4, connect the camera and smartphone to the same Wi-Fi access point by selecting MENU on the camera → (Network) → [Wi-Fi] → [Wi-Fi Connect] → [On]. After that, follow the instructions on the smartphone screen to connect the camera and smartphone.

If you have used Creators' App with other cameras

Launch Creators' App after Step 2, open the [Cameras] screen, select the (Add Camera) button, and follow the instructions on the screen to continue the operation.

About the icons when connecting to a smartphone

Bluetooth connection available / Bluetooth connection unavailable

Connected to Wi-Fi (via a Wi-Fi access point)

Disconnected from Wi-Fi (via a Wi-Fi access point)

Wi-Fi Wi-Fi

Connected to Wi-Fi/Disconnected from Wi-Fi (Wi-Fi Direct)

Connecting the camera and smartphone without pairing

If you want to connect without pairing, you need to perform the Wi-Fi connection operation every time. In addition, some functions are limited when only using a Wi-Fi connection.

1. On the camera, select MENU → (Network) → [Cnct./Remote Sht.] → [Smartphone Connection].
2. Press the (Delete) button on the camera to switch to the screen for Wi-Fi connections.
   The SSID and password will be displayed.
3. Open the Wi-Fi setting screen on your smartphone.
4. On the Wi-Fi setting screen on your smartphone, select the SSID displayed on the camera and enter the password.
5. Launch Creators' App on your smartphone and open the [Cameras] screen.
6. Select the (Setup) button in the upper right corner of the [Cameras] screen, and then select [Connect only via Wi-Fi].
7. On the screen of Creators' App on your smartphone, select the product name of the camera (ILCE-7M5).
   The smartphone will connect to the camera.

Note

- To ensure a secure wireless LAN connection, we strongly recommend using an access point with WPA3 or WPA2 security settings. Connecting to an access point without security settings may result in hacking, access from malicious third parties, or attacks on vulnerabilities. Unless there is a specific reason, we do not recommend using an access point without security settings.
- When establishing a Bluetooth connection, only pair with trusted devices. Avoid unsolicited pairing requests or connections to unknown devices.
- Turn off the Bluetooth function when not in use.
- Check your paired devices regularly and delete any unnecessary ones.
- [Smartphone Connection] cannot be executed when [Airplane Mode] is set to [On].
- Up to 2 devices can be connected to the camera at the same time using Bluetooth communication.
- Radio wave interference may occur as Bluetooth communications and Wi-Fi (2.4 GHz) communications use the same frequency band. If your Wi-Fi connection is unstable, it may be improved by turning off the Bluetooth function of the smartphone.
- The Bluetooth icon is not displayed when the touch function icons are displayed in the movie recording mode. To see the Bluetooth icon, swipe the touch function icons left or right to hide the touch function icons.

Related Topic

- Functions available with a smartphone (Creators' App)
- Using a smartphone as a remote commander
- Select on Cam & Send (transferring to a smartphone)
- Cnct. while Power OFF (smartphone)
- Reading location information from a smartphone

TP1002153976

5-069-971-11(6) Copyright 2026 Sony Corporation

Using a smartphone as a remote commander

With Creators' App, you can shoot images while checking the shooting range of the camera on the screen of the smartphone. Connect the camera and smartphone by referring to "Related Topic" at the bottom of this page. For details on functions that can be operated from a smartphone, refer to the following website.
https://www.sony.net/ca/help/opr/

Related Topic

- Pairing the camera with a smartphone (Smartphone Connection)
- Remote Shoot Setting

TP1002151180

5-069-971-11(6) Copyright 2026 Sony Corporation

Remote Shoot Setting

Configures settings for images saved when performing remote shooting using a smartphone or computer.

1. **MENU → (Network) → [Cnct./Remote Sht.] → [Remote Shoot Setting] → desired setting item.**

Menu item details

Still Img. Save Dest.:
Sets the save destination. ([Destination Only]/[Dest.+Camera]/[Camera Only])

Save Image Size:
Selects the file size for images to be transferred to the smartphone or the computer when [Still Img. Save Dest.] is set to [Dest.+Camera]. The original-sized JPEG/HEIF file or a 2M-equivalent JPEG/HEIF file can be transferred. ([Original]/[2M])

RAW+J Save Image:
Selects the file type for images to be transferred to the smartphone or the computer when [Still Img. Save Dest.] is set to [Dest.+Camera] and [File Format] is set to [RAW & JPEG]. ([RAW & JPEG]/[JPEG Only]/[RAW Only])

RAW+H Save Image:
Selects the file type for images to be transferred to the smartphone or the computer when [Still Img. Save Dest.] is set to [Dest.+Camera] and [File Format] is set to [RAW & HEIF]. ([RAW & HEIF]/[HEIF Only]/[RAW Only])

Save JPEG Size/Save HEIF Size:
Use this item when sorting and saving JPEG/HEIF images with different image quality and image sizes to Slot 1 and Slot 2 by setting [Recording Media] to [Sort Recording]. Among the different sizes of image to be saved to Slot 1 and Slot 2, selects whether the larger or smaller size will be transferred to the smartphone or the computer when [Still Img. Save Dest.] is set to [Destination Only] or [Dest.+Camera]. ([Large Size]/[Small Size])

Note

- When an unrecordable memory card is inserted into the camera, you cannot record still images even if [Still Img. Save Dest.] is set to [Camera Only] or [Dest.+Camera].
- When [Camera Only] or [Dest.+Camera] is selected for [Still Img. Save Dest.] and no memory card is inserted into the camera, the shutter will not be released even if [Release w/o Card] is set to [Enable].
- While a still image is being played back on the camera, you cannot perform remote shooting using a smartphone or a computer.
- [RAW+J Save Image] and [RAW+H Save Image] can be set only when [File Format] is set to [RAW & JPEG] or [RAW & HEIF].

Related Topic

- Using a smartphone as a remote commander
- Rec. Media Settings (still image/movie): Recording Media (still image)

TP1002152731

5-069-971-11(6) Copyright 2026 Sony Corporation

Select on Cam & Send (transferring to a smartphone)

You can transfer images to a smartphone by selecting images on the camera.
Refer to "Pairing the camera with a smartphone (Smartphone Connection) " to pair the camera and smartphone in advance.

The following is the procedure for transferring the image currently displayed on the camera.

1. **MENU → (Network) → [Cnct./Remote Sht.] → [Select on Cam & Send] → [Size of Sending Image], [RAW+J/H Send Target], [Px Sending Target] and [Movie with Shot Mark] → desired setting.**

2. **Display the image to be transferred on the playback screen.**

3. **MENU → (Network) → [Cnct./Remote Sht.] → [Select on Cam & Send] → [Send] → [This Image].**

4. **Launch Creators' App on your smartphone.**

   A message indicating that the transfer has started will appear.

5. **Select [OK] on the smartphone.**

   The image will be transferred to the smartphone.
   - Even while a transfer is in progress, you can perform the following operations:
     - Shooting
     - Menu Operations
     - Pausing an ongoing transfer
     - Resuming or canceling a paused transfer
     - Scheduling additional transfers
   - The (transferred) icon will be displayed on images that have been transferred.
   - You can transfer multiple images at once by selecting a setting other than [This Image] under [Send].

Menu item details

Send:
Selects images and transfers them to a smartphone. ([This Image]/[All Images in This Group]/[All with this date]/[All Filtered]/[Add filter condition]/[Manual selection])

- The options displayed may differ depending on the setting for [Playback Filter Condition] and the selected content.
- If you select [Manual selection], select the desired images using the center of the control wheel, then press MENU → [Enter]. You can also specify the range using the Fn (Function) button.
- When [Disp Set of Multi Media] is set to [All Slots], only [This Image] can be selected.

Size of Sending Image:
Selects the file size for images to be transferred to the smartphone. The original-sized JPEG/HEIF file or a 2M-equivalent JPEG/HEIF file can be transferred. ([Original]/[2M])

RAW+J/H Send Target:

Selects the file type for images to be transferred to a smartphone when the images are shot with [File Format] set to [RAW & JPEG] or [RAW & HEIF]. ([JPEG & HEIF]/[RAW]/[RAW+J & RAW+H])

Px Sending Target:

Sets whether to transfer the low-bit-rate proxy movie or the high-bit-rate original movie when transferring a movie to a smartphone. ([Proxy Only]/[Original Only]/[Proxy & Original])

When you select [Proxy Only], movies can be transferred faster than when transferring the original movies.

Movie with Shot Mark:

Cuts and transfers a specified number of seconds from a movie with the position of a Shot Mark set as the center. ([Cut to 60 seconds]/[Cut to 30 seconds]/[Cut to 15 seconds]/[Don't Cut])

To filter the images to be transferred (Add filter condition)

Images to be transferred can be filtered by the following conditions:

- Target Group: [This Date]/[This Media]
- Still Images/Movies: [All]/[Only Still Images]/[Only Movies]
- Target Img (Rating): [★]-[★★★], [★OFF]
- Target Movie (S): [All]/[Only Shot Mark Mov.]
- Target Img (Protect): [All]/[Only Protected Img.]
- Transfer Status *: [All]/[Only Non-transfer]

  * Images transferred by selecting them on the smartphone are treated as not yet transferred.
  * When [Movie with Shot Mark] is set to an item other than [Don't Cut], even if you have already transferred a clip by using a Shot Mark and then set another Shot Mark to the movie, all of the Shot Marks will create clips which will be retransferred as not-yet transferred images.

To add a Shot Mark to a movie

If you add a Shot Mark while recording a movie, you can use it as a mark for selecting, transferring, or editing the movie. To add a Shot Mark during recording, swipe left or right on the screen to display the touch function icons, and then touch S1 (Add Shot Mark1). You can also add a Shot Mark during playback by touching S1 (Add Shot Mark1) on the screen.

About the transfer icons

- Current transfer status icons

  (Transferring): Images are being transferred to your smartphone.

  (Transfer error)*: The connection was lost while transferring images to the smartphone by operating the camera. You can check the details of the error by opening the [Select on Cam & Send] menu.

  * If a transfer error occurs while transferring images by operating the smartphone, this icon will not be displayed.

- Transfer status icons on played-back images

  (Transferring): The image currently being played back is being transferred to your smartphone.

  (Transferred)*: The image currently being played back has been transferred to the smartphone.

  * For images transferred by selecting them on the smartphone, this icon will not be displayed.

Hint

- Even if a transfer stops due to a network failure, you can simply resume the transfer from the camera once the connection is restored, and the remaining images will then be transferred.
- To use the touch function icons, enable touch operations during shooting or playback by configuring each setting in MENU → (Setup) → [Touch Operation] → [Touch Panel Settings].
- While the playback filter function is used, you can set the filtered images as the target to transfer by selecting [All Filtered] in [Send].
- Use a custom key or the shutter button to add a second Shot Mark (Shot Mark 2). Shot Mark 1 can also be added using a custom key or the shutter button.

- When adding a Shot Mark with a custom key: assign [Add Shot Mark1] or [Add Shot Mark2] in [Custom Key/Dial Set.] and press the assigned button while shooting.
- When adding a Shot Mark with the shutter button: set [S with Shutter Button] to [Add Shot Mark1] or [Add Shot Mark2] and press the shutter button while shooting.
- When adding a Shot Mark while playing back a movie: assign [Add/Delete Shot Mark1] or [Add/Delete Shot Mark2] in [Custom Key Setting] and press the assigned button during playback.

- For movies with a Shot Mark, you can jump to the position with the Shot Mark by touching the touch function icon while paused.

Note

- Transfers initiated from the smartphone cannot be paused or canceled on the camera.
- While transferring images by operating your smartphone, you can schedule additional transfers from the camera, but it may take some time before the transfer begins.
- Even if you cancel the transfer midway, the images that have already been transferred will remain.
- If the camera is turned off, restarted, or disconnected during a transfer, the transfer will be paused.
- Depending on the smartphone, the transferred movie may not be played back correctly. For example, the movie may not play smoothly, or there may be no sound.
- Depending on the format of the still image, movie, slow-motion movie, or quick-motion movie, it may not be possible to play it back on a smartphone.
- When [Airplane Mode] is set to [On], you cannot connect this product and the smartphone. Set [Airplane Mode] to [Off].
- When establishing a Bluetooth connection, only pair with trusted devices. Avoid unsolicited pairing requests or connections to unknown devices.
- Turn off the Bluetooth function when not in use.
- Check your paired devices regularly and delete any unnecessary ones.
- After you delete the pairing information for the camera from your smartphone, delete pairing information for the smartphone from the camera using [Manage Paired Device].

Related Topic

- Functions available with a smartphone (Creators' App)
- Pairing the camera with a smartphone (Smartphone Connection)
- Playback Filter Condition
- Airplane Mode

TP1002152732

5-069-971-11(6) Copyright 2026 Sony Corporation

Reset Transfer Status (transferring to a smartphone)

You can reset the transfer status of images that have been transferred to your smartphone. Use this function if you want to retransfer images that have previously been transferred. The transferred images will not be deleted even if you reset the transfer status.

1. **MENU → (Network) → [Cnct./Remote Sht.] → [Reset Transfer Status].**
   - If you press [OK] on the confirmation screen, all images that have been transferred to your smartphone will become untransferred images.

Hint

- If there are images being transferred or scheduled to be transferred, you cannot execute [Reset Transfer Status]. Wait until all transfers are complete before resetting.

Related Topic

- Select on Cam & Send (transferring to a smartphone)

TP1002153957

5-069-971-11(6) Copyright 2026 Sony Corporation

Interchangeable Lens Digital Camera
ILCE-7M5 α7V

Cnct. while Power OFF (smartphone)

Sets whether or not to accept Bluetooth connections from a smartphone while the camera is turned off. When [Cnct. while Power OFF] is set to [On], you can browse images on the camera's memory card and transfer images from the camera to a smartphone by operating the smartphone.

1. **MENU → (Network) → [Cnct./Remote Sht.] → [Cnct. while Power OFF] → desired setting.**

Menu Item Details

On :
Accepts Bluetooth connections from a smartphone while the camera is turned off.
The battery level is depleted gradually while the camera is turned off. If you do not want to use [Cnct. while Power OFF], turn it off.

Off :
Does not accept Bluetooth connections from a smartphone while the camera is turned off.

How to browse/transfer images on the smartphone

Refer to "Pairing the camera with a smartphone (Smartphone Connection) " to pair the camera and smartphone in advance.

1. Set [Cnct. while Power OFF] to [On].
2. Turn off the camera.
3. Launch Creators' App on the smartphone.
4. Select [Import] on the [Cameras] screen of Creators' App.
   - The images saved on the memory card of the camera can be viewed and are ready to be transferred.

Note

- If the smartphone is not operated for a certain period of time, the Bluetooth connection will become deactivated. Select [Import] again on the smartphone.
- When the camera is turned on, the camera will switch to the shooting screen, and the connection with the smartphone will be terminated.
- [Cnct. while Power OFF] will be set to [Off] if you cancel pairing between the camera and the smartphone or pairing fails.
- If the function does not work properly, check the following notes and then try pairing again.
  - Ensure that the camera is either not connected to any other device or connected to only one device using Bluetooth communication. (Up to 2 devices can be connected to the camera at the same time.)
  - Confirm that [Airplane Mode] for the camera is set to [Off].
  - Delete the pairing information for the camera registered in the Bluetooth settings on your smartphone.
  - If the function does not work properly even after you have performed the above operations, delete the pairing information for the device that you want to connect using [Manage Paired Device] on the camera.
- When establishing a Bluetooth connection, only pair with trusted devices. Avoid unsolicited pairing requests or connections to unknown devices.
- Turn off the Bluetooth function when not in use.
- Check your paired devices regularly and delete any unnecessary ones.

- After you delete the pairing information for the camera from your smartphone, delete pairing information for the smartphone from the camera using [Manage Paired Device].

Related Topic

- Functions available with a smartphone (Creators' App)
- Pairing the camera with a smartphone (Smartphone Connection)
- Select on Cam & Send (transferring to a smartphone)
- Bluetooth Settings

TP1002150223

5-069-971-11(6) Copyright 2026 Sony Corporation

Reading location information from a smartphone

You can use the application Creators' App to obtain location information from a smartphone that is connected with your camera using Bluetooth communication. You can record the obtained location information when shooting images. Refer to "Pairing the camera with a smartphone (Smartphone Connection) " to pair the camera and smartphone in advance.

1. **Launch Creators' App on your smartphone, open the [Cameras] screen, and tap [Setup] → [Location Information Linkage].**

2. **Activate [Location Information Linkage] on the [Location Information Linkage] setting screen of Creators' App.**
   - (obtaining location information icon) will be displayed on the monitor of the camera. Location information obtained by your smartphone using GPS, etc., will be recorded when shooting images.
   - When you activate [Auto Time Correction] or [Auto Area Adjustment] on a linked smartphone, the camera automatically corrects the date setting or area setting using information from the smartphone.

Icons displayed when obtaining the location information

(Obtaining location information): The camera is obtaining the location information.
(Location information cannot be obtained): The camera cannot obtain the location information.

Hint

- Location information can be linked when Creators' App is running on your smartphone even if the smartphone monitor is off. However, if the camera has been turned off for a while, location information may not be linked immediately when you turn the camera back on. In this case, location information will be linked immediately if you open the Creators' App screen on the smartphone.
- When Creators' App is not operating, such as when the smartphone is restarted, launch Creators' App to resume location information linking.
- If the location information linking function does not work properly, see the following notes and perform pairing again.
  - Confirm that the Bluetooth function of your smartphone is activated.
  - Ensure that the camera is either not connected to any other device or connected to only one device using Bluetooth communication. (Up to 2 devices can be connected to the camera at the same time.)
  - Confirm that [Airplane Mode] for the camera is set to [Off].
  - Delete the pairing information for the camera registered in Creators' App.
  - Delete the pairing information for the camera registered in the Bluetooth settings on your smartphone.
  - Delete the pairing information for your smartphone registered in [Manage Paired Device] on the camera.
- The Bluetooth icon is not displayed when the touch function icons are displayed in the movie recording mode. To see the Bluetooth icon, swipe the touch function icons left or right to hide the touch function icons.

Note

- If you publish or share still images or movies taken with this camera on the internet while location information is linked using Creators' App, the shooting location may be unintentionally made known to third parties. In this case, turn off [Location Information Linkage] in Creators' App before shooting the images.
- When you initialize the camera, the pairing information is also deleted. Before performing pairing again, first delete the pairing information for the camera registered in the smartphone's Bluetooth settings and Creators' App.

- The location information will not be recorded when it cannot be obtained, such as when the Bluetooth connection is disconnected.
- The camera can be paired with up to 15 Bluetooth devices, but can link the location information with that of only one smartphone. If you want to link the location information with that of another smartphone, turn off the [Location Information Linkage] function under [Setup] in Creators' App on the smartphone that is already linked.
- If the Bluetooth connection is unstable, remove any obstacles, such as people or metal objects from between the camera and the paired smartphone.
- The communication distance for the Bluetooth connection or Wi-Fi may vary depending on the conditions of use.

Related Topic

- Functions available with a smartphone (Creators' App)
- Pairing the camera with a smartphone (Smartphone Connection)
- Bluetooth Settings

TP1002153951

5-069-971-11(6) Copyright 2026 Sony Corporation

Interchangeable Lens Digital Camera
ILCE-7M5 α7V

Recommended computer environment

You can confirm the operating computer environment of the software from the following URL:
https://www.sony.net/pcenv/

TP1002142887

5-069-971-11(6) Copyright 2026 Sony Corporation

Connecting the camera to a computer

1. **Insert a sufficiently charged battery pack into the camera.**

2. **Turn on the camera and the computer.**

3. **Select (Setup) → [USB] → [USB Cnct Mode (PORT1)]/[USB Cnct Mode (PORT2)] and then set the USB connection mode of the USB Type-C terminal you want to use to [MassStorage(MSC)] or [Sel. When Connect].**
   - If you have selected [Sel. When Connect], select [Image Transfer (MSC)] on the USB connection mode selection screen that appears when you connect the camera to the computer.

4. **Connect the USB Type-C terminal on the camera to the computer with a USB cable (commercially available).**
   - Only the USB Type-C terminal of USB PORT 1 supports SuperSpeed USB 10 Gbps (USB 3.2). It is recommended to use USB PORT 1 when connecting the camera to a computer.
   - You can also connect the camera to a computer using USB PORT 2, but USB communication will be Hi-Speed USB (USB 2.0) communication.

   - When you connect the camera to the computer for the first time, the procedure for recognizing the camera may start automatically on the computer. Wait until the procedure is finished.
   - Depending on the setting for [USB Power Supply], when you connect the camera to your computer with a USB cable, power will be supplied from your computer. Since [USB Power Supply] is set to [Auto] in the default settings, power supply will start when you establish a USB connection only with the computer. You can set which USB Type-C terminal to use for power supply using [USB Power Supply].
   - Use a cable that complies with the USB standard.
   - Use a SuperSpeed USB 10 Gbps (USB 3.2)-compatible computer and a commercially available USB cable for higher-speed communications.

Note

- Do not turn on/off or restart the computer, or wake the computer from sleep mode when a USB connection has been established between the computer and the camera. Doing so may cause a malfunction. Before turning on/off or restarting the computer, or waking the computer from sleep mode, disconnect the camera from the computer.

Related Topic

- Importing still images/movies to a computer
- USB Cnct Mode (PORT1)/USB Cnct Mode (PORT2)
- USB LUN Setting

TP1002110690

5-069-971-11(6) Copyright 2026 Sony Corporation

Disconnecting the camera from the computer

Perform the following operations on the computer before disconnecting the camera from the computer.

1. **Click (Safely Remove Hardware and Eject Media) in the taskbar.**

2. **Click the displayed message.**

   The following operations are available after you have completed the steps above.

   - Disconnecting the USB cable.
   - Removing a memory card.
   - Turning off the camera.

Note

- On Mac computers, drag and drop the memory card icon or the drive icon into the “Trash” icon. The camera will be disconnected from the computer.
- On some computers, the disconnection icon may not appear. In this case, you can skip the steps above.
- Do not remove the USB cable from the camera while the access lamp is lit. The data may be damaged.

TP1002110692

5-069-971-11(6) Copyright 2026 Sony Corporation

Importing still images/movies to a computer

You can import still images and movies you have shot to a computer without using a computer application.

How to import images to a computer

There are two methods of importing still images/movies, as follows.

- **To import images using a USB cable**
- **To import images from a memory card**

How to browse still images/movies on a computer

You can directly browse still images/movies on the memory card using Explorer (Windows) or Finder (Mac).

To import images using a USB cable

1. Connect the camera to a computer.
   Connect the camera to a computer using a USB cable. For details, refer to "Connecting the camera to a computer."
   When the connection is successful, the following screen will be displayed on the camera.

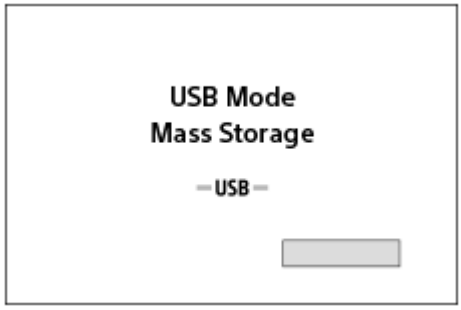

2. Perform operations on the computer.
   Browse the storage of the camera using Explorer (Windows) or Finder (Mac).
   Open the image folder in the storage of the camera, select the images, and then copy them to your computer.

   Example of the folder structure

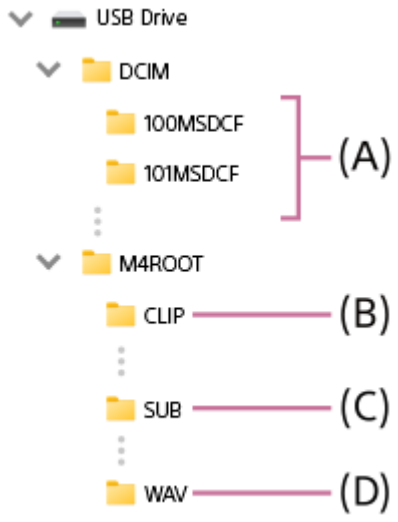

(A) Still images are saved in each folder within the “DCIM” folder.
(B) Movies are saved in the “CLIP” folder within the “M4ROOT” folder.
(C) Proxy movies are saved in the “SUB” folder within the “M4ROOT” folder.
(D) Audio files in the WAV format are saved in the “WAV” folder within the “M4ROOT” folder. *1 *2

*1 When an accessory that supports audio recording in the WAV format is attached to the Multi Interface Shoe
*2 When the camera’s system software (firmware) version is Ver.2.00 or later

To import images from a memory card

1. Eject the memory card from the camera.
   Open the memory card cover on the camera and eject the memory card.

2. Read the memory card on your computer.
   Insert the memory card into a commercially available card reader and connect the card reader to your computer.
   When you are using an SD card and if your computer has an SD card slot, insert the SD card directly into the slot.

3. Perform operations on the computer.
   Browse the memory card drive using Explorer (Windows) or Finder (Mac).
   Open the image folder on the memory card drive, select the images, and then copy them to your computer.
   For details on the folder structure, see step 2 of “To import images using a USB cable.”

Hint

- To import images to the computer via a wireless connection, use the following methods.
  - Upload images to the cloud service using a smartphone application and then import them to the computer.
  - Import images to the computer using the FTP transfer function.

Note

- Do not edit or otherwise process movie files/folders from the connected computer. Movie files may be damaged or become unplayable. Do not delete movies on the memory card from the computer. Sony is not held liable for consequences resulting from such operations via the computer.
- If you delete images or perform other operations from the connected computer, the image database file may become inconsistent. In this case, repair the image database file.

Related Topic

- Connecting the camera to a computer
- Disconnecting the camera from the computer
- Introduction to desktop application (Imaging Edge Desktop/Catalyst)
- Functions available with a smartphone (Creators' App)
- FTP Transfer Func.
- Recover Image DB (still image/movie)

TP1002321082

5-069-971-11(6) Copyright 2026 Sony Corporation

Introduction to desktop application (Imaging Edge Desktop/Catalyst)

Imaging Edge Desktop

Imaging Edge Desktop is a desktop application that integrates the three functions of the Imaging Edge series: “Remote,” “Viewer,” and “Edit.”
It allows you to view and develop RAW images taken by the camera on your computer and control the camera remotely from your computer to shoot images.

For details on how to use Imaging Edge Desktop, refer to the support page.
https://www.sony.net/disoft/help/

Installing Imaging Edge Desktop on your computer
Download and install the application by accessing the following URL:
https://www.sony.net/disoft/d/

Catalyst Browse (free software)/Catalyst Prepare (paid software)

Catalyst Browse is application for previewing clips. You can preview recorded XAVC S/XAVC HS clips, view and edit media metadata, apply image stabilization* using metadata, apply color calibration, copy to the local hard drive, or transcode to a variety of formats and so on with Catalyst Browse.
Catalyst Prepare adds to the functions of Catalyst Browse allowing you to organize clips using bins, perform basic timeline editing with storyboards, and so on.

* For the conditions of use of the image stabilization function, refer to the support page.

Installing Catalyst Browse/Catalyst Prepare on your computer
Download and install the application by accessing the following URL:
https://www.sony.net/catalyst/

TP1002151181

5-069-971-11(6) Copyright 2026 Sony Corporation

Interchangeable Lens Digital Camera
ILCE-7M5 α7V

Operating the camera from a computer (Remote Shoot Function)

Uses a Wi-Fi or USB connection, etc. to control the camera from a computer, including such functions as shooting and storing images on the computer.
When the camera and a smartphone are connected, you cannot control the camera from a computer. Make sure that the camera is not connected to a smartphone beforehand.
For details on [Remote Shoot Function], refer to the following URL:
https://support.d-imaging.sony.co.jp/app/imagingedge/l/instruction/4_1_connection/index.php
The following is the procedure for connecting the camera to your computer using a Wi-Fi connection via a Wi-Fi access point. If you will use another connection method, refer to “How to connect the camera and the computer using a method other than a Wi-Fi access point.”

1. **Select MENU → (Network) → [Wi-Fi] → [Wi-Fi Connect] → [On] to connect the camera to the Wi-Fi access point.**
   - Connect the computer to the same Wi-Fi access point.
2. **Select MENU → (Network) → [Cnct./Remote Sht.] → [Remote Shoot Function] → [Remote Shooting] → [On].**
3. **Select [Access Authen. Info] to display the information such as the username, password, and fingerprint.**
   - You can check the information by selecting MENU → (Network) → [Network Option] → [Access Authen. Info].
4. **Launch Imaging Edge Desktop (Remote) on the computer, and then enter and confirm the access authentication information.**

   You can now operate the camera using Imaging Edge Desktop (Remote).

Menu item details

Remote Shooting:
Sets whether or not to use the Remote Shooting function. ([On] / [Off])
Wi-Fi Direct Info.:
Displays information for connecting the computer and the camera via Wi-Fi Direct.

How to connect the camera and the computer using a method other than a Wi-Fi access point

When connecting with Wi-Fi Direct
Use the camera as an access point, and connect the computer to the camera directly via Wi-Fi.
Select MENU → (Network) → [Cnct./Remote Sht.] → [Remote Shoot Function] → [Wi-Fi Direct Info.] to display the Wi-Fi connection information (SSID and password) for the camera. Connect the computer and the camera using the Wi-Fi connection information displayed on the camera.
When connecting with a USB cable
Connect the USB Type-C terminal on the camera to the computer with a USB cable (commercially available).
Next, select [Remote Shoot/Trn.] on the screen displayed on the camera.

Hint

- In [Remote Shoot Setting] under [Cnct./Remote Sht.], you can set the save destination and saved format of still images for remote shooting.

Note

- If unauthorized access is detected, the camera may stop accepting communication. In such cases, reconnect from the beginning.
- When shooting continuously using [Remote Shoot Function], the update interval of the live view display on the computer may become longer.
- To ensure a secure wireless LAN connection, we strongly recommend using an access point with WPA3 or WPA2 security settings. Connecting to an access point without security settings may result in hacking, access from malicious third parties, or attacks on vulnerabilities. Unless there is a specific reason, we do not recommend using an access point without security settings.

Related Topic

- Introduction to desktop application (Imaging Edge Desktop/Catalyst)
- Remote Shoot Setting

TP1002150259

5-069-971-11(6) Copyright 2026 Sony Corporation

Remote Shoot Setting

Configures settings for images saved when performing remote shooting using a smartphone or computer.

1. **MENU → (Network) → [Cnct./Remote Sht.] → [Remote Shoot Setting] → desired setting item.**

Menu item details

Still Img. Save Dest.:
Sets the save destination. ([Destination Only]/[Dest.+Camera]/[Camera Only])

Save Image Size:
Selects the file size for images to be transferred to the smartphone or the computer when [Still Img. Save Dest.] is set to [Dest.+Camera]. The original-sized JPEG/HEIF file or a 2M-equivalent JPEG/HEIF file can be transferred. ([Original]/[2M])

RAW+J Save Image:
Selects the file type for images to be transferred to the smartphone or the computer when [Still Img. Save Dest.] is set to [Dest.+Camera] and [File Format] is set to [RAW & JPEG]. ([RAW & JPEG]/[JPEG Only]/[RAW Only])

RAW+H Save Image:
Selects the file type for images to be transferred to the smartphone or the computer when [Still Img. Save Dest.] is set to [Dest.+Camera] and [File Format] is set to [RAW & HEIF]. ([RAW & HEIF]/[HEIF Only]/[RAW Only])

Save JPEG Size/Save HEIF Size:
Use this item when sorting and saving JPEG/HEIF images with different image quality and image sizes to Slot 1 and Slot 2 by setting [Recording Media] to [Sort Recording]. Among the different sizes of image to be saved to Slot 1 and Slot 2, selects whether the larger or smaller size will be transferred to the smartphone or the computer when [Still Img. Save Dest.] is set to [Destination Only] or [Dest.+Camera]. ([Large Size]/[Small Size])

Note

- When an unrecordable memory card is inserted into the camera, you cannot record still images even if [Still Img. Save Dest.] is set to [Camera Only] or [Dest.+Camera].
- When [Camera Only] or [Dest.+Camera] is selected for [Still Img. Save Dest.] and no memory card is inserted into the camera, the shutter will not be released even if [Release w/o Card] is set to [Enable].
- While a still image is being played back on the camera, you cannot perform remote shooting using a smartphone or a computer.
- [RAW+J Save Image] and [RAW+H Save Image] can be set only when [File Format] is set to [RAW & JPEG] or [RAW & HEIF].

Related Topic

- Using a smartphone as a remote commander
- Rec. Media Settings (still image/movie): Recording Media (still image)

TP1002152731

5-069-971-11(6) Copyright 2026 Sony Corporation

USB Streaming (movie)

You can connect a computer, etc. to the camera and use the camera video and audio for livestreaming or web-conferencing services. Set the USB connection mode for the USB terminal to be used to [Sel. When Connect] or [USB Streaming] beforehand by selecting MENU → (Setup) → [USB] → [USB Cnct Mode (PORT1)] or [USB Cnct Mode (PORT2)].

1. **MENU → (Network) → [Streaming] → [USB Streaming] → Set [Output Res/Frame Rate] and [Movie Rec During Streaming].**

2. **Connect the camera to a computer or other device with a USB cable (commercially available).**

   [Streaming:Standby] will appear on the camera screen, and the camera will switch to the streaming standby state.

   - If the USB connection mode is set to [Sel. When Connect], select [Live Stream(USB Streaming)] on the selection screen for the USB connection mode.
   - Use a cable or adapter that matches the terminal on the device to be connected.

3. **Start streaming from your livestreaming/web-conferencing service.**

   [Streaming:Output] will appear on the camera screen.

   - To exit USB Streaming, disconnect the USB cable.

Menu item details

Output Res/Frame Rate:
Sets the resolution and the frame rate of the video. ([4K(2160p) 30p]/[4K(2160p) 25p]/[4K(2160p) 15p]/[4K(2160p)12.5p]/[HD(1080p) 60p]/[HD(1080p) 50p]/[HD(1080p) 30p]/[HD(1080p) 25p]/[HD(720p) 30p]/[HD(720p) 25p])

Movie Rec During Streaming:
Sets whether or not to enable recording of the video to the recording media during streaming. ([Enable]/[Disable])

Hint

- If you assign the shutter speed, ISO sensitivity, etc. to the dial or control wheel or register them to the function menu, you can adjust these values even during USB streaming.
- The format of the streaming data is as follows.
  - Video format: MJPEG* or YUV420
    * When the resolution is set to HD (720p), only MJPEG is available.
  - Audio format: PCM, 48 kHz, 16 bit, 2 ch
- During USB streaming, power is supplied to the camera from the computer. If you want to consume as little computer power as possible, change the [USB Power Supply] setting to one that does not supply power to the camera.
- When using an external microphone, you can minimize deviations between your voice and the movements of your mouth by connecting the microphone to the (microphone) terminal of the camera.

Note

- While USB streaming is in progress, the camera is always set to the movie recording mode regardless of the position of the Still/Movie/S&Q dial.
- You cannot do the following while USB Streaming is running.
  - Transition to the playback screen
  - Network functions (Remote Shooting, FTP transfer, remote operation from a smartphone, Bluetooth function, etc.)
- The following functions are disabled while USB Streaming is running.
  - Picture Profile
  - Power Save
  - Monitor Off
  - Monitor Low Bright
- When performing USB streaming with a resolution of 4K (2160p) or HD (1080p), use the USB PORT 1 terminal of the camera and a computer that is compatible with SuperSpeed USB 5 Gbps (USB 3.2) and a commercially available USB cable. Even if the resolution is set to 4K (2160p) or HD (1080p), the actual output resolution will be HD (720p) when using the USB PORT 2 terminal of the camera or connected via the USB 2.0 standard.
- If you change the settings for the following items during USB streaming, the streaming screen may pause temporarily. You may also need to resume streaming from an application depending on the livestreaming service.
  - [Output Res/Frame Rate] or [Movie Rec During Streaming] under [USB Streaming]
  - [File Format]
  - [Auto Framing Settings]
- Depending on the temperature environment, streaming output image-quality settings, video recording settings during streaming, Wi-Fi connection environment, and usage conditions before starting streaming, the internal temperature of the camera may rise, and the streaming time may be shortened.

Related Topic

- USB Cnct Mode (PORT1)/USB Cnct Mode (PORT2)

TP1002154693

5-069-971-11(6) Copyright 2026 Sony Corporation

Creators' Cloud

Creators' Cloud is a cloud solution that integrates production applications and services.
Creators' Cloud provides services and applications to creators of various productions.

The availability of Creators' Cloud and the supported services differ depending on the country/region.
For details on Creators' Cloud and the support status of each service, refer to the following website.
https://www.sony.net/cc/

TP1002156910

5-069-971-11(6) Copyright 2026 Sony Corporation

Interchangeable Lens Digital Camera
ILCE-7M5 α7V

Creating an account for Creators' Cloud and linking your camera to the account (Cloud Connection)

Create an account for the cloud service Creators' Cloud and link your camera to the account using Creators' App on your smartphone.

Note

- This function may only be available in certain countries and regions.
  For information about countries/regions where the service is supported, refer to the following website.
  https://creatorscloud.sony.net/catalog/servicearea.html

: Operations performed on the smartphone
: Operations performed on the camera

Preparing in advance

- Create an account for Creators' Cloud.
  Follow the instructions in the smartphone application Creators' App to create an account for Creators' Cloud.
- Pair the camera and smartphone.
  For detailed instructions, see "Pairing the camera with a smartphone (Smartphone Connection) ."
- Confirm that [Wi-Fi Connect] and [Bluetooth Function] are set to [On] on the camera.

Linking the camera to the account

1. Set the camera to shooting mode.
2. Launch Creators' App on your smartphone, and then open the [Cameras] screen.
3. Select [Cloud Function], and then follow the instructions on the screen to start setup.
4. When you register the access point, select the access point you use and enter the password, and then select [OK].
   The settings for the access point (the SSID and the password) are loaded to the camera.
   - If the access point to be used is already registered on the camera, select [Skip] and proceed to step 5.
5. Select [Start linking] on the smartphone screen.
   - The camera and the account will be linked. Then, follow the instructions on the screen to configure the image upload settings.
   - The camera may not be linked to the account if there is already account information on the camera or there is already camera information in Creators' Cloud. Remove the account and camera information before linking the camera to the account.

Note

- The camera may not be linked to the account properly if the procedure is canceled, the camera is powered off, or a network error, etc. occurs during the procedure. In this case, make sure that the account information on the camera or the camera information in Creators' Cloud is correct. If the information is not correct, remove the information and link the camera to the account again.

- Linking the camera to the account or connecting to Creators' Cloud may fail if the time setting on the camera is not correct. Make sure that the time setting is correct.

Connecting the camera to Creators' Cloud

1. MENU → (Network) → [Creators' Cloud] → [Cloud Connection] → [On].

To upload images on the camera to Creators' Cloud

Once the camera has been linked to the account for Creators' Cloud, and the function to upload to the cloud is turned on in Creators' App, you can connect to the server and upload images by simply setting [Cloud Connection] to [On].
Newly recorded images will be uploaded the next time you turn on the camera and connect to Creators' Cloud. Turn on the camera at the timing you want to upload.
For details, refer to the following website.
https://www.sony.net/ca/help/opr/

To cancel the linkage of the camera with Creators' Cloud

You need to cancel the linkage of the camera with the account both on the camera and in Creators' Cloud.
Operations on the camera:

1. MENU → (Network) → [Creators' Cloud] → [Cloud Information].
2. Select [Detail] in [Account Info.].
3. Select [Delete account info.].
4. Check the message displayed on the screen and select [OK].
   The information for the account will be removed from the camera.

Operations on the Creators' Cloud:

1. Open [Cameras] screen on Creators' App.
2. Select [Cloud Function] → [Disconnect the Link].
   The information for the camera will be removed from the account.

Hint

- You can also perform the following operations in Creators' Cloud Web (https://www.sony.net/capp/).
  - Creating an account for Creators' Cloud
  - Removing information of the camera from Creators' Cloud

Note

- To ensure a secure wireless LAN connection, we strongly recommend using an access point with WPA3 or WPA2 security settings. Connecting to an access point without security settings may result in hacking, access from malicious third parties, or attacks on vulnerabilities. Unless there is a specific reason, we do not recommend using an access point without security settings.

Related Topic

- Pairing the camera with a smartphone (Smartphone Connection)
- Displaying cloud connection information (Cloud Information)
- Notes on using the cloud service (Creators' Cloud)

5-069-971-11(6) Copyright 2026 Sony Corporation

Interchangeable Lens Digital Camera
ILCE-7M5 α7V

Displaying cloud connection information (Cloud Information)

Displays information about the camera and Creators' Cloud linkage account and the cloud connection.

Note

- This function may only be available in certain countries and regions.
  For information about countries/regions where the service is supported, refer to the following website.
  https://creatorscloud.sony.net/catalog/servicearea.html

1. **MENU → (Network) → [Creators' Cloud] → [Cloud Information].**

Displayed item details

Account Info.:
Displays detailed information about the linked account when [Detail] is selected. Selecting [Delete account info.] on the displayed screen removes the account information from the camera.
If you delete the Creators' Cloud account information from the camera, be sure to delete the camera information from Creators' Cloud as well.

Error Info.:
Displays error details when a network connection error occurs.

SSID:
The SSID of the connected access point is displayed.

TP1002156990

5-069-971-11(6) Copyright 2026 Sony Corporation

Notes on using the cloud service (Creators' Cloud)

Before lending or transferring the camera, make sure that the camera linkage information and upload settings are appropriate to prevent damage such as the content on the camera being uploaded to an unintended third party's Creators' Cloud. If the settings are not appropriate, be sure to perform the following operations.

- If you will transfer or lend the camera: initialize the camera or cancel the linkage with Creators' Cloud on the camera. Also, cancel the camera linkage in Creators' Cloud.
- If the camera is transferred to you or you borrow the camera: initialize the camera or cancel the linkage with Creators' Cloud on the camera.

Note that Creators' Cloud may only be available in certain countries and regions.

Notes on the network environment

The following network environments may interfere with the use of Creators' Cloud.

- Connecting to a network via a proxy server
- Configuring a firewall to your network
  If a firewall is configured, open the following outbound ports in the firewall settings.
  - TCP Source Port 32768-60999 Destination Port 443
  - TCP Source Port 32768-60999 Destination Port 80
  - UDP Source Port 32768-60999 Destination Port 53
  - UDP Source Port 32768-60999 Destination Port 443
  - UDP Source Port 32768-60999 Destination Port 32768-60999

- TCP destination port 80 is used unencrypted to obtain revocation information needed for destination server validation when connecting to the server. However, no personal information is sent.
- UDP destination port 53 is used unencrypted to obtain information needed to verify the server's address on the internet when connecting to the server. However, no personal information is sent.

Related Topic

- Creating an account for Creators' Cloud and linking your camera to the account (Cloud Connection)
- Displaying cloud connection information (Cloud Information)

TP1002158477

5-069-971-11(6) Copyright 2026 Sony Corporation

Audio accessories compatible with the Multi Interface Shoe

If you shoot movies with an audio accessory (sold separately) attached to the Multi Interface Shoe of the camera, analog or digital audio will be recorded via the Multi Interface Shoe.
If you use an audio accessory that supports the digital audio interface, the sound signals will be transmitted in a digital format. This will allow you a wider range of recordable audio quality, such as the following.

- High-quality audio recording with less deterioration
- 4-channel or 24-bit audio recording
- Audio recording with a sampling frequency of 96 kHz or in the 32-bit float format (when the camera's system software (firmware) version is Ver.2.00 or later)

The recordable audio quality differs depending on the audio accessory. For details, refer to the instruction manual for the audio accessory.

Hint

- You can change the audio settings for audio accessories that support the digital audio interface using [Shoe Audio Set.].

Note

- Movies recorded with audio sampled at a rate of 96 kHz, 32-bit float-format audio, or 24-bit audio may not be played back normally on devices or software incompatible with these audio formats, resulting in unexpectedly loud volumes or no sound.

Related Topic

- Shoe Audio Set.
- HDMI Output Settings (movie)
- 4ch Audio Monitoring (movie)
- Audio Out Timing
- Audio Recording

TP1002151234

5-069-971-11(6) Copyright 2026 Sony Corporation

Interchangeable Lens Digital Camera
ILCE-7M5 α7V

Vertical grip

You can attach a vertical grip (sold separately) to this product and record vertically oriented images. When attaching the vertical grip, remove the battery cover in advance.
For details, refer to the operating instructions for the vertical grip.

To remove the battery cover

Pull the battery cover release lever **(A)** in the direction of the arrow, and then remove the battery cover.

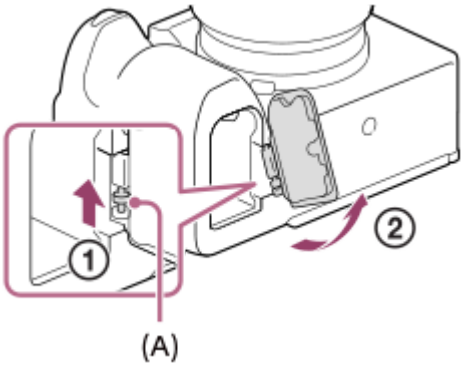

To attach the battery cover

Insert the shaft on one side of the battery cover into the attachment site, and then push in the battery cover by attaching the shaft on the opposite side.

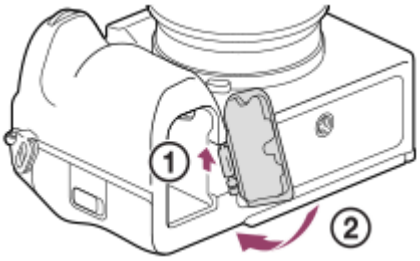

Hint

- You can attach the removed battery cover to the vertical grip so that you do not lose it.
- Two battery packs can be inserted into the vertical grip. In this case, the remaining capacity of each battery pack is displayed on the shooting screen and in the shooting setting list in the (Main) tab. On the playback screen and menu screen, the remaining capacity of the smaller of the two battery packs is displayed.
- The same functions are assigned to the C1 and C2 (Custom 1 and 2) buttons on the vertical grip as to the C1 and C2 (Custom 1 and 2) button on the camera.

Note

- If you attach the LA-EA4 Mount Adaptor (sold separately) and the vertical grip at the same time, the space between the Mount Adaptor and the vertical grip will become narrow, making the camera difficult to hold.

TP1002142833

5-069-971-11(6) Copyright 2026 Sony Corporation

Mount Adaptor

Using a Mount Adaptor (sold separately), you can attach an A-mount lens (sold separately) to this product.
For details, refer to the operating instructions supplied with the Mount Adaptor.

Note

- You may not be able to use the Mount Adaptor or auto-focus with certain lenses. Consult your Sony dealer or local authorized Sony service facility on compatible lenses.
- You cannot use the AF illuminator when using an A-mount lens.
- The sound of the lens and the product in operation may be recorded during movie recording.
  You can turn the sound off by selecting MENU → (Shooting) → [Audio Recording] → [Audio Recording] → [Off].
- It may take a long time or may be difficult for the product to focus, depending on the lens used or the subject.

Related Topic

- LA-EA3/LA-EA5 Mount Adaptor
- LA-EA4 Mount Adaptor

TP1002110708

5-069-971-11(6) Copyright 2026 Sony Corporation

LA-EA3/LA-EA5 Mount Adaptor

If you use the LA-EA3 Mount Adaptor (sold separately) or LA-EA5 Mount Adaptor (sold separately), the following functions are available.

Full frame shooting:
Available with full frame shooting-compatible lenses only
Autofocus:
LA-EA3: Available with SAM/SSM lens only
LA-EA5: Available with A-mount AF lenses* (For lenses other than SAM and SSM, autofocus is driven by the LA-EA5 AF coupler.)

* Autofocus is not available with some Minolta/Konica Minolta lenses and teleconverters.

AF system:
Phase Detection AF
AF/MF select:
Can be changed using the operating switch on the lens.
Focus Mode:
Single-shot AF/Automatic AF/Continuous AF/Direct manual focus (DMF)/Manual Focus

- When using a Mount Adaptor in the movie mode, adjust the aperture value and the focus manually.

Available focus area:
[Wide]/[Zone]/[Center Fix]/[Spot]/[Expand Spot]/[Custom]/[Tracking]
SteadyShot:
In-body

About autofocus during continuous shooting

Although the camera tracks the subject in focus regardless of the settings for continuous shooting, the function behaves as follows in some cases.

- The focus is locked to the setting in the first shot when the F-value is greater than F22.
- When shooting with [Continuous Shooting: Hi+] or [Continuous Shooting: Hi] and [Shutter Type] is set to [Electronic Shutter], the continuous shooting speed varies according to the focus mode setting as follows.
  - [Single-shot AF]/[DMF]/[Manual Focus]: The same speed as when an E-mount lens is attached (The focus is locked to the setting in the first shot.)
  - [Continuous AF]: Maximum of 8.6 images per second

Related Topic

- Mount Adaptor
- LA-EA4 Mount Adaptor

TP1002110632

5-069-971-11(6) Copyright 2026 Sony Corporation

LA-EA4 Mount Adaptor

If you use the LA-EA4 Mount Adaptor (sold separately), the following functions are available.

Full size shooting:
Available with full frame shooting-compatible lenses only
Autofocus:
Not available.

- Only the manual focusing mode is supported.

SteadyShot:
In-body

Note

- If you attach the LA-EA4 Mount Adaptor (sold separately) at the same time, the space between the Mount Adaptor and the vertical grip will become narrow, making the camera difficult to hold.

Related Topic

- Mount Adaptor
- LA-EA3/LA-EA5 Mount Adaptor

TP1002125571

5-069-971-11(6) Copyright 2026 Sony Corporation

Multi Battery Adaptor Kit

You can use the Multi Battery Adaptor Kit (sold separately) with this camera to shoot for long periods. When using the Multi Battery Adaptor Kit, remove the camera's battery cover.

For details, refer also to the operating instructions supplied with the Multi Battery Adaptor Kit.

To remove the battery cover

Pull the battery cover release lever **(A)** in the direction of the arrow, and then remove the battery cover.

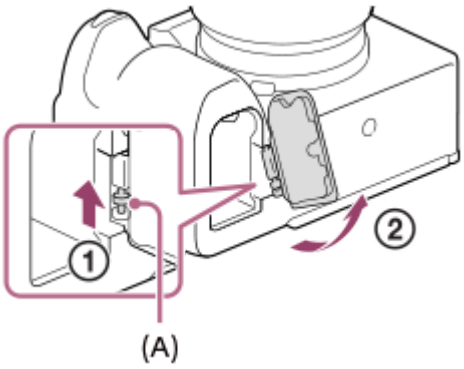

To attach the battery cover

Insert the shaft on one side of the battery cover into the attachment site, and then push in the battery cover by attaching the shaft on the opposite side.

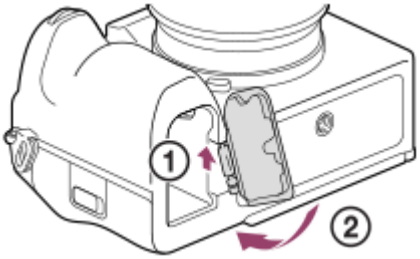

Note

- While the plug-in plate of the Multi Battery Adaptor Kit is inserted in the camera, do not slide the battery lock lever of the camera. The plug-in plate will be ejected from the camera if you do so.

TP1002150304

5-069-971-11(6) Copyright 2026 Sony Corporation

Battery life and number of recordable images

Number of recordable images when shooting still images

Screen mode	Approx. 750 images
Viewfinder mode	Approx. 630 images

Battery life for actual movie shooting

Screen mode	Approx. 135 min.
Viewfinder mode	Approx. 130 min.

Battery life for continuous movie shooting

Screen mode	Approx. 210 min.
Viewfinder mode	Approx. 210 min.

- The above estimates for battery life and number of recordable images apply when the battery pack has been fully charged. The battery life and number of images may decrease depending on the conditions of use.
- The battery life and number of recordable images are estimates based on shooting with the default settings under the following conditions:
  - Using the battery pack at an ambient temperature of 25°C (77°F).
  - Using a Sony CFexpress Type A memory card (sold separately)
  - Using a FE 28-70mm F3.5-5.6 OSS lens (sold separately)
- The numbers of recordable still images are based on the CIPA standard and shooting under the following conditions: (CIPA: Camera & Imaging Products Association)
  - One picture is taken every 30 seconds.
  - The power is turned on and off once every ten times.
- The number of minutes for movie shooting is based on the CIPA standard and shooting under the following conditions:
  - The image quality is set to XAVC S HD 60p 50M /50p 50M 4:2:0 8bit.
  - Actual shooting (movies): Battery life based on repeated shooting, shooting stand-by, turning on/off, etc.
  - Continuous shooting (movies): No operations other than starting and ending shooting are performed.

TP1002133954

5-069-971-11(6) Copyright 2026 Sony Corporation

Number of recordable images

When you insert a memory card into the camera and turn the camera on, the number of images that can be recorded (should you continue to shoot using the current settings) is displayed on the screen.

Note

- A maximum of 40 000 still images can be recorded to each memory card. If the number of recorded images reaches the upper limit, replace the memory card.
- When “0” (the number of recordable images) flashes in orange, the memory card is full or the number of recorded images exceeds the number that can be managed using the database file. Replace the memory card with another one, or delete images from the current memory card. When you transfer images on a memory card to a computer, etc., the number of recordable images may be displayed as “0”. In this case, you may be able to record images by executing [Recover Image DB].
- When “NO CARD” flashes in orange, it means no memory card has been inserted. Insert a memory card.

The number of images that can be recorded on a memory card

The table below shows the approximate number of images that can be recorded on a memory card formatted with this camera.
The numbers shown reflect the following conditions:

- Using a Sony memory card
- [Aspect Ratio] is set to [3:2], and [JPEG Image Size]/[HEIF Image Size] is set to [L: 33M]. *1

The values may vary depending on the shooting conditions and the type of memory card used.

(Unit: images)

JPEG Quality/HEIF Quality/ File Format	SD memory card		CFexpress Type A memory card	
	64GB	128GB	80GB	160GB
JPEG Light	9 900	19 000	11 000	23 000
JPEG Standard	6 800	13 000	7 900	15 000
JPEG Fine	4 800	9 600	5 600	11 000
JPEG Extra fine	2 300	4 700	2 700	5 500
HEIF Light	14 000	28 000	16 000	33 000
HEIF Standard	10 000	21 000	12 000	24 000
HEIF Fine	7 700	15 000	9 000	18 000
HEIF Extra fine	5 400	10 000	6 300	12 000
RAW & JPEG (RAW: Compressed)*2	1 300	2 700	1 600	3 200
RAW & HEIF (RAW: Compressed)*2	1 500	3 000	1 700	3 600
RAW (RAW: Compressed)	1 900	3 800	2 200	4 500

JPEG Quality/HEIF Quality/ File Format	SD memory card		CFexpress Type A memory card	
	64GB	128GB	80GB	160GB
RAW & JPEG (RAW: Compressed(HQ))*2	1 300	2 700	1 600	3 200
RAW & HEIF (RAW: Compressed(HQ))*2	1 500	3 000	1 700	3 600
RAW (RAW: Compressed(HQ))	1 900	3 800	2 200	4 500
RAW & JPEG (RAW: Lossless Comp)*2	1 000	2 000	1 100	2 300
RAW & HEIF (RAW: Lossless Comp)*2	1 100	2 200	1 200	2 500
RAW (RAW: Lossless Comp)	1 200	2 600	1 500	3 000

*1 When [Aspect Ratio] is set to other than [3:2], you can record more images than the numbers shown in the table above. (except when [RAW] is selected)

*2 JPEG image quality when [RAW & JPEG] is selected: [Fine]
HEIF image quality when [RAW & HEIF] is selected: [Fine]

Note

- Even if the number of recordable images is higher than 9 999 images, “9999” will appear.

Related Topic

- Memory cards that can be used

TP1002134040

5-069-971-11(6) Copyright 2026 Sony Corporation

Recordable movie times

The table below shows the approximate total recording times using a memory card formatted with this camera. The values may vary depending on the shooting conditions and the type of memory card used.

(h (hour), min (minute))

File Format	Rec Frame Rate	Record Setting	SD memory card		CFexpress Type A memory card	
			64 GB	128 GB	80 GB	160 GB
XAVC HS 4K	60p/50p	200M	35 min	1 h 10 min	40 min	1 h 20 min
		150M	45 min	1 h 35 min	50 min	1 h 40 min
		100M	1 h 5 min	2 h 10 min	1 h 15 min	2 h 30 min
		75M	1 h 25 min	2 h 50 min	1 h 35 min	3 h 10 min
		45M	2 h 10 min	4 h 30 min	2 h 20 min	4 h 50 min
XAVC S 4K	60p/50p	200M	35 min	1 h 10 min	40 min	1 h 20 min
		150M	45 min	1 h 35 min	50 min	1 h 40 min
XAVC S HD	60p/50p	50M	2 h	4 h 10 min	2 h 10 min	4 h 30 min
		25M	3 h 20 min	7 h	3 h 30 min	7 h 10 min
XAVC S-I 4K	60p	600M	10 min	25 min	10 min	25 min
	50p	500M	10 min	25 min	10 min	25 min
XAVC S-I HD	60p	222M	30 min	1 h 5 min	35 min	1 h 15 min
	50p	185M	30 min	1 h 5 min	35 min	1 h 15 min

The recording times when [Px Proxy Recording] is set to [Off].

- The times shown are recordable times using a Sony memory card.
- The duration of time available for movie recording varies depending on the file format/recording settings for movies, memory card, ambient temperature, Wi-Fi network environment, condition of the camera before you start recording, and condition of the charging of the battery.
  The maximum continuous recording time for a single movie shooting session is approximately 13 hours (a product specification limit).

Note

- The recordable time of movies varies because the camera is equipped with VBR (Variable Bit-Rate), which automatically adjusts image quality depending on the shooting scene. When you record a fast-moving subject, the image is clearer but the recordable time is shorter because more memory is required for recording. The recordable time also varies depending on the shooting conditions, the subject or the image quality/size settings.

Notes on continuous movie recording

- High-quality movie recording and high-speed continuous shooting require large amounts of power. Therefore, if you continue to shoot, the temperature inside the camera will rise, especially that of the image sensor. In such cases, the camera will turn off automatically because the surface of the camera is heated to a high temperature or the high temperature affects the quality of the images or the internal mechanism of the camera.
- The duration of time available for continuous movie recording when the camera records with the default settings after the power has been turned off for a while is as follows. The values indicate the continuous time from when the camera starts recording until the camera stops recording.

When [Auto Power OFF Temp.] is set to [Standard]

File Format	XAVC S HD	XAVC S 4K
Ambient temperature: 25°C (77°F)	Approx. 120 minutes	Approx. 90 minutes
Ambient temperature: 40°C (104°F)	Approx. 120 minutes	Approx. 30 minutes

When [Auto Power OFF Temp.] is set to [High]

File Format	XAVC S HD	XAVC S 4K
Ambient temperature: 25°C (77°F)	Approx. 120 minutes	Approx. 90 minutes
Ambient temperature: 40°C (104°F)	Approx. 120 minutes	Approx. 60 minutes

XAVC S HD: 60p 50M/50p 50M 4:2:0 8bit; when the camera is not connected via Wi-Fi; when using a CFexpress Type A memory card; when the monitor is open
XAVC S 4K: 60p 150M/50p 150M 4:2:0 8bit; when the camera is not connected via Wi-Fi; when using a CFexpress Type A memory card; when the monitor is open

- The duration of time available for movie recording varies with the temperature, file format/record setting for movies, Wi-Fi network environment, or condition of the camera before you start recording. If you frequently recompose or shoot images after the power is turned on, the temperature inside the camera will rise and the recording time available will be shorter.
- If the [!] (Overheating warning) icon appears, the temperature of the camera has risen.
- If the camera stops movie recording due to a high temperature, leave it for some time with the power turned off. Start recording after the temperature inside the camera drops fully.
- If you observe the following points, you will be able to record movies for longer periods of time.
  - Keep the camera out of direct sunlight.
  - Turn the camera off when it is not being used.

Related Topic

- Memory cards that can be used
- Battery life and number of recordable images

TP1002134072

5-069-971-11(6) Copyright 2026 Sony Corporation

Interchangeable Lens Digital Camera
ILCE-7M5 α7V

List of icons on the screen for shooting still images

The displayed contents and their positions in the illustrations are just guidelines, and may differ from the actual displays. Also, the displayed contents may vary depending on your camera's system software (firmware) version.
Descriptions are given below the indications of the icons.

Monitor mode

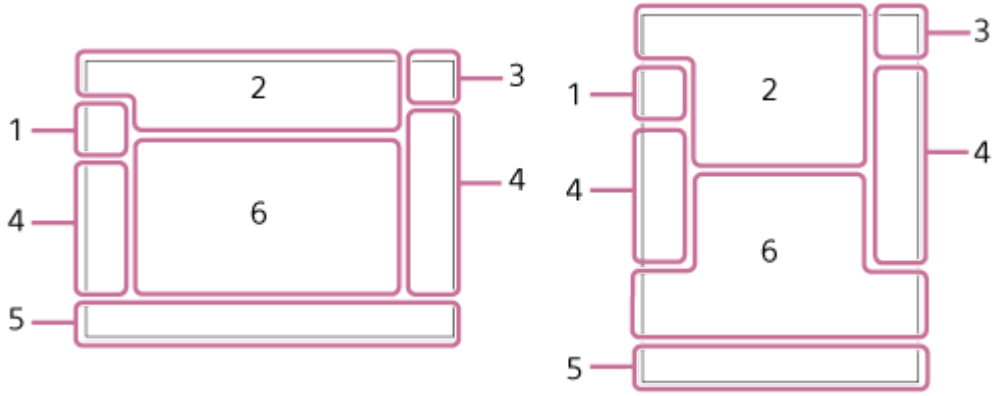

Viewfinder mode

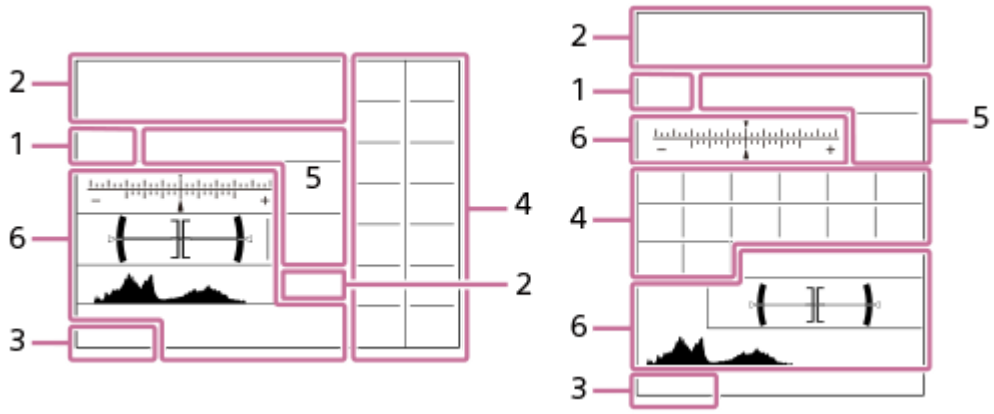

In addition to the icons described on this page, there are more icons for touch operations (touch function icons) that are displayed on the left or right side of the screen when you swipe the monitor. For details, refer to "Touch function icons."

1. **Shooting mode/Scene recognition**

   iP P P* A S M

   Shooting mode

   P M1

   Shooting mode (MR Recall Camera Setting)

   Scene Recognition icons

2. **Camera settings**

   1 2 1 2

   Memory card for recording / Not memory card for recording

   NO CARD

   No memory card inserted

   1 2 1 2 1 2 1 2

   Near the rewriting upper limit of the memory card / Rewriting upper limit of the memory card reached

100

Remaining number of recordable images

3

Writing data / Number of images left to write

33M / 29M / 28M / 22M / 14M / 13M / 12M / 9.4M / 8.2M / 7.3M / 6.9M / 5.5M

Image size of still images

RAW RAW HQ RAW

RAW recording (Compressed/Compressed(HQ)/Lossless Comp)

J-X.FINE J-FINE J-STD J-LIGHT H-X.FINE H-FINE H-STD H-LIGHT

JPEG Quality / HEIF Quality

4:2:2

Color sampling for HEIF

AF-S AF-A AF-C DMF MF

Focus Mode

Flash charging in progress

VIEW

Setting Effect OFF

VIEW

Exposure Effect (Exposure Setting Only)

Flicker Scan

Anti-flicker Tv Scan

ON

AF Illuminator

Flicker

Flickering detected

OFF ON ON

SteadyShot off/on, Camera shake warning

8mm 8mm

SteadyShot focal length / Camera shake warning

S C D

Smart Zoom/Clear Image Zoom/Digital Zoom

Remote Shooting (connected) / Remote Shooting (connection error)

Bright Monitoring

Silent mode

Remote control

Connected to the cloud/Communicating with the cloud/Cloud connection error

FTP FTP FTP FTP

Connected with FTP / FTP communication in progress / FTP connection error

Transferring to smartphone / Transfer error

Connected to Wi-Fi (via a Wi-Fi access point)

Disconnected from Wi-Fi (via a Wi-Fi access point)

Wi-Fi Wi-Fi

Connected to Wi-Fi/Disconnected from Wi-Fi (Wi-Fi Direct)

LAN LAN
Connected to LAN/Disconnected from LAN (When using a USB-LAN conversion adaptor)

©
Writing copyright information [On]

IPTC1 – IPTC20
Writing IPTC information (IPTC1 through IPTC20)

Focus Cancel

Touch Focus+AE cancel/TouchTracking+AE cancel/Touch AE cancel

Tracking Cancel

Bluetooth connection available / Bluetooth connection unavailable

Obtaining location information / Location information cannot be obtained

Airplane Mode

Overheating warning

FULL ERROR
Database file full / Database file error

AE lock/FEL lock/AWB lock

APS-C S35 Shooting

3. **Battery**

100%
Remaining battery

Remaining battery warning

USB power supply

4. **Shooting settings**

HI+ Hi MID Lo 10 C3 2s BRK CONT 2 BRK CONT BRK SINGLE 2 BRK SINGLE BRK Focus 2 BRK Focus BRK WB HI BRK DRO Lo 2 BRK WB HI 2 BRK DRO LO
Drive Mode

Continuous shooting speed boost setting

AUTO SLOW REAR WL SLOW WL SLOW HSS WL REAR WL
Flash Mode / Wireless Flash / Red Eye Reduction

±0.0
Flash Comp.

AF-S AF-A AF-C DMF MF
Focus Mode

M C1
Focus Area

STD L
Metering Mode

AWB AWB AWB -1 0 +1 +2 7500K A5 G5
White Balance (Auto, Preset, Underwater Auto, Custom, Color temperature, Color filter)

D-R OFF DRO AUTO
D-Range Optimizer

ST PT NT VV VV2 FL FL2 FL3 IN SH BW SE
Creative Look

Subject Recog in AF/ Recognition Target

MECH ELEC
Shutter Type

PP1 – PP11 PP OFF
Picture Profile

Rec. Media Settings

FPS HI FPS STD
Finder Frame Rate

5. **Focus indicator/exposure settings**

Focus indicator

1/250

Shutter speed

F3.5

Aperture value

M.M.
Exposure compensation/Metered Manual

±0.0

Flash Comp.

ISO400 ISO AUTO

ISO sensitivity

AWB L
AE lock/FEL lock/AWB lock

APS-C S35 Shooting

6. **Guides/other**

[Pre-Capture] standby / [Pre-Capture] in progress / [Pre-Capture] recording during continuous shooting / [Pre-Capture] unavailable / [Pre-Capture] unavailable due to the rise of the camera temperature

OFF ON ON
SteadyShot off/on, Camera shake warning

8mm 8mm
SteadyShot focal length / Camera shake warning

Tracking Cancel

Guide display for tracking

Focus Cancel

Guide display for canceling focusing

Tracking+AE Cancel

Guide display for tracking+AE

Focus+AE Cancel

Guide display for focus+AE

Touch AE Cancel

Guide display for touch AE

Av Tv Ev ISO
Guide display for dials

-6 5 4 3 2 1 0 1 2 3 4+
Bracket indicator

Spot metering area

Histogram

Digital level gauge

Smart Zoom/Clear Image Zoom/Digital Zoom

AF Illuminator

NR Shooting

Shooting for HDR

Related Topic

- List of icons on the screen for shooting movies
- List of icons on the playback screen

TP1002154753

5-069-971-11(6) Copyright 2026 Sony Corporation

Interchangeable Lens Digital Camera
ILCE-7M5 α7V

List of icons on the screen for shooting movies

The displayed contents and their positions in the illustrations are just guidelines, and may differ from the actual displays. Also, the displayed contents may vary depending on your camera's system software (firmware) version.
Descriptions are given below the indications of the icons.

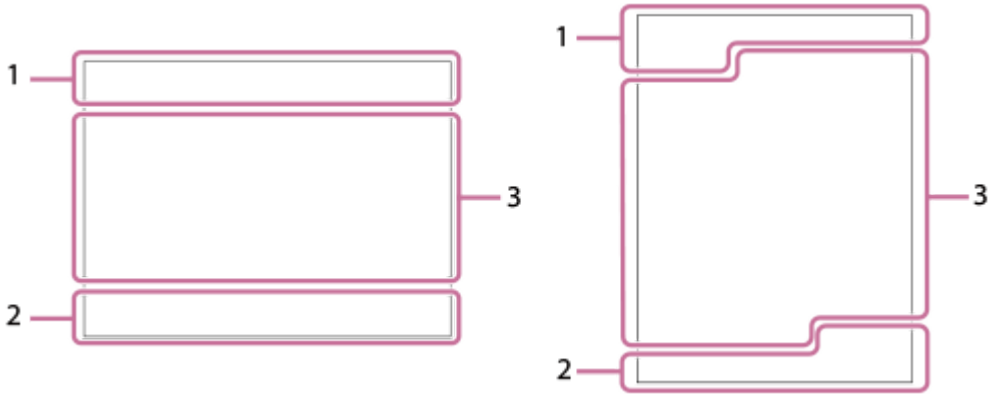

In addition to the icons described on this page, there are more icons for touch operations (touch function icons) that are displayed on the left or right side of the screen when you swipe the monitor. For details, refer to "Touch function icons."

1. **Basic camera settings**

1
2
Audio level

OFF
Audio recording off

AF-C MF
Focus Mode

- Displayed at position 3 during vertical display

S-log3 s709 709(800%) User1 LUT OFF
LUT

- Displayed at position 3 during vertical display

STBY REC
Movie recording standby/Movie recording in progress

4K HD
File format of movies

120p 100p 60p 50p 30p 25p 24p
Frame rate of movies

1 2 1 2
Memory card for recording / Not memory card for recording

NO CARD
No memory card inserted

1 2 1 2 1 2 1 2
Nearing the rewriting upper limit of the memory card / Rewriting upper limit of the memory card reached

1h 30m
Recordable time of movies

3

Writing data / Number of images left to write

100%

Remaining battery

Remaining battery warning

USB power supply

2. **Exposure and other settings**

1/250 A 1/250

Shutter speed

F3.5 A F3.5

Aperture value

M.M.

Exposure compensation/Metered Manual

ISO400 A ISO 400

ISO sensitivity

AWB AWB AWB −1 0 +1 +2 AWB **7500K A5 G5**

White Balance (Auto, Preset, Underwater Auto, Custom, Color temperature, Color filter)

AWB L

AE lock/AWB lock

APS-C S35 Shooting

3. **Other settings**

P A S M F S&Q S&Q P S&Q A S&Q S S&Q M S&Q F

P A S M F

Shooting mode

MR1 M S&Q M2 S MR1 A

Shooting mode (MR Recall Camera Setting)

S&Q S&Q S&Q S&Q S&Q S&Q S&Q S&Q S&Q

Scene Recognition icons

REC STBY

REC Control

EXT 4K EXT 4K

4K external output

1:00:12

Actual movie recording time (hours: minutes: seconds)

00:00:00.00

Time code (hours: minutes: seconds. frames)

00 00 00 00

User Bit

Spot Focus

Performing [Spot Focus]

x4 Slow x4 Quick

Slowness/quickness scale during slow-motion/quick-motion shooting

10s

Movie self-timer

C D

Clear Image Zoom/Digital Zoom

Assist S-Log3 Assist HLG 709 Assist HLG 2020

Gamma Disp. Assist Typ.

Starting/stopping network streaming output

High / Standard / Low / HD (1080p) 60p 9.0M

Image quality setting for network streaming output

Streaming : Standby / Output / Connecting / Connect. Err. / Not Connect

Network streaming status

4K(2160p) 30p / 4K(2160p) 25p /4K(2160p) 15p / 4K(2160p) 12.5p / HD(1080p) 60p / HD(1080p) 50p / HD(1080p) 30p / HD(1080p) 25p / HD(720p) 30p / HD(720p) 25p

USB streaming output format

Streaming : Standby / Streaming : Output

USB streaming status

● **Tracking Cancel**

Guide display for tracking

● **Focus Cancel**

Guide display for canceling focusing

● **Tracking+AE Cancel**

Guide display for tracking+AE

● **Focus+AE Cancel**

Guide display for focus+AE

● **Touch AE Cancel**

Guide display for touch AE

● **Lock Composition/** ● **Cancel Lock Composition**

Guide display for locking the composition with [Framing Stabilizer]

48kHz/16bit 2ch 48kHz/32bit float 4ch 96kHz/24bit 2ch 96kHz/32bit float 4ch

Audio format

32f

32bit float WAV Rec.

Av Tv Ev ISO

Guide display for dials

Flicker Scan

Anti-flicker Tv Scan

Focus Cancel

AE AE

Touch Focus+AE cancel/TouchTracking+AE cancel/Touch AE cancel

Tracking Cancel

Lock composition/Cancel lock composition

Remote Shooting (connected) / Remote Shooting (connection error)

Connected to the cloud/Communicating with the cloud/Cloud connection error

FTP FTP FTP FTP

Connected with FTP / FTP communication in progress / FTP connection error

Transferring to smartphone / Transfer error

Airplane Mode

Connected to Wi-Fi (via a Wi-Fi access point)

Disconnected from Wi-Fi (via a Wi-Fi access point)

Connected to Wi-Fi/Disconnected from Wi-Fi (Wi-Fi Direct)

Connected to LAN/Disconnected from LAN (When using a USB-LAN conversion adaptor)

Bluetooth connection available / Bluetooth connection unavailable

Remote control

Obtaining location information / Location information cannot be obtained

Metering Mode

D-Range Optimizer

Histogram

Digital level gauge

Overheating warning

Database file full / Database file error

Hint

- Area 3 icons may not be displayed while the touch function icons are displayed. To see hidden icons, swipe the touch function icons left or right to hide the touch function icons.

Related Topic

- List of icons on the screen for shooting still images
- List of icons on the playback screen

TP1002154754

5-069-971-11(6) Copyright 2026 Sony Corporation

Interchangeable Lens Digital Camera
ILCE-7M5 α7V

List of icons on the playback screen

The displayed contents and their positions in the illustrations are just guidelines, and may differ from the actual displays. Also, the displayed contents may vary depending on your camera's system software (firmware) version.
Descriptions are given below the indications of the icons.

Single-image playback

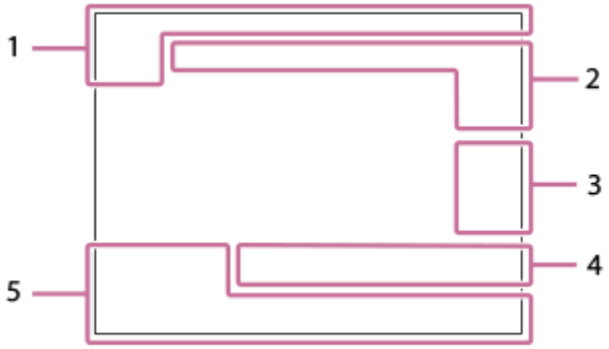

Histogram display

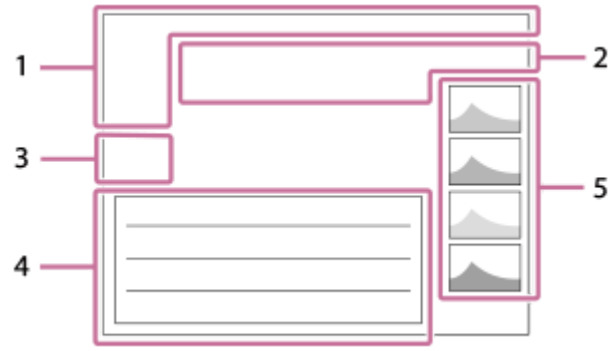

1. **Basic information**

   1 2
   Playback media

   IPTC
   IPTC Information

   Rating

   Protect

   3/7
   File number/Number of images filtered using [Playback Filter Condition]

   100%
   Remaining battery

   Display as Group

   Cropped image

   Px
   Proxy movie included

Pre-Capture

NR Shooting

4/4 Lv1
Shooting for HDR

Shot Mark included

32f
32bit float WAV Rec.

FTP transfer status

Smartphone transfer status (when using [Select on Cam & Send])

2. **Camera settings**

Connected to the cloud/Communicating with the cloud/Cloud connection error

FTP
Connected with FTP / FTP communication in progress / FTP connection error

Transferring to smartphone / Transfer error

Connected to Wi-Fi (via a Wi-Fi access point)

Disconnected from Wi-Fi (via a Wi-Fi access point)

Wi-Fi
Connected to Wi-Fi/Disconnected from Wi-Fi (Wi-Fi Direct)

LAN
Connected to LAN/Disconnected from LAN (When using a USB-LAN conversion adaptor)

Bluetooth connection available / Bluetooth connection unavailable

Airplane Mode

Overheating warning

FULL ERROR
Database file full / Database file error

3. **Touch operation icons**

Shooting mode switching

S1
Add/Delete Shot Mark1

Jump to the positions of Shot Marks

4. **Shooting settings**

3:2 4:3 16:9 1:1
Aspect ratio

33M / 29M / 28M / 22M / 14M / 13M / 12M / 9.4M / 8.2M / 7.3M / 6.9M / 5.5M
Image size of still images

RAW
RAW recording

J-X.FINE J-FINE J-STD J-LIGHT H-X.FINE H-FINE H-STD H-LIGHT
JPEG Quality/HEIF Quality

4:2:2

Color sampling for HEIF

XAVC HS 4K XAVC S 4K XAVC S HD XAVC S-I 4K XAVC S-I HD

File format of movies

120p 100p 60p 50p 30p 25p 24p

Frame rate of movies

600 500 300 280 250 240 222 200 185 150 140 111 100 93 89 75 60 50 45 30 25 16

Record setting of movies

48kHz/32bit float 4ch 96kHz/24bit 2ch 96kHz/32bit float 4ch

Audio format

1/250

Shutter speed

F3.5

Aperture value

ISO400

ISO sensitivity

P A S M

Exposure mode

Exposure compensation

Metering Mode

35mm

Lens focal length

ST PT NT VV VV2 FL FL2 FL3 IN SH BW SE

Creative Look

AWB AWB AWB −1 0 +1 +2 **7500K A5 G5**

White Balance (Auto, Preset, Underwater Auto, Color temperature, Color filter)

D-R OFF DRO AUTO

D-Range Optimizer

HLG

HDR recording (Hybrid Log-Gamma)

Copyright information exists for image

5. **Image information**

Latitude/longitude information

2026-1-1 10:37:00PM

Date of recording

100MSDCF DSC00001

Folder name / file name

C0003

Movie file number

Histogram (Luminance/R/G/B)

Related Topic

- List of icons on the screen for shooting still images
- List of icons on the screen for shooting movies

5-069-971-11(6) Copyright 2026 Sony Corporation

Interchangeable Lens Digital Camera
ILCE-7M5 α7V

List of default setting values (Shooting)

The default setting values at the time of purchase are shown in the following table.
The content of the menu displayed on the screen differs depending on the position of the Still/Movie/S&Q dial. For details, refer to "Finding functions from MENU."

To reset settings to the default values

Select MENU → (Setup) → [Reset/Save Settings] → [Setting Reset] → [Camera Settings Reset] or [Initialize] → [Enter].
Initialize: All the settings of the camera will be reset to the default values.
Camera Settings Reset: Items that can be reset are limited. See the following table.

/ (Shooting) tab

MENU item	Default setting value	Resettable using [Camera Settings Reset]
JPEG/HEIF Switch	JPEG	✓
Image Quality Settings (File Format)	JPEG/HEIF	✓
Image Quality Settings (RAW File Type)	Compressed(HQ)	✓
Image Quality Settings (JPEG Quality/HEIF Quality)	Fine	✓
Image Quality Settings (JPEG Image Size/HEIF Image Size) (when [Aspect Ratio] is set to [3:2])	L: 33M	✓
Image Quality Settings (JPEG Image Size/HEIF Image Size) (when [Aspect Ratio] is set to [4:3])	L: 29M	✓
Image Quality Settings (JPEG Image Size/HEIF Image Size) (when [Aspect Ratio] is set to [16:9])	L: 28M	✓
Image Quality Settings (JPEG Image Size/HEIF Image Size) (when [Aspect Ratio] is set to [1:1])	L: 22M	✓
Aspect Ratio	3:2	✓
File Format	XAVC S HD	✓
Movie Settings (Rec Frame Rate) (when [File Format] is set to [XAVC HS 4K])	24p	✓
Movie Settings (Rec Frame Rate) (when [File Format] is set to [XAVC S 4K])	30p/25p	✓
Movie Settings (Rec Frame Rate) (when [File Format] is set to [XAVC S HD])	60p/50p	✓
Movie Settings (Rec Frame Rate) (when [File Format] is set to [XAVC S-I 4K])	30p/25p	✓

MENU item	Default setting value	Resettable using [Camera Settings Reset]
▶■ Movie Settings (Rec Frame Rate) (when [▶■ File Format] is set to [XAVC S-I HD])	60p/50p	✓
▶■ Movie Settings (Record Setting) (when [▶■ File Format] is set to [XAVC HS 4K] and [Rec Frame Rate] is set to [60p]/[50p])	45M 4:2:0 10bit	✓
▶■ Movie Settings (Record Setting) (when [▶■ File Format] is set to [XAVC HS 4K] and [Rec Frame Rate] is set to [24p])	50M 4:2:0 10bit	✓
▶■ Movie Settings (Record Setting) (when [▶■ File Format] is set to [XAVC HS 4K] and [Rec Frame Rate] is set to [120p]/[100p])	200M 4:2:0 10bit	✓
▶■ Movie Settings (Record Setting) (when [▶■ File Format] is set to [XAVC S 4K] and [Rec Frame Rate] is set to [60p]/[50p])	150M 4:2:0 8bit	✓
▶■ Movie Settings (Record Setting) (when [▶■ File Format] is set to [XAVC S 4K] and [Rec Frame Rate] is set to [30p]/[25p])	60M 4:2:0 8bit	✓
▶■ Movie Settings (Record Setting) (when [▶■ File Format] is set to [XAVC S 4K] and [Rec Frame Rate] is set to [24p])	60M 4:2:0 8bit	✓
▶■ Movie Settings (Record Setting) (when [▶■ File Format] is set to [XAVC S 4K] and [Rec Frame Rate] is set to [120p]/[100p])	200M 4:2:0 8bit	✓
▶■ Movie Settings (Record Setting) (when [▶■ File Format] is set to [XAVC S HD] and [Rec Frame Rate] is set to [60p]/[50p])	50M 4:2:0 8bit	✓
▶■ Movie Settings (Record Setting) (when [▶■ File Format] is set to [XAVC S HD] and [Rec Frame Rate] is set to [30p]/[25p])	50M 4:2:0 8bit	✓
▶■ Movie Settings (Record Setting) (when [▶■ File Format] is set to [XAVC S HD] and [Rec Frame Rate] is set to [24p])	50M 4:2:0 8bit	✓
▶■ Movie Settings (Record Setting) (when [▶■ File Format] is set to [XAVC S HD] and [Rec Frame Rate] is set to [120p]/[100p])	60M 4:2:0 8bit	✓
▶■ Movie Settings (Record Setting) (when [▶■ File Format] is set to [XAVC S-I 4K] and [Rec Frame Rate] is set to [60p]/[50p])	600M 4:2:2 10bit/500M 4:2:2 10bit	✓
▶■ Movie Settings (Record Setting) (when [▶■ File Format] is set to [XAVC S-I 4K] and [Rec Frame Rate] is set to [30p]/[25p])	300M 4:2:2 10bit/250M 4:2:2 10bit	✓
▶■ Movie Settings (Record Setting) (when [▶■ File Format] is set to [XAVC S-I 4K] and [Rec Frame Rate] is set to [24p])	240M 4:2:2 10bit	✓
▶■ Movie Settings (Record Setting) (when [▶■ File Format] is set to [XAVC S-I HD] and [Rec Frame Rate] is set to [60p]/[50p])	222M 4:2:2 10bit/185M 4:2:2 10bit	✓
▶■ Movie Settings (Record Setting) (when [▶■ File Format] is set to [XAVC S-I HD] and [Rec Frame Rate] is set to [30p]/[25p])	111M 4:2:2 10bit/93M 4:2:2 10bit	✓
▶■ Movie Settings (Record Setting) (when [▶■ File Format] is set to [XAVC S-I HD] and [Rec Frame Rate] is set to [24p])	89M 4:2:2 10bit	✓

MENU item	Default setting value	Resettable using [Camera Settings Reset]
S&Q S&Q Settings (S&Q Frame Rate Settings) (when [File Format] is set to [XAVC HS 4K])	24p 120fps / 24p 100fps	✓
S&Q S&Q Settings (S&Q Frame Rate Settings) (when [File Format] is set to [XAVC S 4K])	30p 120fps / 25p 100fps	✓
S&Q S&Q Settings (S&Q Frame Rate Settings) (when [File Format] is set to [XAVC S HD])	60p 120fps / 50p 100fps	✓
S&Q S&Q Settings (S&Q Frame Rate Settings) (when [File Format] is set to [XAVC S-I 4K])	30p 120fps / 25p 100fps	✓
S&Q S&Q Settings (S&Q Frame Rate Settings) (when [File Format] is set to [XAVC S-I HD])	60p 120fps / 50p 100fps	✓
S&Q S&Q Settings (S&Q Record Setting) (when [File Format] is set to [XAVC HS 4K] and [S&Q Rec Frame Rate] is set to [60p]/[50p])	45M 4:2:0 10bit	✓
S&Q S&Q Settings (S&Q Record Setting) (when [File Format] is set to [XAVC HS 4K] and [S&Q Rec Frame Rate] is set to [24p])	50M 4:2:0 10bit	✓
S&Q S&Q Settings (S&Q Record Setting) (when [File Format] is set to [XAVC HS 4K] and [S&Q Rec Frame Rate] is set to [120p]/[100p])	200M 4:2:0 10bit	✓
S&Q S&Q Settings (S&Q Record Setting) (when [File Format] is set to [XAVC S 4K] and [S&Q Rec Frame Rate] is set to [60p]/[50p])	150M 4:2:0 8bit	✓
S&Q S&Q Settings (S&Q Record Setting) (when [File Format] is set to [XAVC S 4K] and [S&Q Rec Frame Rate] is set to [30p]/[25p])	60M 4:2:0 8bit	✓
S&Q S&Q Settings (S&Q Record Setting) (when [File Format] is set to [XAVC S 4K] and [S&Q Rec Frame Rate] is set to [24p])	60M 4:2:0 8bit	✓
S&Q S&Q Settings (S&Q Record Setting) (when [File Format] is set to [XAVC S 4K] and [S&Q Rec Frame Rate] is set to [120p]/[100p])	200M 4:2:0 8bit	✓
S&Q S&Q Settings (S&Q Record Setting) (when [File Format] is set to [XAVC S HD] and [S&Q Rec Frame Rate] is set to [60p]/[50p])	50M 4:2:0 8bit	✓
S&Q S&Q Settings (S&Q Record Setting) (when [File Format] is set to [XAVC S HD] and [S&Q Rec Frame Rate] is set to [30p]/[25p])	50M 4:2:0 8bit	✓
S&Q S&Q Settings (S&Q Record Setting) (when [File Format] is set to [XAVC S HD] and [S&Q Rec Frame Rate] is set to [24p])	50M 4:2:0 8bit	✓

MENU item	Default setting value	Resettable using [Camera Settings Reset]
S&Q S&Q Settings (S&Q Record Setting) (when [File Format] is set to [XAVC S HD] and [S&Q Rec Frame Rate] is set to [120p]/[100p])	60M 4:2:0 8bit	✓
S&Q S&Q Settings (S&Q Record Setting) (when [File Format] is set to [XAVC S-I 4K] and [S&Q Rec Frame Rate] is set to [60p])	600M 4:2:2 10bit	✓
S&Q S&Q Settings (S&Q Record Setting) (when [File Format] is set to [XAVC S-I 4K] and [S&Q Rec Frame Rate] is set to [50p])	500M 4:2:2 10bit	✓
S&Q S&Q Settings (S&Q Record Setting) (when [File Format] is set to [XAVC S-I 4K] and [S&Q Rec Frame Rate] is set to [30p])	300M 4:2:2 10bit	✓
S&Q S&Q Settings (S&Q Record Setting) (when [File Format] is set to [XAVC S-I 4K] and [S&Q Rec Frame Rate] is set to [25p])	250M 4:2:2 10bit	✓
S&Q S&Q Settings (S&Q Record Setting) (when [File Format] is set to [XAVC S-I 4K] and [S&Q Rec Frame Rate] is set to [24p])	240M 4:2:2 10bit	✓
S&Q S&Q Settings (S&Q Record Setting) (when [File Format] is set to [XAVC S-I HD] and [S&Q Rec Frame Rate] is set to [60p])	222M 4:2:2 10bit	✓
S&Q S&Q Settings (S&Q Record Setting) (when [File Format] is set to [XAVC S-I HD] and [S&Q Rec Frame Rate] is set to [50p])	185M 4:2:2 10bit	✓
S&Q S&Q Settings (S&Q Record Setting) (when [File Format] is set to [XAVC S-I HD] and [S&Q Rec Frame Rate] is set to [30p])	111M 4:2:2 10bit	✓
S&Q S&Q Settings (S&Q Record Setting) (when [File Format] is set to [XAVC S-I HD] and [S&Q Rec Frame Rate] is set to [25p])	93M 4:2:2 10bit	✓
S&Q S&Q Settings (S&Q Record Setting) (when [File Format] is set to [XAVC S-I HD] and [S&Q Rec Frame Rate] is set to [24p])	89M 4:2:2 10bit	✓
Time-lapse Settings ([Rec Frame Rate] under [Frame Rate Settings]) (when [File Format] is set to [XAVC HS 4K])	24p	✓
Time-lapse Settings ([Rec Frame Rate] under [Frame Rate Settings]) (when [File Format] is set to [XAVC S 4K])	30p/25p	✓
Time-lapse Settings ([Rec Frame Rate] under [Frame Rate Settings]) (when [File Format] is set to [XAVC S HD])	60p/50p	✓
Time-lapse Settings ([Rec Frame Rate] under [Frame Rate Settings]) (when [File Format] is set to [XAVC S-I 4K])	30p/25p	✓

MENU item	Default setting value	Resettable using [Camera Settings Reset]
Time-lapse Settings ([Rec Frame Rate] under [Frame Rate Settings]) (when [File Format] is set to [XAVC S-I HD])	60p/50p	✓
Time-lapse Settings ([Interval Time] under [Frame Rate Settings])	1 s	✓
Time-lapse Settings(Record Setting) (when [File Format] is set to [XAVC HS 4K] and [Rec Frame Rate] is set to [60p]/[50p])	45M 4:2:0 10bit	✓
Time-lapse Settings(Record Setting) (when [File Format] is set to [XAVC HS 4K] and [Rec Frame Rate] is set to [24p])	50M 4:2:0 10bit	✓
Time-lapse Settings(Record Setting) (when [File Format] is set to [XAVC S 4K] and [Rec Frame Rate] is set to [60p]/[50p])	150M 4:2:0 8bit	✓
Time-lapse Settings(Record Setting) (when [File Format] is set to [XAVC S 4K] and [Rec Frame Rate] is set to [30p]/[25p])	60M 4:2:0 8bit	✓
Time-lapse Settings(Record Setting) (when [File Format] is set to [XAVC S 4K] and [Rec Frame Rate] is set to [24p])	60M 4:2:0 8bit	✓
Time-lapse Settings(Record Setting) (when [File Format] is set to [XAVC S HD] and [Rec Frame Rate] is set to [60p]/[50p])	50M 4:2:0 8bit	✓
Time-lapse Settings(Record Setting) (when [File Format] is set to [XAVC S HD] and [Rec Frame Rate] is set to [30p]/[25p])	50M 4:2:0 8bit	✓
Time-lapse Settings(Record Setting) (when [File Format] is set to [XAVC S HD] and [Rec Frame Rate] is set to [24p])	50M 4:2:0 8bit	✓
Time-lapse Settings(Record Setting) (when [File Format] is set to [XAVC S-I 4K] and [Rec Frame Rate] is set to [60p])	600M 4:2:2 10bit	✓
Time-lapse Settings(Record Setting) (when [File Format] is set to [XAVC S-I 4K] and [Rec Frame Rate] is set to [50p])	500M 4:2:2 10bit	✓
Time-lapse Settings(Record Setting) (when [File Format] is set to [XAVC S-I 4K] and [Rec Frame Rate] is set to [30p])	300M 4:2:2 10bit	✓
Time-lapse Settings(Record Setting) (when [File Format] is set to [XAVC S-I 4K] and [Rec Frame Rate] is set to [25p])	250M 4:2:2 10bit	✓
Time-lapse Settings(Record Setting) (when [File Format] is set to [XAVC S-I 4K] and [Rec Frame Rate] is set to [24p])	240M 4:2:2 10bit	✓

MENU item	Default setting value	Resettable using [Camera Settings Reset]
Time-lapse Settings(Record Setting) (when [File Format] is set to [XAVC S-I HD] and [Rec Frame Rate] is set to [60p])	222M 4:2:2 10bit	✓
Time-lapse Settings(Record Setting) (when [File Format] is set to [XAVC S-I HD] and [Rec Frame Rate] is set to [50p])	185M 4:2:2 10bit	✓
Time-lapse Settings(Record Setting) (when [File Format] is set to [XAVC S-I HD] and [Rec Frame Rate] is set to [30p])	111M 4:2:2 10bit	✓
Time-lapse Settings(Record Setting) (when [File Format] is set to [XAVC S-I HD] and [Rec Frame Rate] is set to [25p])	93M 4:2:2 10bit	✓
Time-lapse Settings(Record Setting) (when [File Format] is set to [XAVC S-I HD] and [Rec Frame Rate] is set to [24p])	89M 4:2:2 10bit	✓
Time-lapse Settings(Video Light Setting)	Off	✓
4K angle of view Priority	Off	✓
Log Shooting Setting (Log Shooting)	Off	✓
Log Shooting Setting (Color Gamut)	S-Gamut3.Cine/S-Log3	✓
Log Shooting Setting (Embed LUT File)	On	✓
Px Proxy Settings (Px Proxy Recording)	Off	✓
Px Proxy Settings (Px Proxy File Format)	XAVC S HD	✓
Px Proxy Settings (Px Proxy Rec. Settings) (when [Px Proxy File Format] is set to [XAVC HS HD])	9M 4:2:0 10bit	✓
Px Proxy Settings (Px Proxy Rec. Settings) (when [Px Proxy File Format] is set to [XAVC S HD])	6M 4:2:0 8bit	✓
APS-C S35 Shooting	Auto	—
Long Exposure NR	On	✓
High ISO NR	Normal	✓
HLG Still Image	Off	✓
Color Space	sRGB	✓
Lens Compensation (Shading Comp.)	Auto	—
Lens Compensation (Chromatic Aberration Comp.)	Auto	—
Lens Compensation (Distortion Comp.)	Off	—
Lens Compensation (Breathing Comp.)	Off	✓
Format	—	—

MENU item	Default setting value	Resettable using [Camera Settings Reset]
Rec. Media Settings (Recording Media)	Slot 1	—
Rec. Media Settings (Recording Media)	Slot 1	—
Rec. Media Settings (Auto Switch Media Card)	Off	—
Recover Image DB* * This item is not reset even if you select [Camera Settings Reset] or [Initialize].	—	—
File/Folder Settings (File Number)	Series	—
File/Folder Settings (Forced File Number Reset)	—	—
File/Folder Settings (Set File Name)	DSC	—
File/Folder Settings (Folder Name)	Standard Form	—
Select REC Folder	—	—
Create New Folder	—	—
IPTC Information (Write IPTC Info)	Off	—
IPTC Information (Import/Delete)	—	—
IPTC Information (Delete All)	—	—
Copyright Info (Write Copyright Info)	Off	—
Copyright Info (Set Photographer)	—	—
Copyright Info (Set Copyright)	—	—
Copyright Info (Disp. Copyright Info)	—	—
Write Serial Number	Off	—
File Settings (File Number)	Series	—
File Settings (Series Counter Reset)	—	—
File Settings (File Name Format)	Standard	—
File Settings (Title Name Settings)	C	—
Exposure Ctrl Type	P/A/S/M Mode	—
MR Recall Camera Setting	—	—
MR Camera Set. Memory	—	—
Shoot Mode	—	✓
S&Q Shoot Mode	S&Q Motion	✓
MR Memory/Recall Media	Slot 1	✓
Reg. Custom Shoot Set	—	—

MENU item	Default setting value	Resettable using [Camera Settings Reset]
Drive Mode	Single Shooting	✓
Drive Mode Limit	—	✓
Cont. Shooting Speed (Hi+(E-Shutter))	30 images/s	✓
Cont. Shooting Speed (Hi(E-Shutter))	20 images/s	✓
Cont. Shooting Speed (Mid(E-Shutter))	15 images/s	✓
Cont. Shooting Speed (Lo(E-Shutter))	5 images/s	✓
Cnt Sht Spd Bst Settings	30 images/s	✓
Pre-Capture Settings (Pre-Capture)	Off	✓
Pre-Capture Settings (Pre-Capture Rec Time)	0.5 seconds	✓
Pre-Capture Settings (Pre-Captr. Start Trigger)	Both Valid	✓
Bracket Settings (Selftimer during Bracket)	Off	✓
Bracket Settings (Bracket order)	0→-→+	✓
Bracket Settings (Focus Bracket Order)	0→+	✓
Bracket Settings (Exposure Smoothing)	Off	✓
Bracket Settings (Shooting Interval)	Shortest	✓
Bracket Settings (Focus Brckt Saving Dest)	Current Folder	✓
Interval Shoot Func. (Interval Shooting)	Off	✓
Interval Shoot Func. (Shooting Start Time)	1 Sec	✓
Interval Shoot Func. (Shooting Interval)	3 Sec	✓
Interval Shoot Func. (Number of Shots)	30	✓
Interval Shoot Func. (AE Tracking Sensitivity)	Mid	✓
Interval Shoot Func. (Shutter Type in Interval)	Electronic Shutter	✓
Interval Shoot Func. (Shoot Interval Priority)	Off	✓
NR Shooting Settings (NR Shooting)	Off	✓
NR Shooting Settings (RAW File Type)	Compressed(HQ)	✓
NR Shooting Settings (Number of Shots)	4 shots	✓
Shooting for HDR Set (Shooting for HDR)	Off	✓
Shooting for HDR Set (RAW File Type)	Compressed(HQ)	✓
Silent Mode Settings (Silent Mode)	Off	✓
Silent Mode Settings ([Aperture Drive in AF] under [Target Function Settings])	Standard	✓

MENU item	Default setting value	Resettable using [Camera Settings Reset]
Silent Mode Settings ([Shutter When Pwr OFF] under [Target Function Settings])	Off	✓
Silent Mode Settings ([Auto Pixel Mapping] under [Target Function Settings])	Off	✓
Shutter Type	Mechanical Shutter	✓
e-Front Curtain Shut.	On	—
Shoot. Start Display	Off	—
Release w/o Lens	Enable	—
Release w/o Card	Enable	—
Anti-flicker Set. (Anti-flicker Shoot.)	Off	✓
Anti-flicker Set. (Var. Shutter)	Off	✓
Anti-flicker Set. (Var. Shutter Set.)	—	—
Audio Recording	On	✓
Audio Rec Level	26	✓
Audio Out Timing	Live	✓
Audio NR Settings (Wind NR: Int Mic)	Auto	✓
Audio NR Settings (Wind NR: Ext Mic)	Off	✓
Audio NR Settings (Noise Cut: Int Mic)	On	✓
Audio NR Settings (Noise Cut: Ext Mic)	Off	✓
Shoe Audio Set. (Shoe Audio Format)	48kHz/16bit	✓
Shoe Audio Set. (Shoe Audio Ch No.)	2ch	✓
Shoe Audio Set. (32bit float WAV Rec.)	Off	✓
Time Code Preset	00:00:00.00	—
User Bit Preset	00 00 00 00	—
Time Code Format	DF	—
Time Code Run	Rec Run	—
Time Code Make	Preset	—
User Bit Time Rec	Off	—
SteadyShot	On	✓
SteadyShot	Standard	✓
SteadyShot Adjust.	Auto	✓

MENU item	Default setting value	Resettable using [Camera Settings Reset]
Focal Length (when [SteadyShot Adjust.] is set to [Manual])	8mm	✓
Framing Stabilizer	Off	✓
Zoom	—	—
Zoom Range	Optical zoom only	—
Custom Key Z. Speed (Fixed Speed STBY)	3	✓
Custom Key Z. Speed (Fixed Speed REC)	3	✓
Remote Zoom Speed (Speed Type)	Variable	✓
Remote Zoom Speed (Fixed Speed STBY)	3	✓
Remote Zoom Speed (Fixed Speed REC)	3	✓
Grid Line Display	Off	—
Grid Line Type	Rule of 3rds Grid	—
Live View Display Set. (Live View Display)	Setting Effect ON	—
Live View Display Set. (Exposure Effect)	Exposure Set. & flash	—
Live View Display Set. (Frame Rate Low Limit)	Off	✓
Emphasized REC Display	Off	✓
Aspect Marker	Off	✓
Aspect Marker Type	1:1	✓
Aspect Marker Level	12	✓
Marker Display	Off	—
Center Marker	Off	—
Aspect Marker	Off	—
Safety Zone	Off	—
Guideframe	Off	—
Self-timer	Off	✓
Auto Framing Settings (Auto Framing)	Off	✓
Auto Framing Settings (Framing Oper. Mode)	Auto Start	✓
Auto Framing Settings (Crop Level)	Medium crop level	✓
Auto Framing Settings (Framing Tracking Speed)	3	✓
Auto Framing Settings (Movie Rec/Streaming)	Crop	✓
Auto Framing Settings (HDMI Output)	Crop	✓

MENU item	Default setting value	Resettable using [Camera Settings Reset]
AutoCreateStillImage	Off	✓
S after still img crt	Maintain	✓
Selection/Memo Shot (Top Image)	Off	✓
Selection/Memo Shot (Pre-Capture Shutter Rel)	Off	✓

TP1002161108

5-069-971-11(6) Copyright 2026 Sony Corporation

Interchangeable Lens Digital Camera
ILCE-7M5 α7V

List of default setting values (Exposure/Color)

The default setting values at the time of purchase are shown in the following table.
The content of the menu displayed on the screen differs depending on the position of the Still/Movie/S&Q dial. For details, refer to "Finding functions from MENU."

To reset settings to the default values

Select MENU → (Setup) → [Reset/Save Settings] → [Setting Reset] → [Camera Settings Reset] or [Initialize] → [Enter].
Initialize: All the settings of the camera will be reset to the default values.
Camera Settings Reset: Items that can be reset are limited. See the following table.

(Exposure/Color) tab

MENU item	Default setting value	Resettable using [Camera Settings Reset]
BULB Timer Settings (BULB Timer)	Off	✓
BULB Timer Settings (Exposure Time)	60 seconds	✓
Auto Slow Shutter	On	✓
ISO	ISO AUTO	✓
ISO Range Limit	—	—
ISO AUTO Min. SS	Standard	✓
Auto/Manual Swt. Set. (Av Auto/Manual Switch)	Manual	✓
Auto/Manual Swt. Set. (Tv Auto/Manual Switch)	Manual	✓
Auto/Manual Swt. Set. (ISO Auto/Manual Set)	Manual	✓
Exposure Comp.	±0.0	✓
Exposure step	0.3EV	—
Exposure Std. Adjust (Multi)	±0	—
Exposure Std. Adjust (Center)	±0	—
Exposure Std. Adjust (Spot)	±0	—
Exposure Std. Adjust (Entire Screen Average)	±0	—
Exposure Std. Adjust (Highlight)	±0	—
Metering Mode	Multi	✓
Face Priority in Multi Metering	On	✓
Spot Metering Point	Center	✓

MENU item	Default setting value	Resettable using [Camera Settings Reset]
AEL w/ Shutter	Auto	—
Flash Mode	Autoflash	✓
Flash Comp.	±0.0	✓
Exp.comp.set	Ambient only	—
Wireless Flash	Off	✓
Red Eye Reduction	Off	✓
External Flash Set. (Ext. Flash Firing Set.)	—	—
External Flash Set. (Ext. Flash Cust. Set.)	—	—
Reg. Flash Shooting Set	—	✓
White Balance	Auto	✓
Priority Set in AWB	Standard	✓
Shutter AWB Lock	Off	—
Shockless WB	1 (Fast)	✓
WB Capt. Frame Size	Large	—
D-Range Optimizer	D-Range Optimizer: Auto	✓
Creative Look	ST(Standard)	✓
Picture Profile	Off	✓
Select LUT	s709	✓
Manage User LUTs	—	—
Soft Skin Effect	Off	✓
Zebra Display	Off	—
Zebra Level	70	—

TP1002161109

5-069-971-11(6) Copyright 2026 Sony Corporation

Interchangeable Lens Digital Camera
ILCE-7M5 α7V

List of default setting values (Focus)

The default setting values at the time of purchase are shown in the following table.
The content of the menu displayed on the screen differs depending on the position of the Still/Movie/S&Q dial. For details, refer to "Finding functions from MENU."

To reset settings to the default values

Select MENU → (Setup) → [Reset/Save Settings] → [Setting Reset] → [Camera Settings Reset] or [Initialize] → [Enter].
Initialize: All the settings of the camera will be reset to the default values.
Camera Settings Reset: Items that can be reset are limited. See the following table.

AF/MF (Focus) tab

MENU item	Default setting value	Resettable using [Camera Settings Reset]
Focus Mode	Automatic AF	✓
Priority Set in AF-S	Balanced Emphasis	—
Priority Set in AF-C	Balanced Emphasis	—
AF Lvl for Crossing	3(Standard)	✓
AF Trk for Spd Chng	Standard	✓
AF Illuminator	Auto	✓
Aperture Drive in AF	Standard	—
Preset Focus/Zoom	—	—
AF w/ Shutter	On	—
Full Time DMF	Off	✓
AF Transition Speed	5	✓
AF Subj. Shift Sensitivity	5(Responsive)	✓
AF Assist	Off	✓
Focus Area	Wide	✓
Focus Area Limit	—	✓
Switch V/H AF Area	Off	✓
Focus Area Color	White	—
AF Area Registration	Off	—
Del. Regist. AF Area	—	—
AF Area Auto Clear	Off	—

MENU item	Default setting value	Resettable using [Camera Settings Reset]
Area Disp. dur Tracking	Off	—
AF-C Area Display	On	—
Phase Detect. Area	Off	—
Circ. of Focus Point	Does Not Circulate	—
AF Frame Move Amt	Standard	✓
Subject Recog in AF	On	✓
Recognition Target	Human	✓
Recog Trgt Select Set	—	✓
Right/Left Eye Select	Auto	✓
Sbj Recog Frm Disp.	Off	✓
Sbj Recog Frm Disp.	On	✓
Face Memory	—	—
Regist. Face Priority	On	✓
Focus Map	Off	✓
Auto Magnifier in MF	On	—
Focus Magnifier	—	—
Focus Magnif. Time	No Limit	—
Initial Focus Mag.	x1.0	—
AF in Focus Mag.	On	—
Initial Focus Mag.	x1.0	—
Peaking Display	Off	—
Peaking Level	Mid	—
Peaking Color	White	—

TP1002161110

5-069-971-11(6) Copyright 2026 Sony Corporation

Interchangeable Lens Digital Camera
ILCE-7M5 α7V

List of default setting values (Playback)

The default setting values at the time of purchase are shown in the following table.

To reset settings to the default values

Select MENU → (Setup) → [Reset/Save Settings] → [Setting Reset] → [Camera Settings Reset] or [Initialize] → [Enter].
Initialize: All the settings of the camera will be reset to the default values.
Camera Settings Reset: Items that can be reset are limited. See the following table.

(Playback) tab

MENU item	Default setting value	Resettable using [Camera Settings Reset]
Play Set of Multi. Media	Slot 1	—
Disp Set of Multi Media	Follow PB Settings	—
Playback Filter Condition	—	—
Image Order	Date Order	—
Enlarge Image	—	—
Enlarge Initial Mag.	Standard. Mag.	—
Enlarge Initial Position	Focused Position	—
Protect	—	—
Rating	—	—
Rating Set(Custom Key)	—	—
Clip Flag	—	—
Delete	—	—
Delete pressing twice	Off	—
Delete confirm.	"Cancel" first	—
Delete Slot1/2	Select When Exec	—
Initial Pos. When Exec	Cancel	—
Crop	—	—
Rotate	—	—
Copy	—	—
Photo Capture	—	—

MENU item	Default setting value	Resettable using [Camera Settings Reset]
Create Still Image	—	—
after still img crt	Maintain	—
JPEG/HEIF Switch	JPEG	—
Cont. Play for Interval	—	—
Play Speed for Interval	5	—
Slide Show (Repeat)	Off	—
Slide Show (Interval)	3 Sec	—
Image Index	9 Images	—
Display as Group	Off	—
Display Rotation	Auto	—
Focus Frame Display	Off	—
Aspect Marker Disp. (Aspect Marker Disp.)	On	—
Aspect Marker Disp. (Aspect Marker Level)	12	—
Disp Specified Time Img.	—	—
Image Jump Setting (Front dial)	Top Image	—
Image Jump Setting (Rear Dial L)	One by one	—
Image Jump Setting (Rear Dial R)	One by one	—

TP1002161111

5-069-971-11(6) Copyright 2026 Sony Corporation

Interchangeable Lens Digital Camera
ILCE-7M5 α7V

List of default setting values (Network)

The default setting values at the time of purchase are shown in the following table.

To reset settings to the default values

Select MENU → (Setup) → [Reset/Save Settings] → [Setting Reset] → [Camera Settings Reset] or [Initialize] → [Enter].
Initialize: All the settings of the camera will be reset to the default values.
Camera Settings Reset: Items that can be reset are limited. See the following table.

(Network) tab

MENU item	Default setting value	Resettable using [Camera Settings Reset]
Smartphone Connection	—	—
Remote Shoot Function (Remote Shooting)	Off	—
Remote Shoot Function (Wi-Fi Direct Info.)	—	—
Select on Cam & Send (Send)	—	—
Select on Cam & Send (Size of Sending Image)	2M	—
Select on Cam & Send (RAW+J/H Send Target)	JPEG & HEIF	—
Select on Cam & Send (Px Sending Target)	Proxy Only	—
Select on Cam & Send (Movie with Shot Mark)	Cut to 15 seconds	—
Reset Transfer Status	—	—
Cnct. while Power OFF	Off	—
Remote Shoot Setting (Still Img. Save Dest.)	Dest.+Camera	—
Remote Shoot Setting (Save Image Size)	2M	—
Remote Shoot Setting (RAW+J Save Image)	JPEG Only	—
Remote Shoot Setting (RAW+H Save Image)	HEIF Only	—
Remote Shoot Setting (Save JPEG Size)	Large Size	—
Remote Shoot Setting (Save HEIF Size)	Large Size	—
FTP Transfer Func. (FTP Function)	Off	—
FTP Transfer Func. (Server Setting)	Server 1	—

MENU item	Default setting value	Resettable using [Camera Settings Reset]
FTP Transfer Func. (Save/Load FTP Settings)	—	—
FTP Transfer Func. (FTP Transfer)	—	—
FTP Transfer Func. (Display FTP Error Info.)	—	—
FTP Transfer Func. (Display FTP Result)	—	—
FTP Transfer Func. (Auto FTP Transfer)	Off	—
FTP Transfer Func. (Auto FTP Target)	Still Image (All)	—
FTP Transfer Func. (RAW+J/H Transfer Target)	JPEG & HEIF	—
FTP Transfer Func. (Transfer JPEG Size)	Large Size	—
FTP Transfer Func. (Transfer HEIF Size)	Large Size	—
FTP Transfer Func. (Px Transfer Target)	Proxy Only	—
FTP Transfer Func. (Protect Image in FTP transfer)	Off	—
FTP Transfer Func. (FTP Power Save)	Off	—
Network Streaming (Streaming)	Off	—
Network Streaming (Stream Connect Error Display)	—	—
Network Streaming (Output Img. Quality Set)	Standard / HD (1080p) / 60p / 50p / —	—
Network Streaming (Output Information Display)	—	—
Network Streaming (Movie Rec During Streaming)	Disable	—
Network Streaming (Emphasized Output Display)	On	—
Network Streaming (Root Certificate Error)	Does Not Connect	—
USB Streaming (Output Res/Frame Rate)	HD(1080p) 30p/HD(1080p) 25p	—
USB Streaming (Movie Rec During Streaming)	Disable	—
Cloud Connection*	Off	—
Cloud Information*	—	—
Wi-Fi Connect	Off	—
WPS Push	—	—

MENU item	Default setting value	Resettable using [Camera Settings Reset]
Access Point Set.	—	—
Wi-Fi Frequency Band	2.4GHz	—
Display Wi-Fi Info.	—	—
SSID/PW Reset	—	—
Bluetooth Function	Off	—
Pairing	—	—
Manage Paired Device	—	—
Bluetooth Rmt Ctrl	On	—
Disp Device Address	—	—
LAN IP Address Setting	Auto	—
Display Wired LAN Info.	—	—
USB LAN Connection	—	—
USB LAN Disconnection	—	—
Tethering Connection	—	—
Tethering Disconnection	—	—
USB LAN/Teth Cnct	PORT1	—
Airplane Mode	Off	—
Edit Device Name	—	—
Import Root Certificate	—	—
Access Authen. Settings (User)	—	—
Access Authen. Settings (Password)	—	—
Access Authen. Settings (Generate Password)	—	—
Access Authen. Info	—	—
Wi-Fi Direct Settings	Type1 (Standard)	—
Reset Network Set.	—	—

*Only available in certain countries and regions

TP1002161112

5-069-971-11(6) Copyright 2026 Sony Corporation

Interchangeable Lens Digital Camera
ILCE-7M5 α7V

List of default setting values (Setup)

The default setting values at the time of purchase are shown in the following table.

To reset settings to the default values

Select MENU → (Setup) → [Reset/Save Settings] → [Setting Reset] → [Camera Settings Reset] or [Initialize] → [Enter].
Initialize: All the settings of the camera will be reset to the default values.
Camera Settings Reset: Items that can be reset are limited. See the following table.

(Setup) tab

MENU item	Default setting value	Resettable using [Camera Settings Reset]
Language	—	—
Area/Date/Time Setting (Area Setting)	—	—
Area/Date/Time Setting (Daylight Savings)	Off	—
Area/Date/Time Setting (Date/Time)	—	—
Area/Date/Time Setting (Date Format)	—	—
NTSC/PAL Selector	—	—
Setting Reset	—	—
Save/Load Settings	—	—
Custom Key/Dial Set. (Front dial)	Av/Tv (Av in M mode)	—
Custom Key/Dial Set. (Rear Dial L)	Av/Tv (Tv in M mode)	—
Custom Key/Dial Set. (Rear Dial R)	Exposure Comp.	—
Custom Key/Dial Set. (Control Wheel)	Not set	—
Custom Key/Dial Set. (Custom Button 1)	White Balance	—
Custom Key/Dial Set. (Custom Button 2)	Focus Area	—
Custom Key/Dial Set. (Custom Button 3)	Focus Mode	—
Custom Key/Dial Set. (Custom Button 4)	Touch Operation Select	—
Custom Key/Dial Set. (Multi-Slc Center Btn)	Focus Standard	—
Custom Key/Dial Set. (Center Button)	Not set	—
Custom Key/Dial Set. (Left Button)	Drive Mode	—
Custom Key/Dial Set. (Right Button)	ISO	—

MENU item	Default setting value	Resettable using [Camera Settings Reset]
Custom Key/Dial Set. (Down Button)	Not set	—
Custom Key/Dial Set. (AEL Button)	AEL hold	—
Custom Key/Dial Set. (AF-ON Button)	AF On	—
Custom Key/Dial Set. (MOVIE Button)	Movie Shooting	—
Custom Key/Dial Set. (Focus Hold Button)	Focus Hold	—
Custom Key/Dial Set. (Front dial)	Follow Custom ( )	—
Custom Key/Dial Set. (Rear Dial L)	Follow Custom ( )	—
Custom Key/Dial Set. (Rear Dial R)	Follow Custom ( )	—
Custom Key/Dial Set. (Control Wheel)	Follow Custom ( )	—
Custom Key/Dial Set. (Custom Button 1)	Follow Custom ( )	—
Custom Key/Dial Set. (Custom Button 2)	Follow Custom ( )	—
Custom Key/Dial Set. (Custom Button 3)	Follow Custom ( )	—
Custom Key/Dial Set. (Custom Button 4)	Follow Custom ( )	—
Custom Key/Dial Set. (Multi-Slc Center Btn)	Follow Custom ( )	—
Custom Key/Dial Set. (Center Button)	Follow Custom ( )	—
Custom Key/Dial Set. (Left Button)	Self-timer	—
Custom Key/Dial Set. (Right Button)	Follow Custom ( )	—
Custom Key/Dial Set. (Down Button)	Follow Custom ( )	—
Custom Key/Dial Set. (AEL Button)	Follow Custom ( )	—
Custom Key/Dial Set. (AF-ON Button)	Follow Custom ( )	—
Custom Key/Dial Set. (MOVIE Button)	Movie Shooting	—
Custom Key/Dial Set. (Focus Hold Button)	Follow Custom ( )	—
Custom Key Setting (Custom Button 1)	Follow Custom (/)	—
Custom Key Setting (Custom Button 2)	Follow Custom (/)	—
Custom Key Setting (Custom Button 3)	Protect	—
Custom Key Setting (Custom Button 4)	Delete	—
Custom Key Setting (AEL Button)	Image Index	—
Custom Key Setting (AF-ON Button)	Magnification	—
Custom Key Setting (MOVIE Button)	Follow Custom (/)	—

MENU item	Default setting value	Resettable using [Camera Settings Reset]
▶ Custom Key Setting (Fn Button)	▶ Function Menu	—
Fn Menu Settings	—	—
▶ Fn Menu Settings	—	—
DISP (Screen Display)	—	—
DISP (Screen Display)	—	—
Different Set for Still/Mv	—	—
REC w/ Shutter	Off	—
S with Shutter Button	Do not add	—
Zoom Ring Rotate	Left(W)/Right(T)	—
Custom Key/Dial Set.	—	—
Custom Key/Dial Set.	—	—
My Dial Settings	—	—
Av/Tv Rotate	Normal	—
Function Ring(Lens)	Power Focus	—
Lock Operation Parts	Off	—
Touch Operation	On	—
Touch Panel/Pad	Touch Panel Only	—
Touch Panel Settings ([Shooting Screen] under [Shooting Screen])	On	—
Touch Panel Settings ([Footer Icon Touch] under [Shooting Screen])	On	—
Touch Panel Settings ([Swipe Right] under [Shooting Screen])	Icon Display: L&R	—
Touch Panel Settings ([Swipe Left] under [Shooting Screen])	Icon Display: L&R	—
Touch Panel Settings ([Swipe Up] under [Shooting Screen])	Open the Fn Menu	—
Touch Panel Settings ([Touch Func. in Shooting] under [Shooting Screen])	Touch Tracking	—
Touch Panel Settings ([Double Tap During AF] under [Shooting Screen])	Off	—
Touch Panel Settings ([Icon When Monitor Flipped] under [Shooting Screen])	Flip	—
Touch Panel Settings (Playback Screen)	On	—

MENU item	Default setting value	Resettable using [Camera Settings Reset]
Touch Panel Settings (Menu Screen)	On	—
Touch Pad Settings (Operation in Vertical Orientation)	On	—
Touch Pad Settings (Touch Position Mode)	Absolute Position	—
Touch Pad Settings (Operation Area)	Right 1/2	—
Touch Sensitivity	Standard	—
Screen Reader (Screen Reader)	Off	—
Screen Reader (Speed)	Standard	—
Screen Reader (Volume)	7	—
Screen Reader (MENU Long Press to Switch)	On	—
Screen Reader (Screen Reader Language)	—	—
Enlarge Screen (Enlarge Menu Scrn)	Off	—
Enlarge Screen (Magnification)	—	—
Mode Dial Control Set (Shooting Mode Dial)	Set with Dial	—
Select Finder/Monitor	Auto: 1	—
Monitor Brightness	Manual	—
Viewfinder Bright.	Auto	—
Finder Color Temp.	±0	—
Display Quality	Standard	—
Finder Frame Rate	Standard	—
Monitor Flip Direction	Auto	—
Vertical Display	On	—
TC/UB Disp. Setting	Counter	—
Gamma Display Assist	Off	—
Gamma Disp. Assist Typ.	Auto	—
Display LUT	On	—
Shoot. Timing Display	On: Type1	—
Remain Shoot Display	Not Displayed	—
Auto Review	Off	—
Shoot Mode Sel. Screen	Display	—
Monitor Low Bright	10 Sec	—
Monitor Off	Does not turn OFF	—

MENU item	Default setting value	Resettable using [Camera Settings Reset]
Power Save	1 Min	—
Power Save by Monitor	Both Linked	—
Auto Power OFF Temp.	Standard	—
Playback/Monitor. Vol.	7	—
4ch Audio Monitoring	CH1/CH2	—
Audio Signal(Shooting)	On:all	—
Audio Signal(Start/End)	Off	—
Audio Signal Volume	3	—
USB Cnct Mode (PORT1)	Sel. When Connect	—
USB Cnct Mode (PORT2)	Sel. When Connect	—
USB LUN Setting	Multi	—
USB Power Supply	Auto	—
HDMI Resolution	Auto	—
HDMI Output Settings (Rec. Media dur HDMI Output)	On	—
HDMI Output Settings (Output Resolution)	Auto	—
HDMI Output Settings (4K Output Set.(HDMI Only))	60p 10bit/50p 10bit	—
HDMI Output Settings (Time Code Output)	Off	—
HDMI Output Settings (REC Control)	Off	—
HDMI Output Settings (4ch Audio Output)	CH1/CH2	—
HDMI Info. Display	On	—
CTRL FOR HDMI	On	—
Video Light Mode	Power Link	—
Anti-dust Function (Sensor Cleaning)	—	—
Anti-dust Function (Shutter When Pwr OFF)	Off	—
Auto Pixel Mapping	On	—
Pixel Mapping	—	—
Version	—	—
Display Serial Number	—	—
Privacy Notice	—	—
Certification Logo	—	—

5-069-971-11(6) Copyright 2026 Sony Corporation

List of default setting values (My Menu)

The default setting values at the time of purchase are shown in the following table.

To reset settings to the default values

Select MENU → (Setup) → [Reset/Save Settings] → [Setting Reset] → [Camera Settings Reset] or [Initialize] → [Enter].
Initialize: All the settings of the camera will be reset to the default values.
Camera Settings Reset: Items that can be reset are limited. See the following table.

(My Menu) tab

MENU item	Default setting value	Resettable using [Camera Settings Reset]
Add Item	—	—
Sort Item	—	—
Delete Item	—	—
Delete Page	—	—
Delete All	—	—
Display From My Menu	Off	—

TP1002161113

5-069-971-11(6) Copyright 2026 Sony Corporation

Interchangeable Lens Digital Camera
ILCE-7M5 α7V

Specifications

System

Camera Type
Interchangeable Lens Digital Camera

Lens
Sony E-mount lens

Image sensor

Image format
35 mm full frame (35.9 mm × 23.9 mm), CMOS image sensor

Effective pixel number of camera
Still Images: Approx. 33 000 000 pixels
Movies: Approx. 27 600 000 pixels

Total pixel number of camera
Approx. 35 700 000 pixels

SteadyShot

System
In-camera sensor shift image stabilization system

Anti-Dust

System
Charge protection coating on optical filter and image sensor shift mechanism

Auto focus system

Detection system
Phase-detection system/Contrast detection system

Sensitivity Range
–4 EV to +20 EV (at ISO 100 equivalent, F2.0, when setting AF-S)

AF illuminator
Approx. 0.3 m to 3.0 m (When using an FE 28-70 mm F3.5-5.6 OSS)

Electronic Viewfinder

Type
1.3 cm (0.5 type) Electronic Viewfinder

Total number of dots
3 686 400 dots

Frame coverage

100%

Magnification

Approx. 0.78× with 50 mm lens at infinity, –1 m^{-1}

Eye Point

Approx. 23 mm from the eyepiece and approx. 18.5 mm from the eyepiece frame at –1 m^{-1}

Diopter Adjustment

$-4.0\ m^{-1}$ to $+3.0\ m^{-1}$

Monitor

LCD monitor

8.0 cm (3.2 type) TFT drive, touch panel

Total number of dots

2 095 104 dots

Exposure control

Metering method

1 200-zone evaluative metering

Metering Range

–3 EV to +20 EV (at ISO 100 equivalent with F2.0 lens)

ISO sensitivity (Recommended exposure index)

Still images: ISO 100 to ISO 51 200 (Extended ISO: Minimum ISO 50, maximum ISO 204 800), [ISO AUTO] (ISO 100 to ISO 12 800, Maximum/Minimum can be set.)

Movies: ISO 100 to ISO 51 200 equivalent (Extended ISO: Maximum equivalent to ISO 102 400)*, [ISO AUTO] (ISO 100 to ISO 12 800 equivalent, Maximum/Minimum can be set.)

* Values are those when [SteadyShot] is set to other than [Dynamic active]. When [SteadyShot] is set to [Dynamic active], the values are ISO 100 to ISO 25 600 equivalent.

Exposure compensation

±5.0 EV (switchable between 1/3 EV and 1/2 EV steps)

Shutter

Type

Electronically-controlled, vertical-traverse, focal-plane type

Speed range

Still images (when shooting with the electronic shutter): 1/16 000 second to 30 seconds

Still images (when shooting with the mechanical shutter): 1/8 000 second to 30 seconds, BULB

Movies: 1/8 000 second to 1 second (1/3 EV step)
60p-compatible devices: up to 1/60 second in AUTO mode (up to 1/30 second in Auto slow shutter mode)
50p-compatible devices: up to 1/50 second in AUTO mode (up to 1/25 second in Auto slow shutter mode)

Flash sync speed (when using a flash manufactured by Sony)

1/250 second (Full-frame)

1/320 second (APS-C size)

Continuous shooting

Continuous shooting speed

(Continuous Shooting: Hi+) : Maximum of approx. 30 images per second/ (Continuous Shooting: Hi): Maximum of approx. 20 images per second/ (Continuous Shooting: Mid): Maximum of approx. 15 images per second/ (Continuous Shooting: Lo): Maximum of approx. 5 images per second

- Based on our measurement conditions. The speed of continuous shooting can be slower, depending on the shooting conditions.
- You can change the speed of continuous shooting.

Recording format

File format

JPEG (compliant with DCF Ver. 2.0, Exif Ver. 2.32, and MPF Baseline), HEIF (MPEG-A MIAF compliant), RAW (Sony ARW 6.0 format compliant)

Movie (XAVC HS format)

XAVC Ver2.4: MP4 format compliant

Video: MPEG-H HEVC/H.265

Audio: LPCM 2ch (48 kHz 16 bit), LPCM 2ch (48 kHz 24 bit)[*1], LPCM 2ch (96 kHz 24 bit)[*2], LPCM 4ch (48 kHz 24 bit)[*1], LPCM 4ch (96 kHz 24 bit)[*2], PCM 2ch (48 kHz 32 bit float)[*2 *3], PCM 2ch (96 kHz 32 bit float)[*2 *3], PCM 4ch (48 kHz 32 bit float)[*2 *3], PCM 4ch (96 kHz 32 bit float)[*2 *3], MPEG-4 AAC-LC 2ch[*4]

Movie (XAVC S format)

XAVC Ver2.4: MP4 format compliant

Video: MPEG-4 AVC/H.264

Audio: LPCM 2ch (48 kHz 16 bit), LPCM 2ch (48 kHz 24 bit)[*1], LPCM 2ch (96 kHz 24 bit)[*2], LPCM 4ch (48 kHz 24 bit)[*1], LPCM 4ch (96 kHz 24 bit)[*2], PCM 2ch (48 kHz 32 bit float)[*2 *3], PCM 2ch (96 kHz 32 bit float)[*2 *3], PCM 4ch (48 kHz 32 bit float)[*2 *3], PCM 4ch (96 kHz 32 bit float)[*2 *3], MPEG-4 AAC-LC 2ch[*4]

*1 When using accessories that can support 4ch output and 24 bits with the Multi Interface Shoe

*2 When using an accessory that supports 4-channel output, 96 kHz sampling, and 32-bit float attached to the Multi Interface Shoe (when the camera's system software (firmware) is Ver.2.00 or later)

*3 The audio can be recorded in the WAV format (when the camera's system software (firmware) is Ver.2.00 or later).

*4 Proxy movies

Recording media

CFexpress Type A memory cards, SD cards

Slot

SLOT 1

Slot for CFexpress Type A memory cards, SD cards (UHS-I and UHS-II compatible)

SLOT 2

Slot for SD cards (UHS-I and UHS-II compatible)

Supports operations between two memory cards.

Input/output terminals

USB Type-C terminal (USB PORT 1)

SuperSpeed USB 10 Gbps (USB 3.2)

USB Power Delivery support

USB Type-C terminal (USB PORT 2)

Hi-Speed USB (USB 2.0)

USB Power Delivery support

HDMI

HDMI type A jack

(Microphone) terminal

Ø 3.5 mm Stereo mini jack

(Headphones) terminal
Ø 3.5 mm Stereo mini jack

Power, general

Rated input
7.2 V ⎓

Power consumption
Using an FE 28-70 mm F3.5-5.6 OSS
When using the viewfinder: Approx. 3.1 W (while shooting still images)/approx. 4.7 W (while shooting movies)
When using the monitor: Approx. 2.6 W (while shooting still images)/approx. 4.7 W (while shooting movies)

Operating temperature
0 °C to 40 °C (32 °F to 104 °F)

Storage temperature
–20 °C to 55 °C (–4 °F to 131 °F)

Dimensions (W/H/D) (Approx.)
130.3 × 96.4 × 82.4 mm
130.3 × 96.4 × 72.3 mm (from grip to monitor)
5 1/4 × 3 7/8 × 3 1/4 in.
5 1/4 × 3 7/8 × 2 7/8 in. (from grip to monitor)

Mass (Approx.)
695 g (1 lb 8.6 oz) (including battery pack, SD card)

Microphone
Stereo

Speaker
Monaural

Exif Print
Compatible

PRINT Image Matching III
Compatible

Eco and energy saving

Power consumption (Off mode)
Not available

Power consumption (Standby mode/Low power mode)
0.5 W

Power consumption (Networked standby mode)
2.0 W (Bluetooth) / 2.0 W (all terminals and networks connected)

Low power mode activated
Within 20 minutes (default)

Networked standby mode activated
Within 20 minutes (default)

Wireless LAN

WW486983 (see name plate on the bottom of camera)

Supported format
IEEE 802.11 a/b/g/n/ac/ax

Frequency band
2.4 GHz / 5 GHz / 6 GHz

Security

WPA2-PSK (AES)/WPA3-SAE

Connection method

Wi-Fi Protected Setup™ (WPS)/Manual

Access method

Infrastructure mode

WW084220 (see name plate on the bottom of camera)

Supported format

IEEE 802.11 a/b/g/n/ac/ax

Frequency band

2.4 GHz / 5 GHz

Security

WPA2-PSK (AES)/WPA3-SAE

Connection method

Wi-Fi Protected Setup™ (WPS)/Manual

Access method

Infrastructure mode

WW824259 (see name plate on the bottom of camera)

Supported format

IEEE 802.11 b/g/n/ax

Frequency band

2.4 GHz

Security

WPA2-PSK (AES)/WPA3-SAE

Connection method

Wi-Fi Protected Setup™ (WPS)/Manual

Access method

Infrastructure mode

Bluetooth communications

Bluetooth standard Ver. 5.3

Frequency band

2.4 GHz

Rechargeable battery pack NP-FZ100

Rated voltage

7.2 V ⎓

Recommended USB-PD-compatible AC adaptor

Input

100-240 V ∿, 50/60 Hz

Output

9 V ⎓ / 2 A or more

Design and specifications are subject to change without notice.

TP1002161114

5-069-971-11(6) Copyright 2026 Sony Corporation

Trademarks

- “α” and “ α ” are trademarks of Sony Group Corporation.
- XAVC S and XAVC S are trademarks of Sony Group Corporation.
- XAVC HS and XAVC HS are trademarks of Sony Group Corporation.
- Mac is a trademark of Apple Inc., registered in the United States and other countries.
- USB Type-C® and USB-C® are registered trademarks of USB Implementers Forum.
- The terms HDMI™, HDMI High-Definition Multimedia Interface, HDMI Trade dress and the HDMI Logos are trademarks or registered trademarks of HDMI Licensing Administrator, Inc.
- Microsoft and Windows are registered trademarks or trademarks of Microsoft Corporation in the United States and/or other countries.
- SDXC logo is a trademark of SD-3C, LLC.
- The CFexpress™ is a trademark licensed by the CompactFlash Association.
- Wi-Fi, the Wi-Fi logo and Wi-Fi Protected Setup are registered trademarks or trademarks of the Wi-Fi Alliance.
- The Bluetooth® word mark and logos are registered trademarks owned by Bluetooth SIG, Inc. and any use of such marks by Sony Group Corporation and its subsidiaries is under license.
- QR Code is a trademark of Denso Wave Inc.
- In addition, system and product names used in this manual are, in general, trademarks or registered trademarks of their respective developers or manufacturers. However, the ™ or ® marks may not be used in all cases in this manual.

TP1002134105

5-069-971-11(6) Copyright 2026 Sony Corporation

License

Notes on the License

This product comes with software that are used based on licensing agreements with the owners of that software. Based on requests by the owners of copyright of these software applications, we have an obligation to inform you of the following. Licenses (in English) are recorded in the internal memory of your product. Establish a Mass Storage connection between the product and a computer to read licenses in the “PMHOME” - “LICENSE” folder.

THIS PRODUCT IS LICENSED UNDER THE AVC PATENT PORTFOLIO LICENSE FOR THE PERSONAL USE OF A CONSUMER OR OTHER USES IN WHICH IT DOES NOT RECEIVE REMUNERATION TO
(i) ENCODE VIDEO IN COMPLIANCE WITH THE AVC STANDARD (“AVC VIDEO”)
AND/OR
(ii) DECODE AVC VIDEO THAT WAS ENCODED BY A CONSUMER ENGAGED IN A PERSONAL ACTIVITY AND/OR WAS OBTAINED FROM A VIDEO PROVIDER LICENSED TO PROVIDE AVC VIDEO.
NO LICENSE IS GRANTED OR SHALL BE IMPLIED FOR ANY OTHER USE. ADDITIONAL INFORMATION INCLUDING THAT RELATING TO PROMOTIONAL, INTERNAL AND COMMERCIAL USES AND LICENSING MAY BE OBTAINED FROM Via Licensing Alliance LLC
SEE https://www.via-la.com/

Covered by one or more claims of the HEVC patents listed at patentlist.accessadvance.com.

On GNU GPL/LGPL applied software

The software included in this product contains copyrighted software that is licensed under the GPLv2 and other licenses which may require access to source code. You may find a copy of the relevant source code as required under the GPLv2 (and other licenses) at https://www.sony.net/Products/Linux/.

You may obtain the source code as required by the GPLv2 on a physical medium from us for a period of three years after our last shipment of this product by applying through the form at https://www.sony.net/Products/Linux/.
This offer is valid to anyone in receipt of this information.

TP1002110712

5-069-971-11(6) Copyright 2026 Sony Corporation

Troubleshooting

If you experience trouble with the product, try the following solutions.

1. **Remove the battery pack, wait for about one minute, re-insert the battery pack, then turn on the power.**
2. **Initialize the settings.**
3. **Consult your dealer or local authorized service facility. Additional information on this product and answers to frequently asked questions can be found at our Customer Support Website.**
   https://www.sony.net/

Related Topic

- Setting Reset

TP1002110714

5-069-971-11(6) Copyright 2026 Sony Corporation

Warning messages

Set Area/Date/Time.

- Set the area, date and time. If you have not used the product for a long time, charge the internal rechargeable backup battery.

Power insufficient.

- The image copying or the image sensor cleaning function will not operate because the remaining battery level is too low. Recharge the battery pack or supply power by connecting the camera with a computer, etc.

Unable to use memory card. Format?

- The memory card was formatted on a computer and the file format was modified. Select [Enter] and then format the memory card. You can use the memory card again, however, all previous data in the memory card is erased. It may take some time to complete the format. If the message still appears, change the memory card.

Memory Card Error

- An incompatible memory card is inserted.
- Formatting has failed. Format the memory card again.

Unable to read memory card. Reinsert memory card.

- An incompatible memory card is inserted.
- The memory card is damaged.
- The terminal section of the memory card is dirty.

Memory card locked.

- You are using a memory card with a write-protect switch or a delete-protect switch with the switch set to the LOCK position. Set the switch to the record position.

Cannot open the shutter since the memory card is not inserted.

- No memory card has been inserted into the memory card slot selected in [Recording Media] or [Recording Media].
- To release the shutter without inserting a memory card into the camera, set [Release w/o Card] to [Enable]. In this case, images will not be saved.

This memory card may not be capable of recording and playing normally.

- An incompatible memory card is inserted.

Processing...

- When performing noise reduction, the reduction process takes place. You cannot do any further shooting during this reduction process.

Unable to display.

- Images recorded with other products or images modified with a computer may not be displayed.

- Processing on the computer such as deletion of the image files may cause inconsistencies in the image database files. Repair the image database files.

Check that a lens is mounted. For an unsupported lens, set "Release w/o Lens" in the menu to "Enable".

- The lens is not attached properly, or the lens is not attached. If the message appears when a lens is attached, reattach the lens. If the message appears frequently, check whether the contacts of the lens and product are clean or not.
- When attaching the product to an astronomical telescope or similar instrument, or using an unsupported lens, set [Release w/o Lens] to [Enable].

Internal temp. high. Allow it to cool.

- The product has become hot because you have been shooting continuously. Turn the power off and cool the product and wait until the product is ready to shoot again.

(Overheating warning)

- You have been recording images for a long time, the product temperature has risen.

FULL (Database file error)

- The number of images exceeds that for which date management in a database file by the product is possible.

ERROR (Database file error)

- Unable to register to the database file. Import all the images to a computer and recover the memory card.

Image DataBase File error

- There is something wrong in the Image Database File. Select MENU → / (Shooting) → [Media] → [Recover Image DB].

System Error
Camera Error. Turn power off then on.

- Remove the battery pack, and then re-insert it. If the message appears frequently, consult local authorized Sony service facility.

Unable to magnify.
Unable to rotate image.

- Images recorded with other products may not be enlarged or rotated.

Cannot create more folders.

- A folder in the memory card has the first three digits “999.” You cannot create any more folders on this camera.

Related Topic

- Notes on memory card
- Performing initial setup for the camera
- Format
- Release w/o Card
- Release w/o Lens (still image/movie)
- Recover Image DB (still image/movie)

5-069-971-11(6) Copyright 2026 Sony Corporation