November 2025

Installation and Operation Manual

Blackmagicdesign

Blackmagic URSA Broadcast G2

Languages

To go directly to your preferred language, simply click on the hyperlinks listed in the contents below.

English 3

日本語 435

Français 868

Deutsch 1301

Español 1734

中文 2167

한국어 2600

Русский 3033

Italiano 3466

Português 3899

Türkçe 4332

Polski 4765

Українська 5198

Welcome

Thank you for purchasing Blackmagic URSA Broadcast G2!

Blackmagic URSA Broadcast G2 is an incredibly powerful camera designed for both traditional and online broadcasters. The camera's versatile design allows it to work as a 4K production camera, a 4K studio camera or a 6K digital film camera!

Built from strong, lightweight magnesium alloy, your Blackmagic URSA Broadcast G2 is perfectly balanced and comfortable to use all day with physical controls at your fingertips. This means you can change ND filters, shutter speed, white balance, ISO and more without looking away from the viewfinder.

Your URSA Broadcast G2 is compatible with B4 broadcast lenses and records to common file types such as Blackmagic RAW and Apple ProRes, plus highly efficient 10-bit broadcast quality H.264 and H.265. Dual native gain provides fantastic low light performance and is optimized to reduce grain and noise at higher ISOs while maintaining the full dynamic range of the sensor!

We hope you use your URSA Broadcast G2 to produce some of the world's most exciting television programming, documentaries and live studio content. We are extremely excited to see what creative work you produce and would love your feedback on new features you would like to see us add to URSA!

Grant Petty

Grant Petty
CEO Blackmagic Design

Contents

Getting Started 7
Attaching a Lens 7
Powering your Camera 8
Using Servo Zoom Lenses 10
Setting the Back Focus on B4 Lenses 16
Storage Media 20
CFast Cards 20
SD Cards 21
Recording to USB-C flash disks 23
SSDs 24
Preparing Media for Recording 26
Preparing Media on Blackmagic URSA Broadcast G2 26
Preparing Media on Mac 28
Preparing Media on Windows 29
Recording 30
Recording Clips 30
Choosing the Codec, Resolution and Sensor Area 31
Blackmagic RAW 32
Recording to Blackmagic RAW 32
Choosing Frame Rates 35
Triggering Record on External Equipment 38
Record Duration Table 38
Playback 40
Media Pool 41
Controls 42
Playback 42
Group Select 44
Media Filter 44
Storage 44
Uploading Clips to Blackmagic Cloud 45
Logging into Blackmagic Cloud 45
Blackmagic Cloud Projects Panel 47
Uploading Clips to a Blackmagic Cloud Project 47
Selectively Uploading Clips to Projects 49
Upload Original 50
Uploading to Your Blackmagic Cloud Storage 50
Clip Upload Status Indicators 51
Closing the Media Pool 52
URSA Broadcast G2 Connectors and Features 53
Camera Front 53
Left Side 54
Left Side Controls 54
Right Side 56
Rear Panel 57
Top Panel 59
Underside 59
URSA Broadcast G2 Controls 60
Forward Control Panel 60
Ergonomic Control Panel 63
Internal Control Panel 68
Camera Video Outputs 70
HD Monitoring Output 70
12G-SDI Output 70
Touchscreen Controls 72
Upper Toolbar 72
Lower Toolbar 89
Looping playback 95
Settings 96
Dashboard 96
Record Settings 96
File Naming Convention 104
Monitor Settings 105
Audio Settings 111
Setup Settings 115
Presets 134
LUTS 136
Entering Metadata 140
The Slate 140
Gyro Stabilization 145

Streaming Video 147
Smartphone Setup 148
Settings 148
Setting the ATEM Camera ID 149
Creating the XML File 149
Exporting the XML File 149
Loading the XML File 150
URSA Mini Shoulder Kit 151
Blackmagic URSA Viewfinder 154
Mounting and Connecting to Blackmagic URSA Broadcast G2 154
Adjusting the Eyepiece 155
Button Features 155
Menu Settings 156
Blackmagic URSA Studio Viewfinder 160
Mounting and Connecting to Blackmagic URSA Broadcast G2 161
Adjusting the Blackmagic URSA Studio Viewfinder 163
Button Features 166
Menu Settings 168
Blackmagic Zoom and Focus Demands 173
Connecting and Attaching to your Camera 173
Using Blackmagic Focus Demand 175
Using Blackmagic Zoom Demand 176
Mounting Batteries 177
Mounting V-mount or Gold Mount Batteries 177
Using your own Battery Plate 179
URSA Broadcast ENG Kit 181
Product Assembly 181
Accessories Attachment 182
Blackmagic Fiber Converters 183
Getting Started with Blackmagic Fiber Converters 184
About SMPTE Fiber 184
Connecting SMPTE Fiber 186
Why Connections on the Front? 190
Plugging in Camera SDI 191
Plugging in Return SDI Outputs 191
Mounting Blackmagic Camera Fiber Converter 191
Attaching the URSA Studio Viewfinder 194
Plugging in a Talkback Headset 194
Operating the Camera Fiber Converter 195
Selecting a Return Feed 195
Using the Call Button 196
Using Talkback 196
Using Tally 197
Status Indicators 197
Audio Inputs 198
IP Video 199
Power Specifications 199
Additional Camera Controls 200
Operating the Studio Fiber Converter 201
Using the Menu 202
Rack Mounting the Studio Unit 205
Camera Unit Connections 209
Camera Power Connection 209
PTZ Interface 209
Talkback Connection 210
Tracker Interface 211
DC Connection 211
D-Tap Output 212
Reference Output and Operation 212
Studio Unit Connections 213
12G-SDI Output 213
Return SDI Inputs 213
Reference Input and Output 214
Talkback Interface 214
PTZ Interface 215
Audio Outputs 216
Updating Internal Software 217
Updating Blackmagic Camera Fiber Converter 217
Updating Blackmagic Studio Fiber Converter 217
Interchangeable Lens Mount 218
Removing the B4 Mount 219
Blackmagic URSA Mini Pro EF Mount 219

Blackmagic URSA Mini Pro F Mount 221
Blackmagic URSA Mini Pro PL Mount 225
Blackmagic URSA Broadcast G2 B4 Mount 228
Shimming Lens Mounts 229
Blackmagic URSA Mini Pro Shim Kit 229
Shimming mounts 230
URSA Mini Recorder 231
Mounting and connecting URSA Mini Recorder 232
Using URSA Mini Recorder 234
Updating URSA Mini Recorder's internal software 235
Understanding Studio Camera Control 236
Using Camera Control 237
DaVinci Resolve Primary Color Corrector 242
Using DaVinci Resolve 246
Project Manager 247
Editing with the Cut Page 247
Adding Clips to the Timeline 250
Video Only and Audio Only Edits 253
Trimming Clips on the Timeline 253
Toolbar 254
Adding Titles 255
Working with Blackmagic RAW Files 256
Color Correcting your Clips with the Color Page 259
Adding a Power Window 263
Using Plugins 265
Mixing Your Audio 266
Adding VFX and Compositing on the Fusion Page 271
Mastering Your Edit 280
Quick Export 280
The Deliver Page 281
Blackmagic Camera Setup 282
Using Blackmagic Camera Setup 283
Transferring Files over a Network 290
Working with Third Party Software 293
Working with Files from CFast 2.0 and SD cards 293
Working with Files from SSDs 294
Using Final Cut Pro X 294
Using Avid Media Composer 2018 295
Using Adobe Premiere Pro CC 296
Developer Information 297
Camera Control REST API 297
Panel Control API 298
Livestream Control API 300
Clips Control API 306
Monitoring Control API 307
Event Control API 319
System Control API 319
Transport Control API 325
Timeline Control API 333
Media Control API 337
Cloud Control API 340
Slate Control API 345
Preset Control API 357
Audio Control API 359
Lens Control API 365
Video Control API 369
Camera Control API 378
Immersive Control API 381
Color Correction Control API 382
Notification websocket - 1.1.0 387
Device Properties 393
Blackmagic Bluetooth Camera Control 418
Blackmagic SDI and Bluetooth Camera Control Protocol 420
Example Protocol Packets 428
Blackmagic Tally Control Protocol 429
Help 431
Regulatory Notices 432
Safety Information 433
Warranty 434

Getting Started

Getting started with your Blackmagic URSA Broadcast G2 is as simple as mounting a lens and powering your camera.

Attaching a Lens

Your URSA Broadcast G2 comes fitted with a B4 lens mount for HD and Ultra HD broadcast lenses. An additional EF mount is included so you can also use stills lenses, other compact-zoom or EF cine lenses. For instructions on switching lens mount types, refer to the 'Interchangeable lens mount' section later in this manual.

URSA Broadcast G2's B4 mount features optics specifically designed to work with your camera's sensor to produce the same field of view and depth of field as traditional broadcast cameras with 2/3" sensors. This means that if you already have a broadcast background, you can be comfortable mounting your existing B4 lenses to URSA Broadcast G2 and shoot confidently.

To remove the protective dust cap from the camera, rotate the outer locking ring counterclockwise and pull the dust cap away from the mount.

To attach a B4 mount lens:

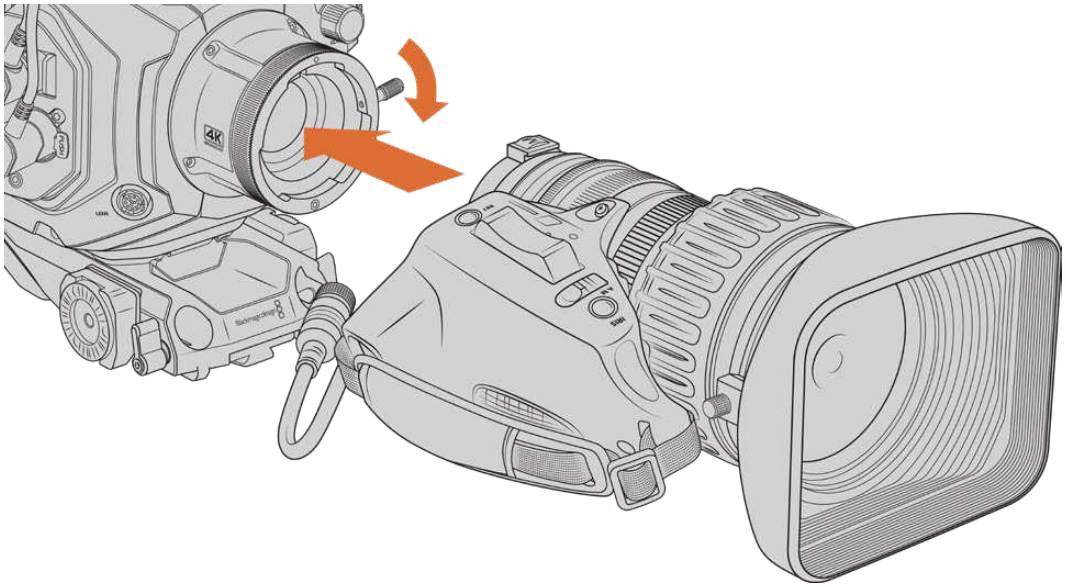

Rotate the locking ring clockwise to secure the lens to the camera

1. Turn the B4 lens locking ring counterclockwise to reveal the alignment slot inside the top of the mount. Align the B4 lens to your URSA Broadcast G2's B4 mount so the alignment pin on the lens matches the position of the alignment slot.
2. Hold the lens against the B4 mount so the mount plates are against each other and make sure the alignment pin is secured inside the alignment slot.
3. Turn the locking ring clockwise to tighten the lens against the mount and lock it into position.
4. To power the lens and provide lens control, simply plug the lens cable into the connector marked 'Lens' on the front of your URSA Broadcast G2's turret. Most B4 lenses will have the 12 pin lens connector and cable built in. This will provide power and control signals from your URSA Broadcast G2 to the lens.

For information on the types of B4 lenses and how to use them with your camera, refer to the 'Using Servo Zoom Lenses' section in this manual.

NOTE When no lens is attached to the camera, the optical element of URSA Broadcast G2's B4 mount is exposed to dust and other debris. Ensure that you keep the dust cap on whenever possible.

Many B4 lenses can be quite long due to their extreme zoom range. When using URSA Broadcast G2 with B4 lenses, your camera's center of gravity will move forward. The URSA Mini shoulder pad included with your camera can be adjusted accordingly.

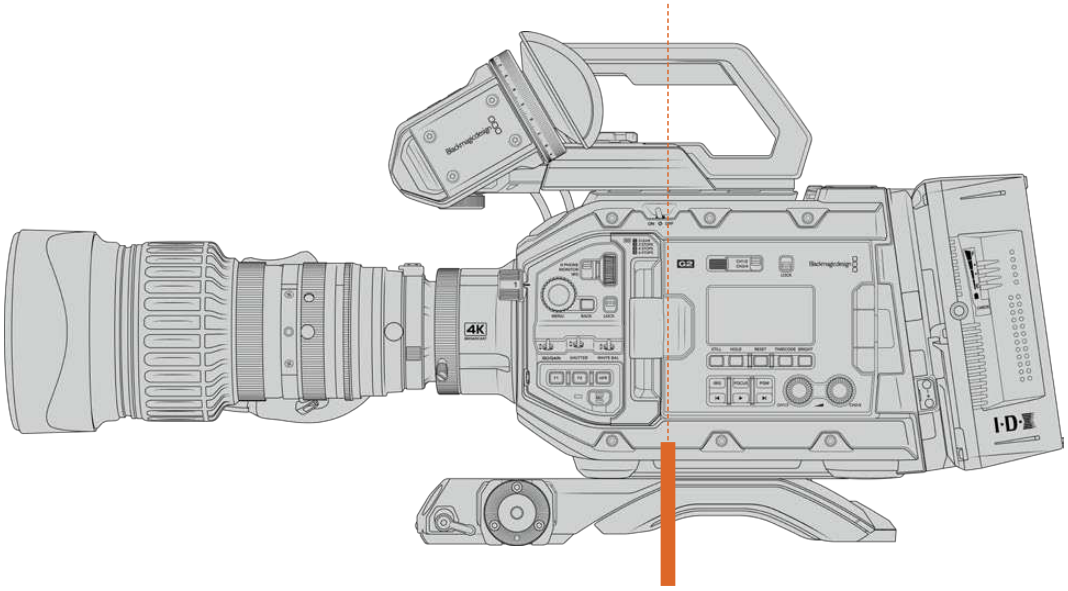

Center of gravity

When mounting URSA Broadcast G2 on the URSA Mini shoulder pad, it's a good idea to mount the camera towards the rear of the shoulder pad base when using longer zoom lenses. This moves your camera rig's center of gravity back over the middle of the pad, making it easier to balance on your shoulder and rest steadily when sitting on a desk or flat surface. Refer to the 'URSA Mini Shoulder Kit' section later in this manual for more information on fitting the shoulder pad.

Powering your Camera

Now that you've attached a lens, you will need to supply power. The quickest way to power your camera is to connect external power using the supplied AC to 12V DC adapter.

To plug in external power:

1. Connect the AC to 12V DC adapter plug to your mains power socket.
2. Connect the AC to 12V DC adapter's 4 pin XLR connector to the 12-18V DC power connector on the camera.

If you have both external and battery power connected, only external power will be used. If you remove external power while a charged battery is connected, your camera will switch to battery power without interruption.

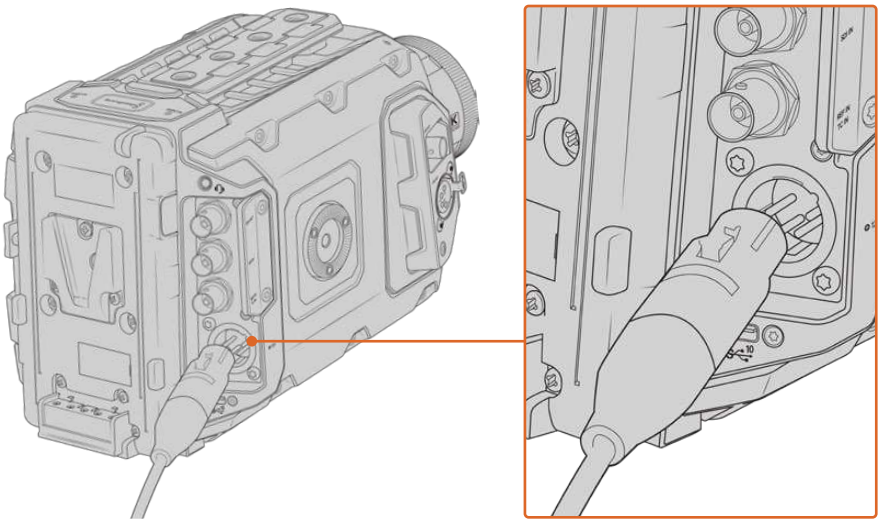

Use the supplied AC to 12V DC adapter to power your Blackmagic URSA Broadcast G2

Blackmagic URSA Broadcast G2 comes fitted with an URSA VLock Battery Plate. This lets you use industry standard V mount batteries with your camera. Refer to the 'mounting batteries' section for more information about mounting different types of battery plates to support different batteries.

To turn on URSA Broadcast G2:

1. Move the power switch, located above the fold out LCD, to the 'on' position.
2. To turn the camera off, move the switch to the 'off' position.

You are now ready to insert your media and start recording!

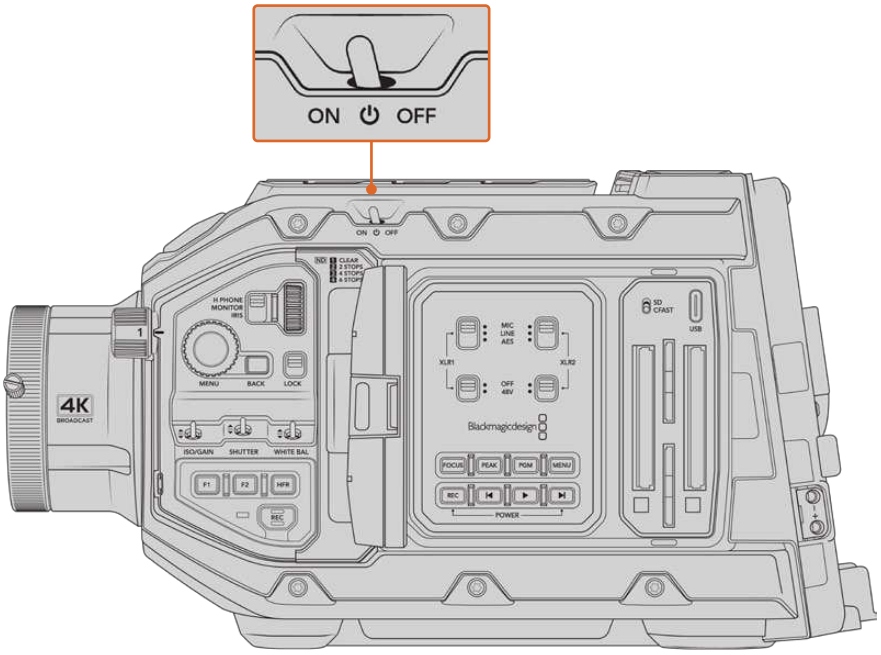

Move the power switch to 'on' to power your camera

URSA Broadcast G2 also features a redundant power switch, which allows the camera to be turned on and off by holding down the 'rec' and 'forward skip' buttons on the inside control panel. While you wouldn't normally power your camera using this method, it is provided as a helpful alternative if the power switch along the top edge is obscured, for example when mounted on a custom rig.

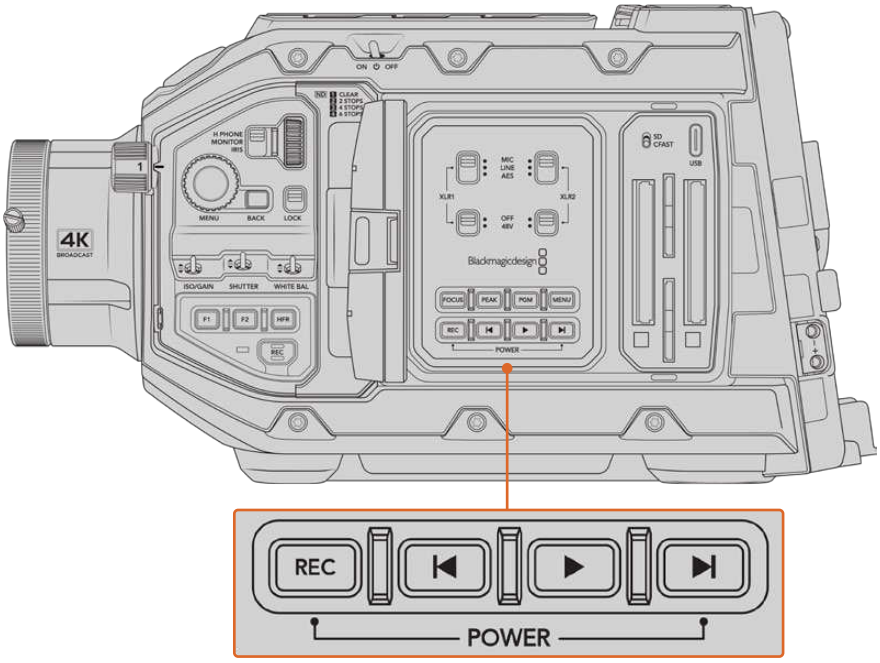

If you need to, you can also hold down the record and forward skip buttons on the control panel behind the LCD to power your camera on or off

TIP If your URSA Broadcast G2 is turned off when the power switch is set to 'on', your camera may have been powered down via Bluetooth® control or by holding down the record and forward skip control panel buttons. Simply toggle the power switch 'off' and 'on,' or hold down the relevant control panel buttons to power the camera on.

Using Servo Zoom Lenses

Your URSA Broadcast G2 natively supports servo driven B4 broadcast lenses. For information on fitting a B4 lens to your camera, refer to the 'attaching a lens' section at the start of this manual.

TIP With the optional URSA Mini Pro PL mount fitted, your URSA Broadcast G2 is also compatible with servo driven PL cine lenses.

B4 broadcast lenses offer several features that aren't typically present in still photography and cinema lenses. In addition to the ability to hold focus through a large zoom range, these lenses are distinguished by handgrip controls and servo driven iris and zoom functions. Some lenses also feature servo driven focus. With the lens connector fitted, iris and zoom can be controlled from the handgrip, from your camera or by using an optional Blackmagic Zoom Demand. You can even control your lens remotely via an ATEM switcher.

Lenses which have a focus servo can accept auto focus commands from the camera, continuously track focus using an optional Blackmagic Focus Demand or receive focus commands from an ATEM switcher.

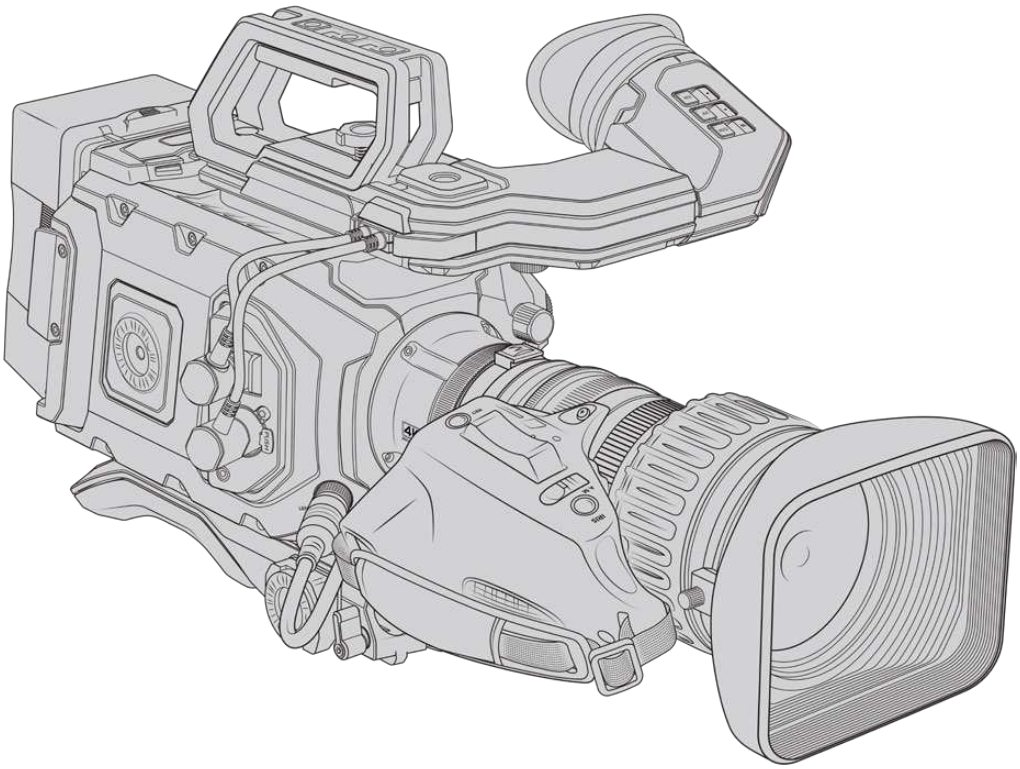

B4 Lenses with iris and zoom control include:

- Fujinon B4 lens models with HA, ZA, XA, UA and LA prefixes in their model name and RM in their suffix. For example, Fujinon **XA**20sxB**RM**.
- Canon B4 lens models with HJ, KJ and CJ prefixes and RSE or RSD in their suffix. For example Canon **KJ**20x8.2B I**RSD**.

B4 Lenses with full servo control for focus, iris and zoom include:

- Fujinon B4 lens models with HA, ZA and UA prefixes in their name and the letters RD or ZD in the suffix. For example, Fujinon **HA**22x7.8 BE**RD**.
- Fujinon box lenses with XA and UA prefix in their name.
- Canon B4 lens models with HJ, KJ..ex and CJ prefixes in their name and the letters ASE or ASD in the suffix. For example, Canon **HJ**24ex7.5B I**ASE**.
- Canon box lenses with XJ and UJ prefix in their name.

TIP Box lens models mentioned above support both zoom and focus servos. Please check with your lens supplier to confirm the servo motors are installed.

Your Blackmagic URSA Broadcast G2 is shipped ready to record to Blackmagic RAW Ultra HD. To confirm your record settings simply press the menu button to open the menu settings on the LCD. The first menu item is the 'record' tab and you can check your codec and resolution settings here. More information on how to use the menu settings is provided later in the manual.

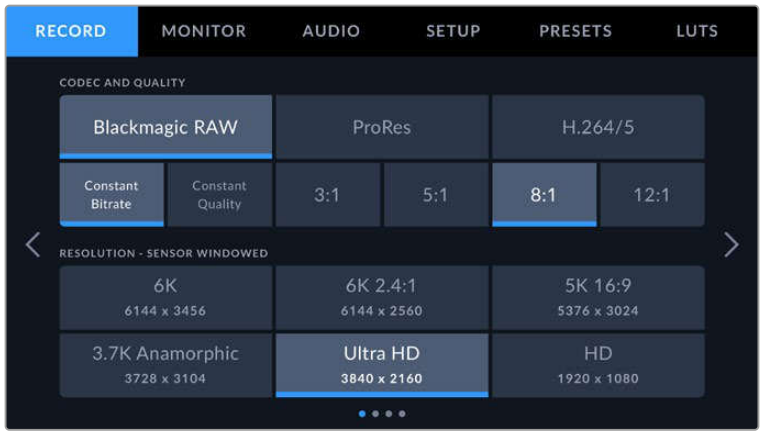

The default Blackmagic RAW settings in the 'record' tab

Ultra HD is also the default resolution for both ProRes and H.265 codecs. If you'd like to shoot in HD that is also available in ProRes or H.264.

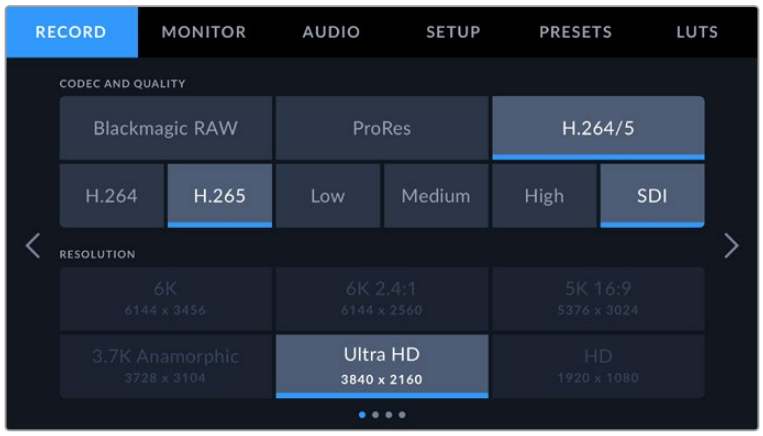

The record tab in the menu settings

TIP If you notice any vignetting in your images when using a B4 lens check that your resolution is set to Ultra HD when set to Blackmagic RAW. If you are recording ProRes or H.264/5, adjusting your camera's 'sensor area' to 4K will suit the optical area that the B4 mount covers. For more information, refer to the 'record settings' section later in the manual.

B4 lens controls

Iris

On the top of most B4 handgrips, you'll find an 'auto/manual' or 'A/M' switch, and a 'push auto' or 'iris' switch. These control your lenses' aperture ring.

Auto

Set this switch to 'auto' or 'a' to adjust your lens aperture via your URSA Broadcast G2, Blackmagic Zoom Demand or an ATEM switcher. You can adjust lens aperture from URSA Broadcast G2 using the iris wheel, internal control panel buttons, touchscreen controls, or iris based auto exposure modes. See the 'URSA Broadcast G2 controls' and 'touchscreen controls' sections in this manual for more details. While in 'auto' mode, the aperture ring on your B4 lens cannot be moved manually.

Manual

Set this switch to 'manual' or 'm' to adjust your lens aperture by turning the iris ring on the lens barrel. In this mode, your lens will not accept aperture commands from your URSA Broadcast G2 or ATEM switcher.

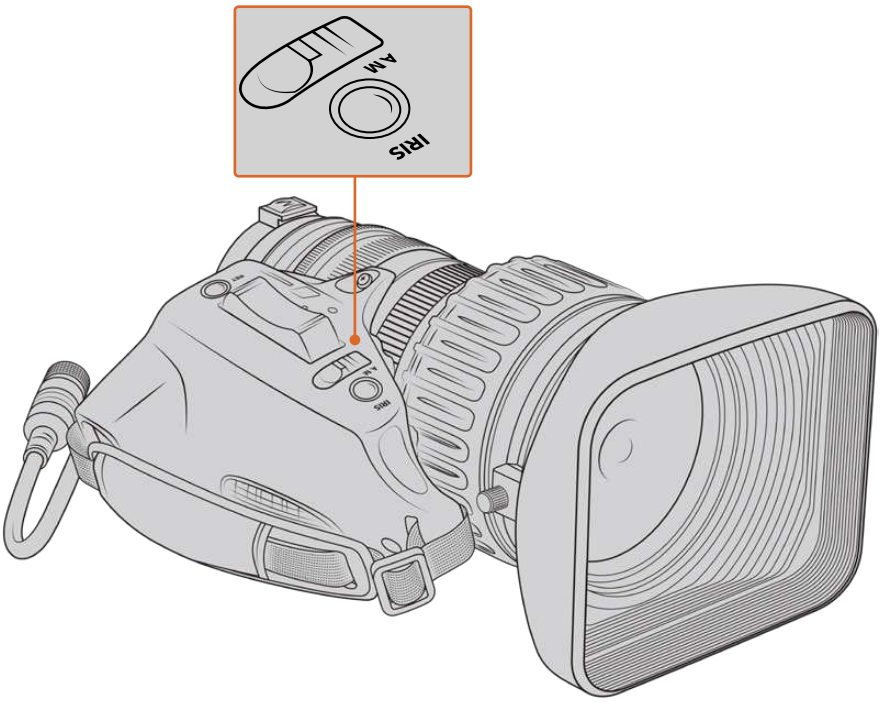

Push Auto/Iris

Use this button to momentarily activate 'auto' aperture control while in 'manual' mode. This can be combined with iris controls on your camera or ATEM switcher to great effect.

For example, with your camera set to an iris based auto exposure mode and your lens aperture set to 'manual,' you can freely adjust your lens iris by using the aperture ring on the lens barrel, however tapping the 'push auto'/'iris' button will momentarily activate auto exposure, adjusting your iris for the current lighting conditions.

Alternatively, you can set an iris value using the controls on your URSA Broadcast G2's LCD touchscreen. While in 'manual' mode, you are free to adjust lens aperture using the aperture ring on the lens barrel, but tapping the 'push auto'/'iris' button will return the lens to the preset value on your touchscreen.

Zoom

On the underside of most B4 handgrips, you'll find a 'zoom' switch that can be set to 'servo' or 'manual.' This controls zoom behavior.

Servo

Set this switch to 'servo' or 's' to enable servo zoom control. In this mode, the rocker switch on your handgrip can be used to zoom your lens in and out, as well as any other zoom related controls, such as zoom speed and quickzoom. Your lens will also accept zoom commands from URSA Broadcast G2, Blackmagic Zoom Demand and ATEM switchers, so long as it is connected to the camera via the lens connector. In this mode, you typically can't adjust your lens's manual zoom ring.

> **TIP** Handgrip zoom rockers are typically linked to zoom speed. Push the rocker down gently to zoom slowly, push down harder to zoom more rapidly.

Manual

Set this switch to 'manual' or 'm' to disable servo control and adjust zoom using the zoom ring on your lens barrel. In this mode, your lens will not accept zoom commands from the handgrip, URSA Broadcast G2, or ATEM switchers.

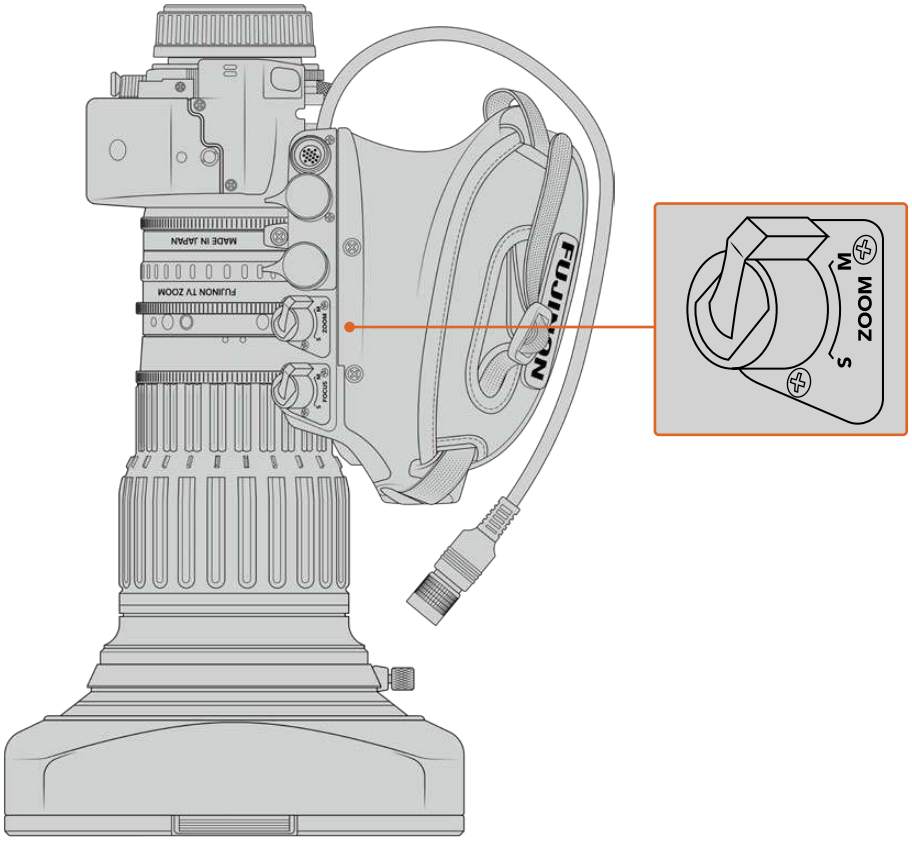

Focus

Some B4 lenses also have focus servo controls. If this control is present on your lens, you'll see a 'focus' switch on the underside of the handgrip with two settings, 'servo' and 'manual.'

Servo

Set this switch to 'servo' or 's' to enable servo focus control. In this mode, your lens can accept focus commands from URSA Broadcast G2, Blackmagic Focus Demand or an ATEM switcher via the lens connector.

Manual

Set this switch to 'manual' to use the focus ring on the lens barrel to control focus. B4 lenses tend to autofocus quite slowly, so using manual control is more common.

NOTE Analog B4 lenses with servos are also supported although the camera will only power the zoom servo and support electronic iris control. Many of them are standard definition and may not have the standard 12 pin broadcast connector. If you are going to use an analog B4 lens, it's important to make sure it is compatible with your camera first as some have limited feature sets. It is also worth testing them for their image circle coverage as some of them may reveal resolution and light fall off towards the edge of the frame.

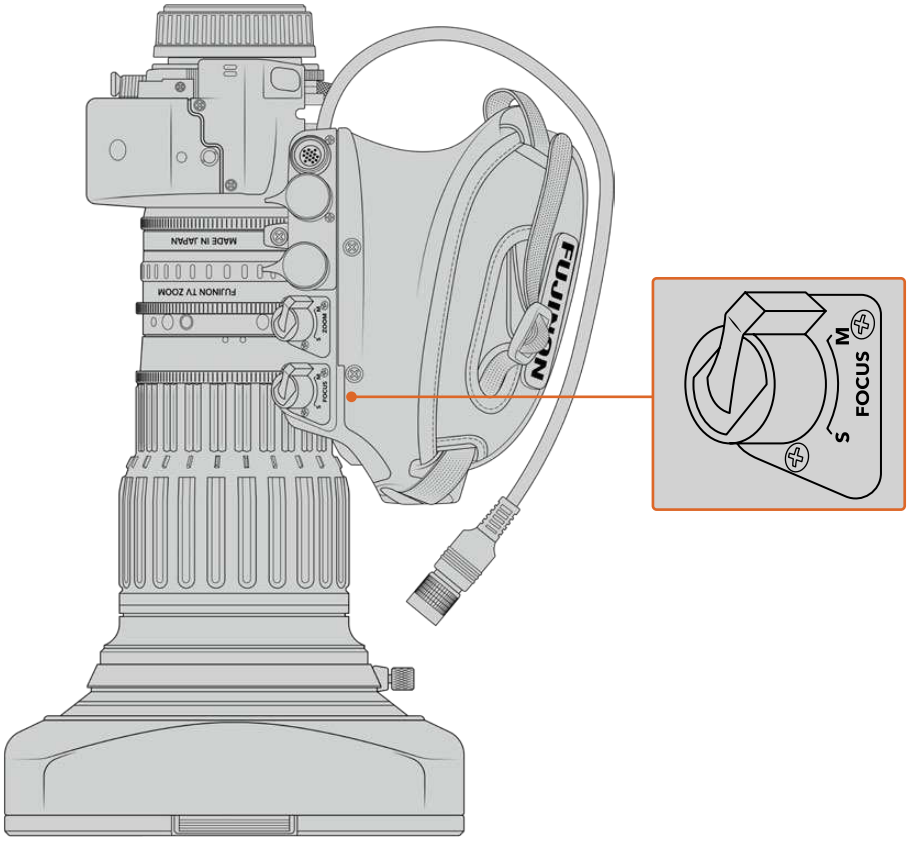

Ret and VTR

On a B4 lens, the ‘vtr’ button toggles recording and the ‘ret’ button is for ‘program return’. For information on how you can configure the ‘vtr’ and ‘ret’ button as function buttons, see the ‘set function button’ section in ‘setup settings’ later in this manual.

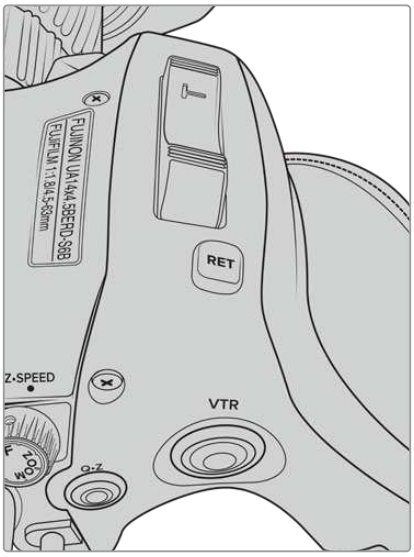

The ‘ret’ and ‘vtr’ buttons on a B4 lens

Setting the Back Focus on B4 Lenses

One of the huge advantages of B4 lenses is that they are designed to be ‘parfocal’ which means they hold focus all the way through the zoom range. This means you can zoom in, get focus on an object and then when you zoom out it will remain in focus.

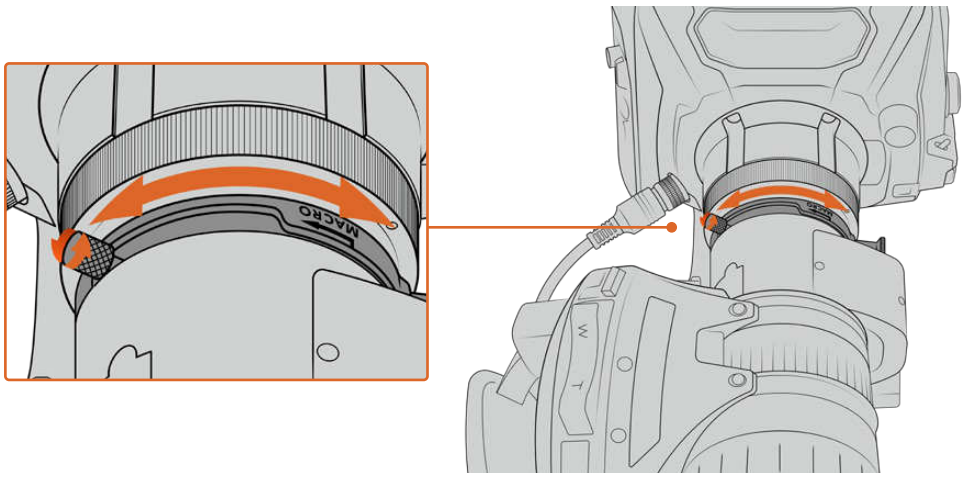

The back focus ring is typically located at the rear of the lens, close to the mount

Back focus is critical in ensuring that your HD or 4K B4 lenses retain focus right through the zoom range. When you first mount a B4 lens on your camera you should check that the back focus is correct. Back focus should also be checked when you swap lenses, and it’s a good idea to periodically check back focus at the start of major projects.

To check the back focus of a B4 lens:

1. Place a focus test chart, or a flat white item with good high contrast detail, approximately seventy feet, or as far away as possible, from the camera.
2. Set the iris on the lens wide open and compensate for exposure by using the built in NDs if you need to. You'll want a shallow depth of field so you can exaggerate any focus issues.
3. Zoom into the chart and set focus.
4. Now zoom out. If you reach maximum wide and the focus remains sharp, then your back focus is correct and you don't need to make any adjustments.

   However, if you zoomed out and the chart drifted out of focus, the back focus is incorrect. Zoom all the way out and adjust the back focus ring on the rear of the lens close to the mount. The back focus ring typically has a twist knob used to loosen and tighten. Simply loosen the twist knob and rotate the ring until your chart is in focus.
5. Now zoom in and out slowly and check if your chart remains in focus all the way through the zoom.
6. Repeat steps 4 and 5, zooming in and out and making adjustments to the back focus ring. If your lens holds focus all the way through the zoom range your back focus is now set correctly.

Setting back focus on Fuji LA16x8 BRM lenses

The process of setting back focus on a Fuji LA16x8 BRM lens is slightly different. Instead of an external back focus ring this lens sets back focus electronically using a button underneath the hand grip.

To set back focus on a Fuji LA16x8 BRM lens:

1. Place a focus test chart, or a flat white item with good high contrast detail, approximately seventy feet, or as far away as possible, from the camera.
2. Set the zoom switch underneath the lens handgrip to 'servo'.
3. Locate the 'F.f.' button next to the zoom switch. Press and hold the 'F.f.' button for 5 seconds. The indicator LED on top of the zoom rocker will flash red.
4. The lens will automatically zoom in. Set focus using the focus ring. It's important to note that if you have Blackmagic Focus Demand attached you will need to unplug it from your camera to adjust the physical focus ring or adjust the focus using the focus demand for this step and step 5.
5. Press the 'F.f.' button again and the lens will automatically zoom out. Set focus using the focus ring.
6. Press the 'F.f.' button to confirm the settings. The top indicator LED will flash red. The electronic back focus on your Fuji LA16x8 BRM lens is now set.
7. Now zoom in and out slowly and check if your chart remains in focus all the way through the zoom.
8. If your lens holds focus all the way through the zoom range your back focus is now set correctly. If you need to make further adjustments, repeat steps 3 to 6.

TIP As temperature changes and wear over time can have subtle effects on the back focus, it's worth regularly checking the back focus on B4 lenses to ensure it stays accurate.

Using Box Lenses

Large studio box lenses like Fujinon's UA27x6.5 and UA125x8 and Canon's UHD Digisuper series lenses can also be used with URSA Broadcast G2's B4 mount. These types of box lenses allow horizontal and vertical image stabilization on studio style 27x lenses, as well as extreme zoom ranges with 80x and even 125x magnification which are incredible for broadcasting sports and outdoor events.

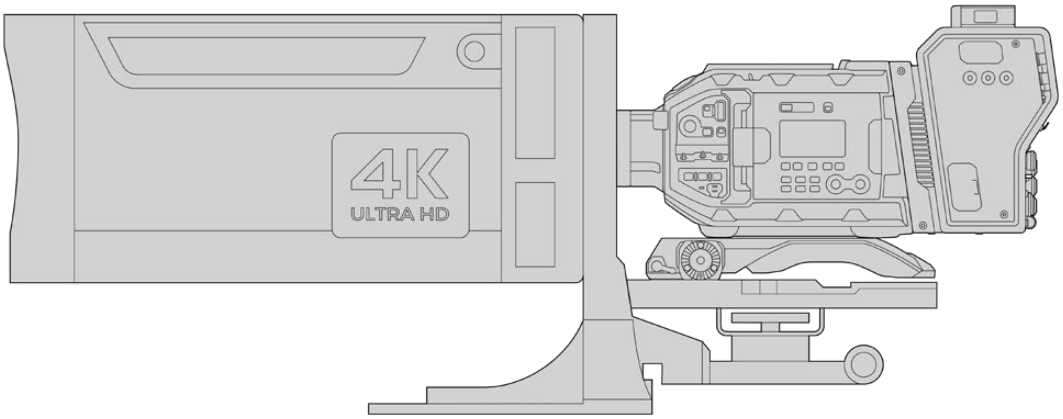

The large size of box lenses means that you will need to setup your camera correctly on a heavy duty tripod or pedestal, with adequate spacing. This is possible with URSA Mini Shoulder Kit, a VCT-14 plate and a box lens adapter.

Box lenses have a high power draw, and need to be powered separately. You can add additional power to the lens by using an URSA 12 volt power supply, or if you are using Blackmagic Camera Fiber Converter, you can run additional power from the 12 volt D-tap output on the side of the unit. Plug the lens connector from the lens support bracket into URSA Broadcast G2.

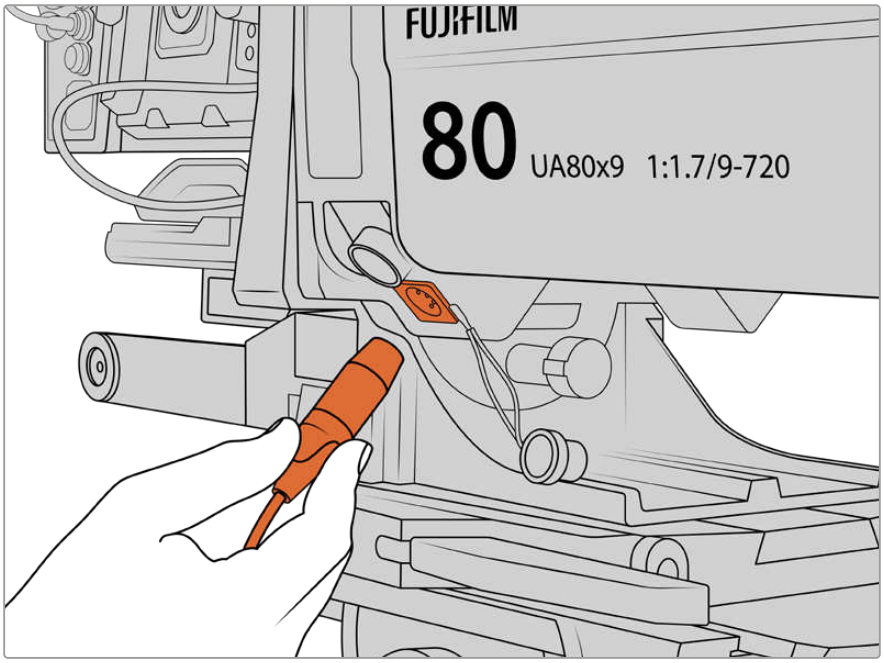

Add additional power to your box lens by plugging in a 4 pin XLR cable

Once additional power is connected, you can power up your camera and control the lens with your URSA Broadcast G2.

PL Servo Zoom Lenses

PL zoom lenses used for motion pictures can also be used with your URSA Broadcast G2. When using servo driven PL or EF lenses, the full 6K sensor area of URSA Broadcast G2 can be used to get the most out of these lenses. For more information on setting the sensor area on your URSA Broadcast G2, refer to the 'record settings' section later in this manual.

Super 35mm PL lenses with full servo control of focus, iris and zoom include:

Brand	Series	Model	Range	Max. Aperture
Fujinon	Cabrio	ZK2.5x14-SAF	14-35mm	T2.9
Fujinon	Cabrio	ZK4.7x19-SAFB	19-90mm	T2.9
Fujinon	Cabrio	ZK12x25 with ESM-15A-SA	25-300mm	T3.5-3.85
Fujinon	Cabrio	ZK3.5x85-SAF	85-300mm	T2.9-T4
Fujinon	Cabrio	XK6x20	20-120mm	T3.5
Canon	Cine-servo	CN7x17KAS S	17-120mm	T2.9-3.9
Canon	Cine-servo	CN10x25 IAS S/P1	25-250mm	T2.95-3.95
Canon	Cine-servo	CN20x50	50-1000mm	T5-8.9

Focus and zoom controls can also be used to drive focus and zoom from the pan handles in a studio environment on all of the servo zoom lenses listed above.

Hybrid Compact Servo Zoom Lenses

Recently, a new category of lenses known as 'compact-servo' zoom lenses have been introduced. These have some of the functionality of B4 and PL servo zoom lenses but use an EF mount. The zoom rocker for these lenses can be powered through the lens mount from URSA Broadcast G2 and information such as lens name, iris, focus and zoom position values are all able to be read and recorded by URSA Broadcast G2's lens metadata system.

Electronic control of the focus, iris and zoom is available with these lenses. When connected to a switcher, these can also be controlled remotely via ATEM Software Control. If you are operating in a live broadcast or studio environment, use of these lenses with Blackmagic Zoom and Focus Demands is possible provided the iris switch on the barrel of the lens is set to 'A', the focus switch is set to 'AF', and the zoom servo switch is set to 'servo'.

Lenses in this range include:

- Canon CN-E 18-80mm T4.4 Compact-servo
- Canon CN-E 70-200mm T4.4 Compact-servo

Storage Media

Your Blackmagic URSA Broadcast G2 uses standard SD cards, faster UHS-II SD cards or CFast 2.0 cards to record video.

Using the rear USB-C 3.2 Gen 2x1 port, you can connect high speed flash disks or high capacity solid state drives. You can also record to SSDs using the optional Blackmagic URSA Mini Recorder. For more information on connecting URSA Mini Recorder to your camera, refer to the 'URSA Mini Recorder' section later in this manual.

Important Notes About Media Speeds

Write and read speeds published by recording media manufacturers are often based on peak speeds for small files such as still images, and may not accurately reflect write speeds for a continuous stream of high speed video.

For reliable recording with your chosen frame rates, use only the cards recommended by Blackmagic Design.

CFast Cards

CFast 2.0 cards are capable of supporting very high data rates, so are perfect for recording HD and 4K video at high frame rates. Refer to the record duration table in the 'recording' section for details on the maximum frame rates that can be recorded in each format.

It's important to note that while CFast 2.0 cards are generally high speed cards, some cards have slower write speeds compared to read speeds, and maximum data rates can differ between models. For reliable recording with your chosen frame rates, use only the cards recommended by Blackmagic Design.

Inserting a CFast Card

To record using CFast cards you need to set your camera accordingly. To do this, set the storage media switch above the media slots to the 'CFAST' position.

To insert a CFast card.

1. Open the fold out monitor to access the CFast slots.
2. With the label of the CFast card facing towards the touchscreen, insert the card into the CFast card slot until you feel it lock in place. The card should insert easily without the need for excessive force. Push the CFast card ejector button underneath the CFast card slot to eject the card.

   The storage information at the bottom of the LCD touchscreen will show the name and record time remaining of the detected CFast cards.

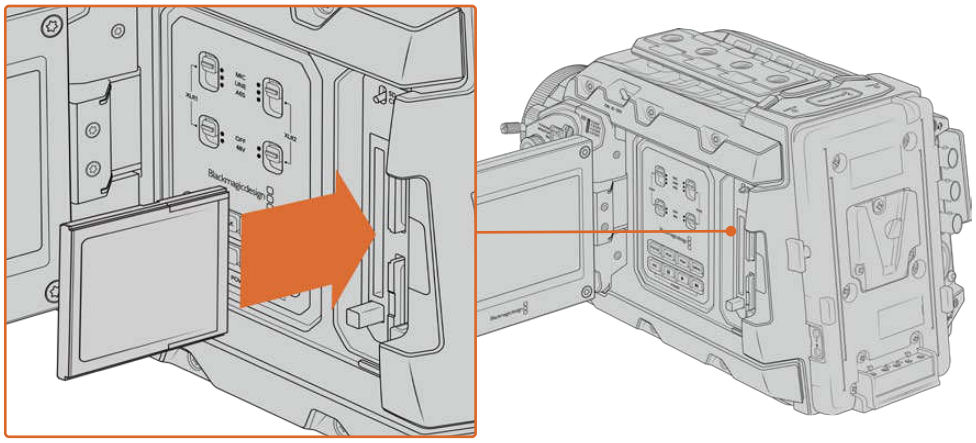

Blackmagic URSA Broadcast G2 has two CFast slots for continuous recording

TIP If you have CFast cards inserted but can not access them on the camera, check you have CFast selected on the storage media selection switch located above the media slots.

Choosing a CFast 2.0 Card

When working with high data rate video it's important to carefully check the CFast card you would like to use. This is because CFast 2.0 cards have different read and write speeds. For the most up to date information on supported CFast cards on Blackmagic URSA Broadcast G2, please refer to the Blackmagic Design support center at https://www.blackmagicdesign.com/support/faq/59037.

SD Cards

In addition to CFast 2.0 cards, Blackmagic URSA Broadcast G2 can record on high speed UHS-I and UHS-II type SD cards. Using high end SDXC UHS-II cards, you can record ProRes HQ footage in Ultra HD or even 6K in Blackmagic RAW!

With SD cards, you can use more affordable storage media when shooting compressed video formats in HD. SDXC and SDHC are a very common media storage format for consumer still and video cameras.

If you've ever shot video using a DSLR, or use a Blackmagic Micro Cinema Camera, Pocket Cinema Camera or Blackmagic Video Assist, you probably already have compatible SD cards to use.

For projects that don't require the highest resolution Blackmagic RAW files, or for when long recording durations are needed, using SD cards can be very economical. Lower capacity and lower speed SD cards can also be used for storing and loading LUTs and Presets.

Inserting an SD Card

To insert an SD Card.

1. Open the fold out monitor to access the SD card slots. These are the smaller slots located between the CFast slots.
2. Set the storage media toggle switch above the slots to 'SD'.
3. With the label on the SD card facing away from the touchscreen, insert the card until you feel it lock into place. To remove an SD card, push the SD card in to eject it.

4 The storage indicator at the bottom of the LCD touchscreen will show the name and record time remaining of detected cards.

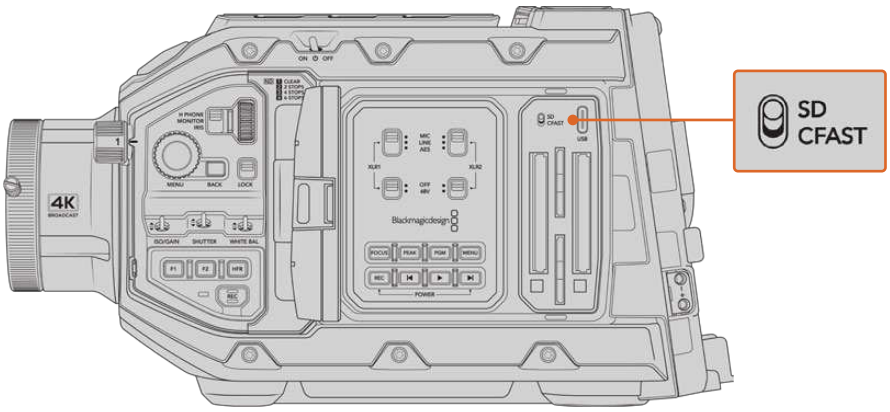

When recording to SD cards on URSA Broadcast G2 make sure the storage media selection switch is set to 'SD'

Choosing a fast SD Card

If you are recording Ultra HD, then we recommend using the fastest high speed UHS-II type SD cards available. It's important to use high speed UHS-II SD cards for Ultra HD and HD recording, or UHS-1 cards for HD recording. These cards are rated for fast data speeds and support larger storage sizes. Generally the faster the cards, the better.

Before using your cards, you will need to format them to either HFS+ or exFAT formats. You can format your media with the storage manager or your computer. For more information, see the 'preparing media for recording' section.

If you want to, you can format your cards using a Mac or Windows computer. When using your media on Mac, you can use HFS+ which is the Mac disk format. If you are using Windows then you should use exFAT format, which is the Windows disk format that Mac computers can also read.

For the most up to date information on supported SD cards on Blackmagic URSA Broadcast G2, please refer to the Blackmagic Design support center at https://www.blackmagicdesign.com/support/faq/59037.

NOTE When filming high frame rate or Ultra HD footage on your URSA Broadcast G2, we recommend CFast 2.0 or SD UHS-II recording media, which are typically faster and available in higher storage capacities than SD UHS-I media.

Locking and Unlocking SD Cards

SD cards can be write protected, or 'locked', to prevent data from being overwritten.

When inserting an SD card, make sure the card is not write protected. Write protection is disabled by moving the plastic switch on the left side of the card to the position closest to the connectors. After recording, you can then write protect the card by sliding the switch back down to the bottom position.

Move the lock tab up or down
to lock or unlock an SD card

Your URSA Broadcast G2 will let you know if you've inserted a locked SD card by displaying a 'locked' icon on the LCD touchscreen and storage menu. If the card is locked, you won't be able to record video, capture stills, or export LUTs and presets until it is unlocked.

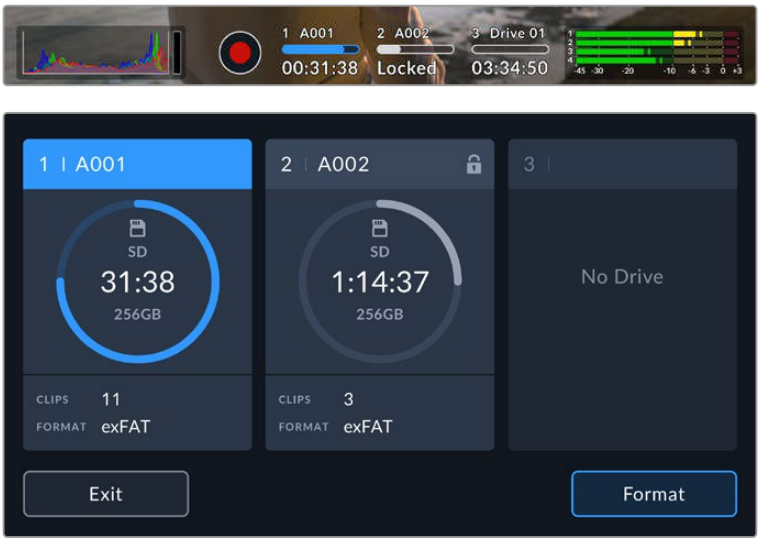

Your URSA Broadcast G2 will indicate when locked SD storage media is inserted

Recording to USB-C flash disks

Blackmagic URSA Broadcast G2 features two USB-C ports. The USB-C 3.1 Gen 1 port on the side near the CFast card slots is for software updates. The port on the rear panel near the SDI connectors is for recording to high speed SSDs and USB-C flash disks via USB-C 3.2 Gen 2x1. These fast, high capacity drives allow you to record video for longer periods, which can be important when filming events with long durations.

When a USB-C flash disk is connected to your camera, it occupies the third media slot in your camera's operating system. Tapping the drive name in the storage menu sets it as the active drive. This means that recording, playback and storage management is exactly the same for USB-C flash disks as it is for CFast, SD cards and SSDs.

Once you have finished recording you can connect the same drive directly to your computer for editing and post production without having to copy media across.

To connect a USB-C flash disk:

1. Connect one end of a USB type-C cable to your USB-C flash disk.
2. On your URSA Broadcast G2, plug the USB-C cable into the USB-C port on the back panel below the SDI ports.
3. The USB-C flash disk will occupy the third media slot on your camera's LCD touchscreen.

4 To switch recording to the USB-C flash disk, press and hold the drive name in the lower toolbar of your camera's LCD display. The media bar will turn blue to indicate that the camera will now be recording to the USB-C flash disk. When recording the media bar will turn red.

Choosing a fast USB-C flash disk

USB-C flash disks are designed to offer fast, affordable storage for a wide range of devices and are readily available from a variety of consumer electronics outlets. It's important to note that film making is only one part of the USB-C flash disk market, so choosing the best drive is vital to making sure you have enough speed to record Blackmagic RAW and Ultra HD footage.

Many USB-C flash disks are designed for home computing and aren't fast enough to record Ultra HD.

For the most up to date list of recommended USB-C flash disks please go to https://www.blackmagicdesign.com/support/faq/59037.

Use Blackmagic Disk Speed Test to accurately measure whether your USB-C flash disk will be able to handle high data rate video capture and playback. Blackmagic Disk Speed Test uses data to simulate the storage of video so you get results similar to what you'll see when capturing video to a disk. During Blackmagic testing, we have found newer, larger models of USB-C flash disk and larger capacity USB-C flash disks are generally faster.

Blackmagic Disk Speed Test is available from the Mac app store. Windows and Mac versions are also included in Blackmagic Desktop Video, which you can download from the 'capture and playback' section of the Blackmagic Design support center at www.blackmagicdesign.com/support.

SSDs

With the optional Blackmagic URSA Mini Recorder, URSA Broadcast G2 can record video directly to solid state drives, or 'SSDs'. These fast, high capacity drives are readily available from a variety of consumer electronics outlets.

URSA Mini Recorder features a USB-C port enabling high speeds to work with standard 2.5" SATA SSDs as well as 7mm U.2 SSDs. M.2 solid state drives will work when using an M.2 to U.2 adapter. To reach the proper speeds available, a certified USB 3.1 Gen 2 cable is required. The supplied USB-C cable features locking connectors at each end to maintain a secure connection during use.

NOTE See the section 'Blackmagic URSA Mini Recorder' in this manual for information on installing Blackmagic URSA Mini Recorder.

Inserting an SSD

To insert an SSD:

1 Hold your SSD with the connection pins facing towards the front of your camera.

2 Open the spring loaded cover on Blackmagic URSA Mini Recorder and gently insert the SSD into the slot.

TIP Blackmagic URSA Mini Recorder has a pressure plate to keep different sized SSDs in place, so there's no need to use spacers to fit your drive.

3 Once your SSD is all the way into the slot gently push it home until you feel it register, then lower URSA Mini Recorder's cover.

4 The SSD will occupy the third media slot on your camera.

5 To switch recording to the SSD, press and hold the drive name in the lower toolbar of your camera's LCD display. The media bar will turn blue to indicate that the camera will now be recording to the SSD. When recording the media bar will turn red.

To remove an SSD:

Open URSA Mini Recorder's cover and gently grasp the drive between your thumb and forefinger. There's a small recess in the top of the bay to let you get a grip on the drive. Simply pull the drive out and close the cover.

Choosing a fast SSD for URSA Mini Recorder

SSDs are designed to offer fast, affordable storage for a wide range of devices. It's important to note that film making is only one part of the SSD market, so choosing the right drive is vital to ensuring that you have enough bandwidth to record Blackmagic RAW or Ultra HD footage. Many SSDs are designed for home computing and aren't fast enough to record Ultra HD video.

We highly recommend using only the SSDs from our recommended list, which have been tested with Blackmagic URSA Broadcast G2 to ensure support for continuous filming at the specified resolutions. For the most up to date list of recommended SSDs please go to https://www.blackmagicdesign.com/support/faq/59031.

Important Notes About SSD Speed

Some models of SSD can't save video data at the speed the manufacturer claims. This is due to the disk using hidden data compression to attain higher write speeds. This data compression can only save data at the manufacturer's claimed speed when storing data such as blank data or simple files. Video data includes video noise and pixels which are more random so compression will not help, therefore revealing the true speed of the disk.

Some SSDs can have up to 50% lower write speed than the manufacturer's claimed speed. Even though the disk specifications claim an SSD has speeds fast enough to handle video, in reality the disk isn't fast enough when used to store video data for real time capture.

Use Blackmagic Disk Speed Test to accurately measure whether your SSD will be able to handle high data rate video capture and playback. Blackmagic Disk Speed Test uses data to simulate the storage of video so you get results similar to what you'll see when capturing video to a disk. During Blackmagic's rigorous testing, we have found newer, larger models of SSD and larger capacity SSDs are generally faster.

Preparing Media for Recording

You can format your recording media using Blackmagic URSA Broadcast G2's storage manager, or via a Mac or Windows computer. We recommend formatting storage media using URSA Broadcast G2 for best performance.

HFS+ is also known as OS X Extended and is the recommended format as it supports 'journaling'. Data on journaled media is more likely to be recovered in the rare event that your media becomes corrupted. HFS+ is natively supported by Mac OS. ExFAT is supported natively by Mac and Windows without needing to purchase any additional software. However, exFAT does not support journaling.

NOTE Before formatting your media, it's important to make sure the media storage switch has been set correctly to either SD card or CFast card. Always check the settings carefully before formatting.

Preparing Media on Blackmagic URSA Broadcast G2

1 Tap any storage indicator at the bottom of the LCD touchscreen to open the media pool, then tap the media storage icon at the top of the touchscreen to enter the storage manager.

Tap the media storage icon to open the storage manager

2 Tap a format button at the bottom of the touchscreen to format the card in slot 1 or 2, respectively. If you have a USB-C flash disk or SSD connected to the rear USB-C port of your URSA Broadcast G2, tap the 'Drive List' button. Then select the drive you want to format and tap 'Format Drive'.

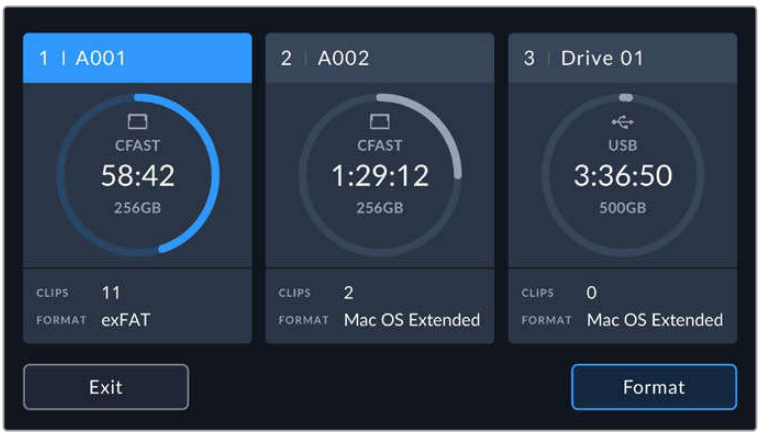

Use your URSA Broadcast G2's storage manager to format your camera's storage media

3 If you want to change the reel number, tap on the pencil icon to open the keyboard. Type the new reel number and tap 'update'.

4 Choose OS X Extended or exFAT format and tap the 'format' button.

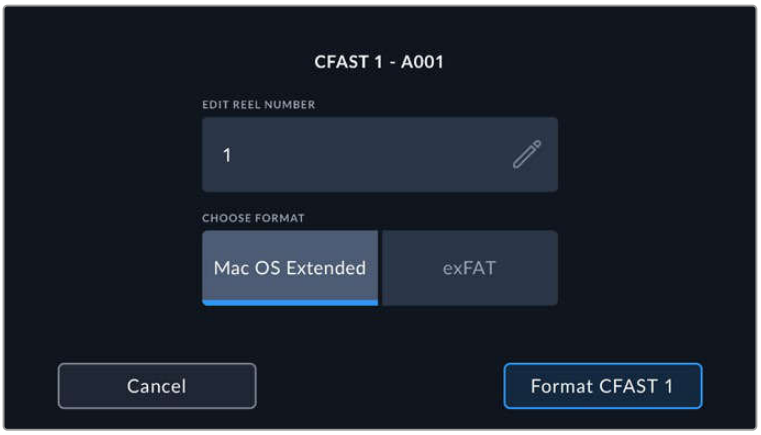

Tap the pencil icon to manually edit the reel number

5 You will be asked to confirm your selection. Tap the format button again to continue or 'cancel' to cancel the format.

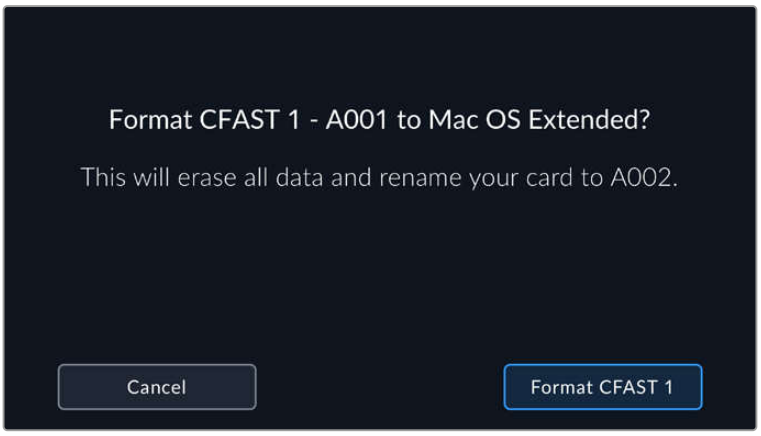

Check that you have selected the correct card before formatting

6 You will be prompted to press and hold the 'format' button for 3 seconds. The camera will notify you once formatting is complete.

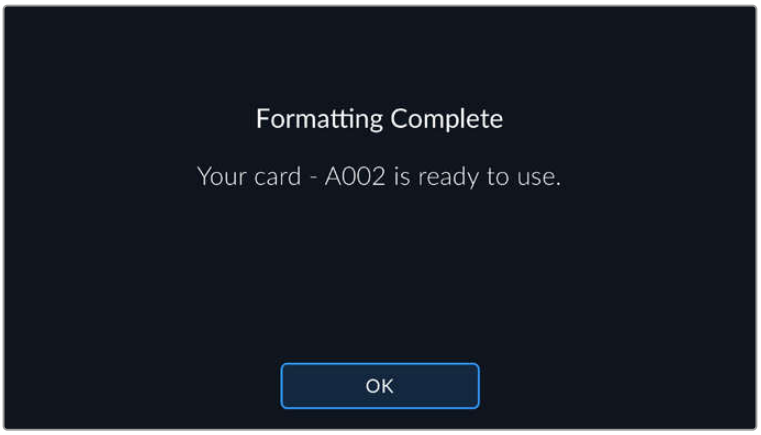

When formatting is complete your card is ready to use

7 Tap 'ok' to return to the storage manager.

8 Tap 'exit' to leave the storage manager.

When formatting recording media using the storage manager, your URSA Broadcast G2 will use the Camera ID from the slate and reel number to name the card. Your camera automatically increments reel numbers each time you format. If you need to manually enter a specific reel number, tap the 'pencil icon' and enter the number you want to format the card as.

When you start a new project, reel numbering will reset to 1 when you tap on 'reset data' in the 'project' tab of the slate.

It's worth mentioning that if your camera's media storage switch is set to SD or CFast, only the selected card type will be formatted when you tap 'format card'. For information on switching between CFast and SD storage see the 'SD Cards' section earlier in this manual.

The storage manager on your URSA Broadcast G2 will indicate whether you are currently managing CFast, SD, USB or SSD media

TIP If your URSA Broadcast G2 is set to record to SD cards and you have inserted a locked card, you will be unable to format that card. A padlock icon will appear next to the card's name in the storage manager. Simply unlock the card to format and record. For more information on locking SD cards, see the 'SD cards' section of this manual.

Preparing Media on Mac

The Disk Utility application included with Mac can format your CFast card, SD card, or SSD in the HFS+ or exFAT formats.

Make sure you back up anything important from your media as all data will be lost when it is formatted.

1. Connect the storage media to your computer using a card reader, dock or adapter, and dismiss any message offering to use your media for Time Machine backups.
2. Go to applications/utilities and launch Disk Utility.
3. Click on the disk icon for your camera's storage media and then click the 'erase' tab.
4. Set the 'format' to 'Mac OS extended (journaled)' or 'exFAT'.
5. Type a 'name' for the new volume and then click 'erase'. Your camera's storage media will quickly be formatted and made ready for use.

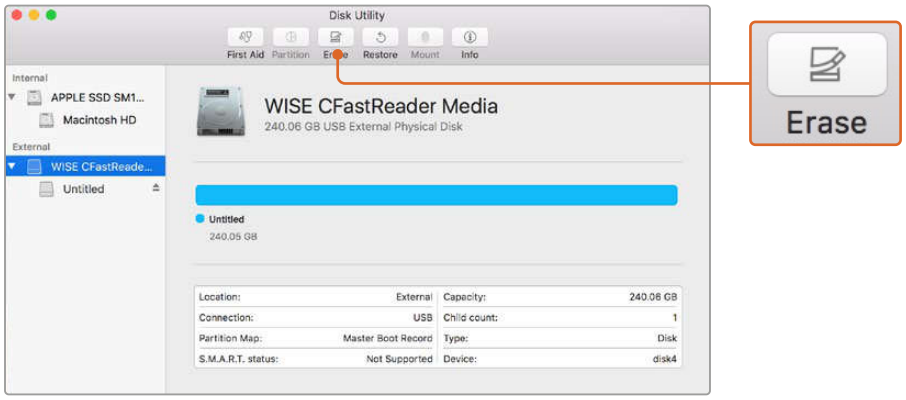

Use Disk Utility on Mac OS to erase your CFast card in the Mac OS extended (journaled) or exFAT format

Preparing Media on Windows

The 'format' dialog box can format a drive in the exFAT format on a Windows PC. Remember to back up anything important from your media as all data will be lost when it is formatted.

1. Connect your camera's storage media to your computer using an external reader/writer or SSD dock or adapter.
2. Open the 'start' menu or 'start' screen and choose 'computer'. Right click on your camera's storage media.
3. From the contextual menu, choose 'format'.
4. Set the file system to 'exFAT' and the allocation unit size to 128 kilobytes.
5. Type a volume label, select 'quick format' and click 'start'.
6. Your storage media will quickly be formatted and made ready for use.

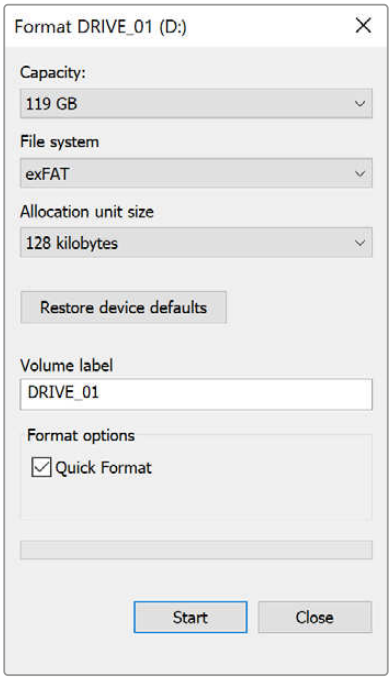

Use the 'format' dialog box feature in Windows to format your CFast, SD card or SSD in the exFAT format

NOTE If your recordings are dropping frames, check that your card is on our list of recommended media for the codec and frame size you are using. For lower data rates try lowering your frame rate, resolution, or try a compressed codec such as ProRes. Check the Blackmagic Design website for the latest information at www.blackmagicdesign.com

Recording

Recording Clips

B4 broadcast lenses typically have a record button positioned on the lens handle where your thumb would be when shooting from the shoulder. Simply press the record button on the handle to start recording. Press again to stop recording.

Your camera has record buttons built into the camera itself. A record button is located on the inside control panel, and on the forward control panel for convenient access when shooting from the shoulder.

Triggering Record from External Sources

Using the 'Blackmagic Camera Control' app you can trigger recording remotely and adjust various camera settings via Bluetooth from your iPad. For more information on setting up and using the 'Blackmagic Camera Control' app refer to the 'Bluetooth' section later in this manual. If you are using an iPhone or Android smart phone there are also third party apps available that let you trigger recording on your URSA Broadcast G2 via Bluetooth.

If you are using an optional Blackmagic Zoom Demand with your URSA Broadcast G2, you can trigger record using the function button. The function button on Blackmagic Zoom Demand sits under your thumb like the VTR button on a B4 lens. For more information on Blackmagic Zoom Demand, refer to the 'using Blackmagic Zoom Demand' section later in this manual.

When your Blackmagic URSA Broadcast G2 is connected to an ATEM Mini Pro or Extreme model switcher via a Blackmagic Micro Converter BiDirectional SDI/HDMI 3G, you can trigger recording from the ATEM switcher.

For example, the 'record stream' palette in ATEM Software Control has a checkbox labeled 'record in all cameras'. When this checkbox is enabled and you click or press record, all connected cameras will start recording as well. This means you only have to click or press one button to start recording on all cameras simultaneously. Refer to the ATEM Mini manual for more information.

Another option for starting and stopping record is to attach an external LANC controller to your URSA Broadcast G2's LANC input and trigger the record externally. For example, you may want to attach a LANC controller to your tripod so you can trigger the recording without taking your hands off the focus ring and tripod handle.

You can also trigger record on one or more URSA Broadcast G2 cameras using a Blackmagic 3G-SDI Shield for Arduino and the Blackmagic SDI Camera Control protocol. For more information, see the 'Developer Information' section of this manual or visit www.blackmagicdesign.com/developer and download the manual for Blackmagic 3G-SDI Shield for Arduino.

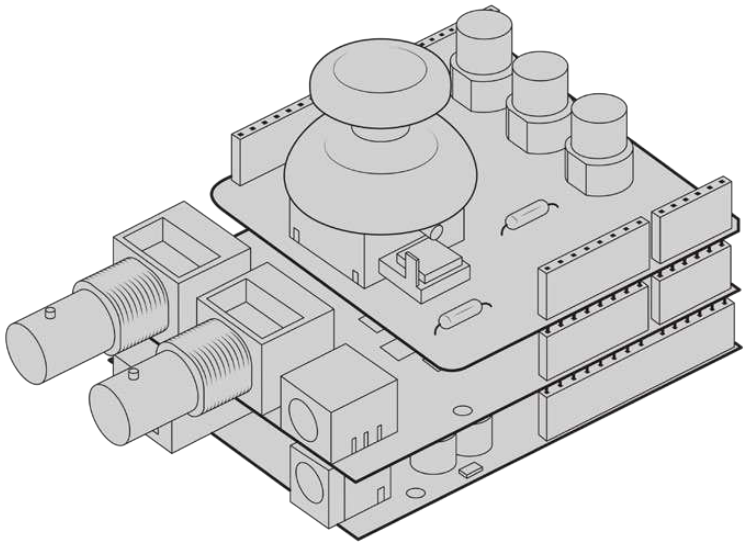

You can create your own hardware controller and plug it into your Blackmagic 3G-SDI Shield for Arduino for more interactive and refined control.

NOTE If you toggle the 'storage media selection' switch mid-recording, the camera will complete the current recording before switching to the other type of media. This ensures that you can not damage your recording if the switch is adjusted during a take.

Choosing the Codec, Resolution and Sensor Area

Your Blackmagic URSA Broadcast G2 can record using Blackmagic RAW with either a constant quality or constant bitrate setting. You can also use Apple ProRes, H.264 or H.265 compressed video codecs for recording in Ultra HD and HD resolutions. Sensor frame rate options will vary depending on the codec and resolution you choose.

Blackmagic RAW lets you use either a constant quality or constant bitrate compression. Blackmagic RAW 8:1, 12:1, Q3 or Q5 compression is recommended for ENG style shooting as its high compression offers long recording times with minimal visual reduction of image quality. For shots that contain a large amount of fine detail you can choose Blackmagic RAW 3:1 or Q0 for the highest level of image quality.

It's worth noting that clips recorded using Blackmagic RAW are compatible with DaVinci Resolve, Blackmagic RAW Player and other applications that support Blackmagic RAW SDK. Blackmagic RAW has already been adopted by many post production platforms. It may not be supported natively in all editing software but most work with the plugins provided in our Camera Update and Blackmagic RAW installer. For more information, see the 'Working with Third Party Software' section.

Blackmagic RAW

Blackmagic URSA Broadcast G2 supports the new Blackmagic RAW file format. This format offers superior image quality, wide dynamic range and a broad selection of compression ratios. Blackmagic RAW features all the user benefits of RAW recording, but the files are very fast because most of the processing is performed in the camera where it can be hardware accelerated by the camera itself.

Blackmagic RAW also includes powerful metadata support so the software reading the files knows your camera settings. If you like shooting in video gamma because you need to turn around edits quickly and you don't have time for color correction, then this metadata feature means you can select video gamma, shoot in video gamma, and the file will display with video gamma applied when you open it in software. However underneath, the file is actually film gamma and the metadata in the file is what's telling the software to apply the video gamma.

So what all this means is if you want to color grade your images at some point, then you have all that film dynamic range preserved in the file. You don't have your images hard clipped in the whites or the blacks, so you retain detail and you can color grade to make all your images look cinematic. However, if you don't have time for color grading, that's fine because your images will have the video gamma applied and look like normal video camera images. You are not locked in on the shoot and you can change your mind later during post production.

Blackmagic RAW files are extremely fast and the codec is optimized for your computer's CPU and GPU. This means it has fast smooth playback and eliminates the need for hardware decoder boards, which is important for laptop use. Software that reads Blackmagic RAW also gets the advantage of processing via Apple Metal, Nvidia CUDA and OpenCL.

This means that Blackmagic RAW plays back at normal speed like a video file on most computers, without needing to cache it first or lower the resolution.

It's also worth mentioning that lens information is recorded in the metadata on a frame by frame basis. For example, when using compatible lenses, any zoom or focus changes performed over the length of a clip will be saved, frame by frame, to the metadata in the Blackmagic RAW file.

Recording to Blackmagic RAW

Blackmagic RAW works in two different ways. You have a choice to use either the constant bitrate codec, or the constant quality codec.

The constant bitrate codec works in a similar way to most codecs. It tries to keep the data rate at a consistent level and won't let the data rate go too high. This means even if you are shooting a complex image that might need a bit more data to store the image, a constant bitrate codec will just compress the image harder to make sure the images fit within the space allocated.

This can be fine for video codecs, however when shooting RAW you really want to ensure the quality is predictable. What would happen if the images you were shooting needed more data, but the codec just compresses harder to make a specified data rate? It's possible you could lose quality, but not be sure it's happening until you return from a shoot.

To solve this problem, Blackmagic RAW also has an alternative codec choice called constant quality. This codec is technically called a variable bitrate codec, but what it's really doing is allowing the size of the file to grow if your images need extra data. There is no upper limit on the file size if you need to encode an image but maintain quality.

So Blackmagic RAW set to the constant quality setting will just let the file grow as big as it needs to be to encode your images. It also means the files could be larger or smaller depending on what you are shooting. I guess if you leave your lens cap on the lens, you won't waste space on your media!

It is also worth noting that the quality settings for Blackmagic RAW are not obscure names, but are more meaningful as they are derived from what's happening technically. So for example when you have selected the constant bitrate codec, you will see quality settings of 3:1, 5:1, 8:1 and 12:1. These are the ratios of the uncompressed RAW file size vs the file sizes you should expect when shooting in Blackmagic RAW. 3:1 is better quality as the file is larger, while 12:1 is the smallest file size with the lowest quality. Many users of Blackmagic RAW find that 12:1 has been perfectly ok and they have not seen any quality limitations. However it's best to experiment and try various settings for yourself.

When using Blackmagic RAW in constant quality you will see the settings are Q0, Q1, Q3 and Q5. These are the compression parameters passed to the codec and they are setting how much compression is applied in a more technical way. This setting is different because the codec operates differently between constant bitrate vs constant quality. In this constant quality setting, you really cannot tell what the file size ratio will become as it varies a lot based on what you are shooting. So in this case the setting is different and the file will become the size needed to store your media.

Constant Bitrate Settings

The names for 3:1, 5:1, 8:1 and 12:1 represent the compression ratio. For example, 12:1 compression produces a file size roughly 12 times smaller than uncompressed RAW.

Constant Quality Settings

Q0, Q1, Q3 and Q5 refer to different levels of quantization. Q5 has a greater level of quantization but offers a greatly improved data rate. As mentioned above, the constant quality setting can result in files that grow and shrink quite a lot, depending on what you are shooting. This also means it's possible to shoot something and see the file size increase to beyond what your media card can keep up with. It could result in dropped frames. However the benefit is that you can instantly see if this happens on a shoot and then investigate your settings vs quality.

Blackmagic RAW Player

The Blackmagic RAW player included in your Blackmagic camera's software installer is a streamlined application for reviewing clips. Simply double click on a Blackmagic RAW file to open it, and you can quickly play and scroll through the file with its full resolution and bit depth.

When decoding frames, the CPU acceleration in the SDK library supports all main architectures, and also supports GPU acceleration via Apple Metal, Nvidia CUDA and OpenCL. It also works with the Blackmagic eGPU for extra performance. Blackmagic RAW player is available for Mac, Windows and Linux.

Sidecar Files

Blackmagic RAW sidecar files let you override metadata in a file without overwriting embedded metadata in the original file. This metadata includes the RAW settings as well as information on iris, focus, focal length, while balance, tint, color space, project name, take number and more. Metadata is encoded frame by frame over the duration of the clip, which is important for lens data if the lens is adjusted during a shot. You can add or edit metadata in sidecar files with DaVinci Resolve or even a text editor because it's a human readable format.

Sidecar files can be used to automatically add new RAW settings to a playback simply by moving the sidecar file into the same folder as the corresponding RAW file. If you move the sidecar file out of the folder and reopen the Blackmagic RAW file, the RAW settings are not applied and you see the file as it was originally shot. Any software that uses the Blackmagic RAW SDK can access these settings. Changes made are saved in the sidecar file and can then be seen by Blackmagic RAW Player or any other software capable of reading Blackmagic RAW files.

When shooting video gamma, the file stays in film gamma, and the metadata tells the Blackmagic RAW processing to display using video gamma. Video gamma is great when you don't want to grade the image and want to deliver content quickly, however if you want to pull up the black parts of the image, or pull down the white areas, all the detail is retained. You never clip the video and all the detail is still there if you want to access it at any time.

Blackmagic RAW in DaVinci Resolve

Settings can be adjusted for each Blackmagic RAW file, and then saved as a new sidecar file from the RAW tab in DaVinci Resolve for creative effect or optimized viewing. This also means you can copy your media for another DaVinci Resolve artist and they will have access to your modified gamma settings automatically on import. In addition to the other metadata your camera files contain, DaVinci Resolve can read your selected dynamic range, so your clips will automatically display in DaVinci Resolve with 'film', 'extended video' or 'video' dynamic range.

You can then customize these settings by adjusting the saturation, contrast and midpoint, as well as the highlight and shadow rolloff. Any adjustments can then be saved as a sidecar file, so the changes can be seen by anyone else working with the files in post. You can always return to the original camera metadata at any time.

You can also export a single Blackmagic RAW frame from the RAW tab in DaVinci Resolve, which contains all adjustments, metadata, full resolution and color information so it is easy to share a single frame grab or reference file with others.

For more information on how to use Blackmagic RAW in DaVinci Resolve, see the 'Using DaVinci Resolve' chapter in this manual.

Blackmagic RAW Software Development Kit

The Blackmagic RAW Software Development Kit is an API developed by Blackmagic Design. You can use the Blackmagic RAW SDK to write your own applications to use the Blackmagic RAW format. This SDK library can be used by any developer to add support for reading, editing, and saving Blackmagic RAW files. The Blackmagic RAW SDK includes all the generation 4 and generation 5 color science so you can achieve organic cinematic images across any app that supports it. The Blackmagic RAW SDK supports Mac, Windows and Linux, and is available as a free download from the developer page of the Blackmagic website at www.blackmagicdesign.com/developer

The following diagram illustrates the components of the Blackmagic RAW API:

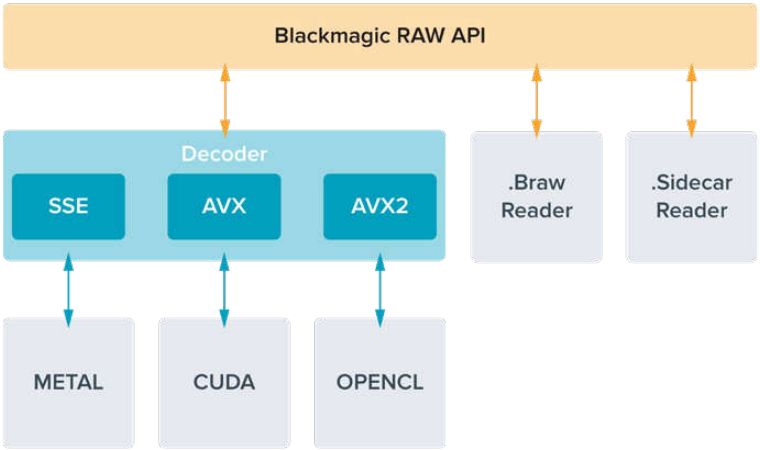

Choosing Frame Rates

Your camera is able to shoot video using many different frame rates and you may be wondering which is the best one to use. Your camera's sensor frame rate can also have a big impact on the 'look' of footage. Generally, when selecting a sensor frame rate, there are some common items to consider. For many years, there have been presentation standards for film and television. These have set frame rates that differ between countries, but all share the same purpose; to display an efficient number of frames every second that portrays pleasing and convincing motion.

Cinema, for example, uses a standard 24 frames per second and while there have been recent experiments with faster frame rates, 24 frames per second remains widely accepted for international audiences. Television frame rates have generally conformed to technical broadcast standards for each country. For example, if you were making television content you would typically record using 29.97 frames per second for North American distribution, and 25 frames per second for Europe.

However, as technology has improved, today we have more choices and broadcast standards are changing. It is now common for sporting events to be recorded and broadcasted at higher frame rates. For example, some sporting events are recorded and broadcasted at up to 59.94 frames per second in North America, and 50 frames per second in Europe. This provides smoother motion on fast action and appears more lifelike. Alternatively, streaming and online broadcasters normally use frame rates similar to television, however there is more freedom to experiment due to user selectable viewing formats, and being limited only to what the audience's screens are capable of displaying.

Generally, when choosing a frame rate for a project, let your delivery format guide your choice. This means your clips will play back at the same speed the event happened in real life. To achieve this, you will need to turn off the 'off speed' option on your camera.

If you are looking to create an interesting effect, for example slow motion, then you can set the sensor frame rate to a higher setting. The higher the sensor frame rate compared to the project frame rate, the slower the playback speed.

For more information on using off speed sensor frame rates to achieve creative effects, refer to the 'touchscreen controls' section.

Shooting at High Frame Rates

When shooting at high frame rates, your camera captures an increased number of frames per second when compared with the traditional sync speed frame rates of 24, 25 and 30 frames per second. This means that the image sensor has less time to collect light for each frame it captures and the resulting image from your camera will be darker.

So for example, if you switch from 25 to 50 frames per second, the amount of light reaching the sensor will be halved. To maintain your exposure you need to compensate for this change by opening up your lens an extra stop, by opening up your shutter angle from 180° to 360° or by adding some extra lighting to the scene that you are shooting.

When shooting at 60 frames per second you have 2.5 times less light than 24 frames per second so you may need to adjust multiple things such as lens aperture, shutter angle and lighting to achieve the same level of exposure.

Another thing to be mindful of when shooting at higher frame rates, is the fact that electronic light sources can add flicker to your recorded image. Artificial light sources such as tungsten, fluorescent and LED may introduce some flicker to your images. You may not see these flicker issues when previewing the scene on your LCD and SDI feed or while recording, so it's important to perform a test shoot with the lights you plan to use and to play the clip back to check for flicker.

Your shutter setting can also affect the visibility of flicker when shooting under lights, so your URSA Broadcast G2 can automatically calculate and display flicker free shutter options for your current frame rate. Note that the characteristics of individual light sources may still cause flicker even when using flicker free values. For more information, refer to the 'touchscreen controls' section.

If you have opened up your shutter to the slowest shutter speed or widest shutter angle possible and are still seeing flicker in recorded footage, you may need to consider using different light sources for your scene or look into using a faster lens.

Maximum Sensor Frame Rates and Data Rates

The table below contains available codecs and resolutions with their maximum sensor frame rates and data rates. It should be noted that the references to Blackmagic RAW, ProRes 444 and ProRes 422 are references to all of the supported variants within each particular codec.

Because of the data rates required for recording high resolutions in slow motion you will need to choose a fast CFast card, USB-C flash disk or SSD. Refer to the 'storage media' section for more information.

TIP You can test the speed your card can sustain by switching on the 'stop recording' option from the 'if card drops frame' settings menu and recording a test clip. This will allow you to test how long you can shoot at a particular frame rate in any given resolution. If the card stops recording too quickly, moving to the next available compression setting or resolution will lower the data rate and make it easier for the card to maintain.

Maximum Frame Rates for URSA Broadcast G2

	Resolution	Codec	Max Frame Rate	Max Data Rate
Ultra HD	3840x2160	Blackmagic RAW 3:1	60	254 MB/s
	3840x2160	Blackmagic RAW 5:1	60	152 MB/s
	3840x2160	Blackmagic RAW 8:1	60	96 MB/s
	3840x2160	Blackmagic RAW 12:1	60	64 MB/s
	3840x2160	Blackmagic RAW Q0	60	48.7 - 96.8 MB/s
	3840x2160	Blackmagic RAW Q1	60	32.6 - 77.6 MB/s
	3840x2160	Blackmagic RAW Q3	60	21.9 - 55.6 MB/s
	3840x2160	Blackmagic RAW Q5	60	13.4 - 32.6 MB/s
	3840x2160	ProRes HQ	60	220 MB/s
	3840x2160	ProRes 422	60	148 MB/s
	3840x2160	H.265 SDI	60	24.6 MB/s
	3840x2160	H.265 High	60	21.6 MB/s
	3840x2160	H.265 Medium	60	15.6 MB/s
	3840x2160	H.265 Low	60	6.4 MB/s

	Resolution	Codec	Max Frame Rate	Max Data Rate
HD	1920x1080	Blackmagic RAW 3:1	150	161.4 MB/s
	1920x1080	Blackmagic RAW 5:1	150	97.2 MB/s
	1920x1080	Blackmagic RAW 8:1	150	61.1 MB/s
	1920x1080	Blackmagic RAW 12:1	150	41 MB/s
	1920x1080	Blackmagic RAW Q0	150	121.2 - 241.6 MB/s
	1920x1080	Blackmagic RAW Q1	150	81.8 - 193.4 MB/s
	1920x1080	Blackmagic RAW Q3	150	54.4 - 138.4 MB/s
	1920x1080	Blackmagic RAW Q5	150	33 - 81.1 MB/s
	1920x1080	ProRes HQ	120	110 MB/s
	1920x1080	ProRes 422	120	74 MB/s
	1920x1080	H.264 SDI	60	14 MB/s
	1920x1080	H.264 High	60	11.2 MB/s
	1920x1080	H.264 Medium	60	6.4 MB/s
	1920x1080	H.264 Low	60	3.6 MB/s

It's important to note that Blackmagic RAW Q0, Q1, Q3 and Q5 use variable bit rate compression to achieve constant quality. Q0, Q1, Q3 and Q5 data rates depend on the complexity of the image subject matter and can vary considerably throughout a clip.

To select your desired codec and resolution:

1. Press the 'menu' button on the control panel.
2. Navigate to the first page of the 'record' tab.
3. Tap your desired combination of codec, quality, and resolution.
4. Press 'menu' to exit.

Recording Formats and Project Frame Rates

After setting your codec and resolution, you should set your 'project' and 'sensor' frame rates. Refer to the 'recording' section in this manual for more information about frame rates.

The project frame rates available are:

23.98, 24, 25, 29.97, 30, 50, 59.94, and 60 frames per second.

When using Blackmagic RAW and ProRes codecs up to ProRes 422 HQ, the maximum project frame rate is 60 frames per second at all resolutions.

Triggering Record on External Equipment

Your URSA Broadcast G2 automatically sends a signal via the SDI outputs that will trigger recording when connected to equipment that supports the SDI trigger record feature, such as Blackmagic Video Assist. This means when you press record on your camera, your external SDI equipment will also start recording, and will stop recording when you press record again.

You will also need to set your equipment to enable SDI trigger recording to make sure it responds to the trigger signal from your URSA Broadcast G2. If your SDI equipment supports SDI trigger recording, it can usually be enabled using your SDI equipment's settings menu.

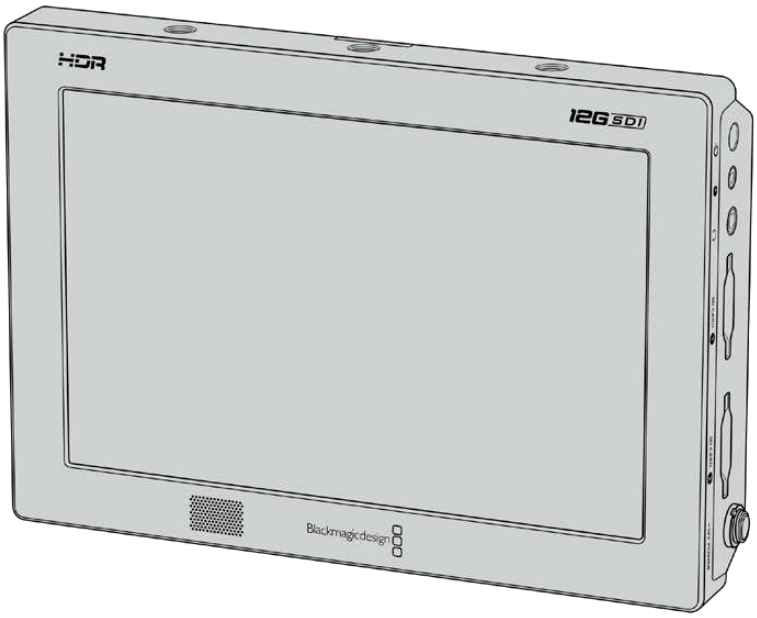

You can trigger recording on other SDI video equipment, for example Blackmagic Video Assist 12G HDR, using the trigger record feature on your camera

Record Duration Table

Tables are provided showing approximate record duration in minutes and seconds compared to format, project frame rate and media size. The maximum recording duration for your storage media depends on its capacity, the recording format and the frame rate. For example, the storage rate for Apple ProRes 422 HQ at 3840 x 2160 is approximately 880 Mbps. At 24 frames per second, you can record approximately 47 minutes of video on a 256GB CFast 2.0 or SD card. At the same settings you can record approximately 23 minutes of video on a 128GB CFast 2.0 or SD card, which is approximately half the record duration of the 256GB card.

It should be noted that record duration on CFast 2.0 and SD cards can also vary slightly between cards from different manufacturers. It can also vary depending on whether the storage media is formatted as ExFat or Mac OS Extended.

Simple scenes containing less detail tend to require less data than more dense compositions. The values in these tables assume shots with a high complexity, which means you may get slightly longer record times depending on the nature of your shoot.

HD							
CFast Card	**Frame Rate**	**ProRes 422 HQ**	**ProRes 422**	**H.264 SDI**	**H.264 High**	**H.264 Medium**	**H.264 Low**
		Duration	Duration	Duration	Duration	Duration	Duration
256GB	23.98	189 mins	283 mins	635 mins	782 mins	1395 mins	2456 mins
	24	189 mins	283 mins	635 mins	782 mins	1395 mins	2456 mins
	25	182 mins	271 mins	602 mins	748 mins	1339 mins	2321 mins
	30	152 mins	227 mins	496 mins	612 mins	1118 mins	2079 mins
	50	91 mins	137 mins	371 mins	462 mins	841 mins	1852 mins
	60	76 mins	114 mins	331 mins	411 mins	716 mins	1520 mins

ULTRA HD					
CFast Card	**Frame Rate**	**Blackmagic RAW 3:1**	**Blackmagic RAW 5:1**	**Blackmagic RAW 8:1**	**Blackmagic RAW 12:1**
		Duration	Duration	Duration	Duration
256GB	23.98	41 mins	68 mins	110 mins	164 mins
	24	41 mins	68 mins	109 mins	164 mins
	25	39 mins	66 mins	105 mins	157 mins
	30	33 mins	55 mins	88 mins	131 mins
	50	19 mins	33 mins	52 mins	79 mins
	60	16 mins	27 mins	44 mins	66 mins

ULTRA HD							
CFast Card	**Frame Rate**	**ProRes 422 HQ**	**ProRes 422**	**H.265 SDI**	**H.265 High**	**H.265 Medium**	**H.265 Low**
		Duration	Duration	Duration	Duration	Duration	Duration
256GB	23.98	47 mins	71 mins	353 mins	404 mins	571 mins	1499 mins
	24	47 mins	71 mins	353 mins	404 mins	571 mins	1499 mins
	25	45 mins	68 mins	339 mins	389 mins	550 mins	1442 mins
	30	38 mins	57 mins	286 mins	325 mins	461 mins	1223 mins
	50	22 mins	34 mins	242 mins	280 mins	389 mins	960 mins
	60	18 mins	28 mins	241 mins	277 mins	325 mins	809 mins

Recording Motion Sensor Data

Your Blackmagic URSA Broadcast G2 Camera automatically records gyro data from the internal motion sensor. DaVinci Resolve can then use this data to stabilize clips. For more information refer to the ‘gyro stabilization’ section in this manual.

Playback

Playing Back Clips

Once you have recorded your video, you can use the transport control buttons to play back your clips.

Press the 'play' button once for instant playback and you'll see your recorded video on URSA Broadcast G2's LCD touchscreen. Your clips can also be viewed on any display connected to your URSA Broadcast G2's SDI outputs. Your URSA Broadcast G2 has playback and transport controls buttons on both the internal and ergonomic control panels.

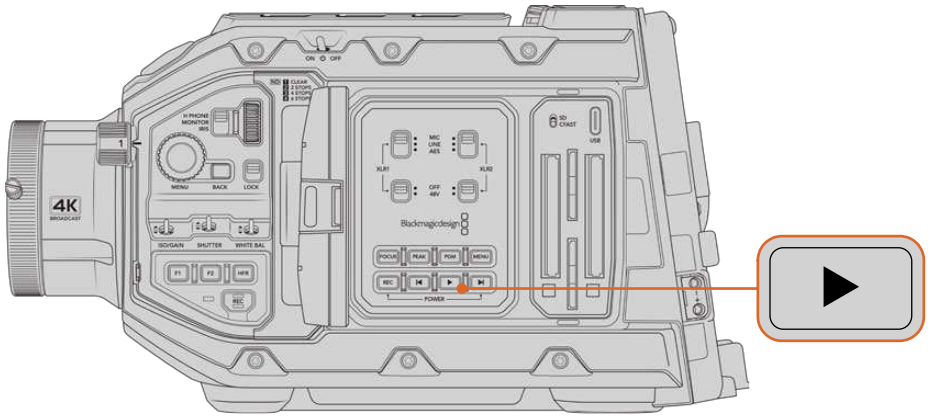

URSA Broadcast G2

NOTE You can also play back your clips using your camera's media pool and sync them to a Blackmagic Cloud project. For more information about the media pool, refer to the next section of this manual.

The controls of your camera work just like a CD player, so pressing the 'forward skip' button will skip to the start of the next clip. Press the 'reverse skip' button once to go to the start of the current clip or press twice to skip back to the start of the previous clip. Hold the 'forward' or 'reverse skip' button to play or reverse at 2x speed. Once shuttling forward or backwards, press the 'fast forward' or 'reverse skip' buttons twice for 4x, three times for x8 and four times for x16. You can also use the forward and reverse skip buttons to open or close the iris on compatible lenses while recording clips.

When recording a clip using a sensor frame rate that differs from your project frame rate, your clip's playback speed will also differ. For example, imagine you have set your camera's project frame rate to match your post production timeline of 24 frames per second. If you record a clip with your sensor frame rate set to 60 frames per second, your clips will play back in slow motion on both the camera and on your post production timeline. Refer to the 'recording' section of this manual for more information about frame rates.

Media Pool

Your Blackmagic URSA Broadcast G2 features a media pool that lets you play back, search and sort your recorded clips using a browser interface. You can also delete clips and sync clips to Blackmagic Cloud via the Internet. For example, uploading clips to DaVinci Resolve projects or directly to your own private Blackmagic Cloud storage.

To open the media pool, tap one of the storage indicators at the bottom of your camera's touchscreen display.

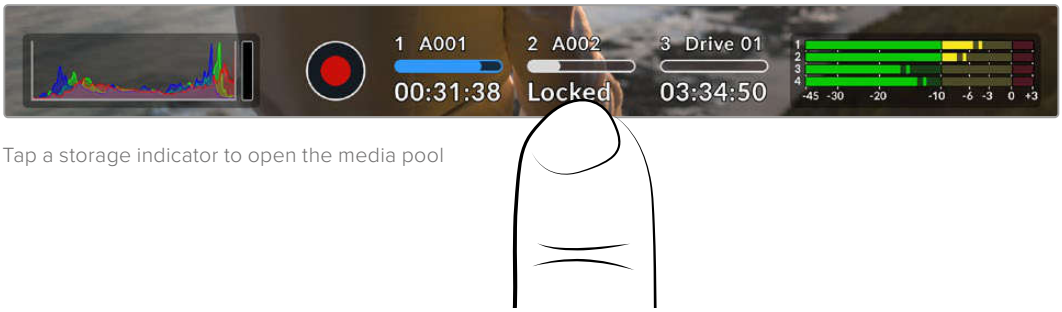

Tap a storage indicator to open the media pool

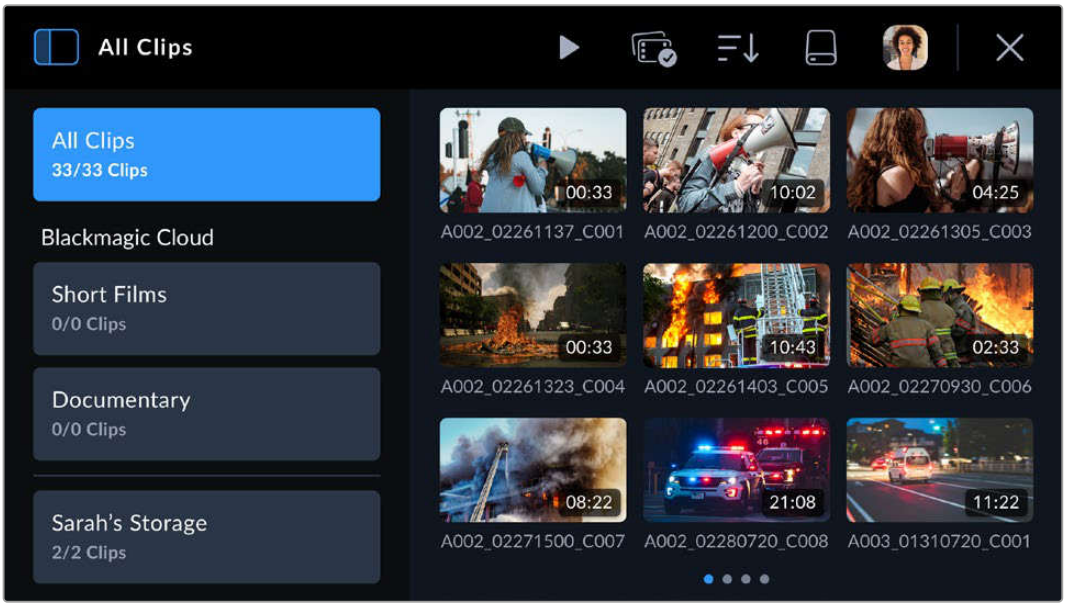

The browser is the main page of the media pool

The main page browser displays thumbnails of all the recorded clips on all media connected to your camera. For example, CFast cards, SD cards and external flash disks via USB. There are three rows of thumbnails and as more clips are added, you can swipe to the next page of thumbnails using the touchscreen. Page indicators at the bottom of the display show how many pages of clips are available.

Sidebar

The sidebar icon at the top left corner opens or closes the media pool side bar. Here, you can select which Blackmagic Cloud projects you want to upload clips to, or to upload clips directly to your personal Blackmagic Cloud storage. More information about uploading clips to Blackmagic Cloud projects and storage is provided later in this section.

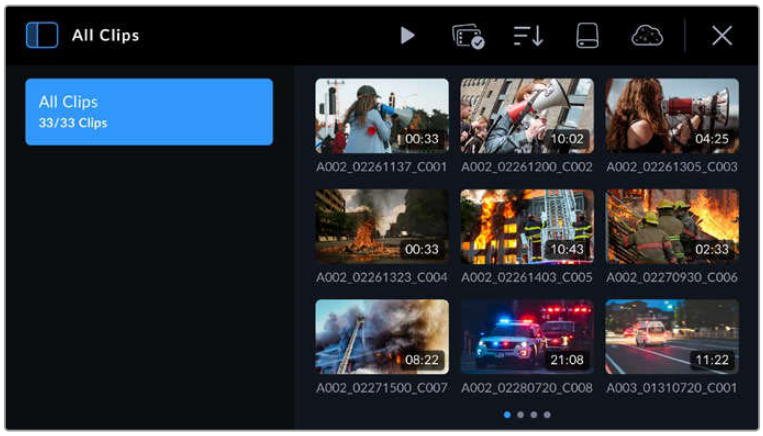

Tap the sidebar icon to open or close the media pool sidebar

Controls

The control menu icons in the browser page of the media pool

The control menu icons at the top of the media pool browser page feature playback, group selection, media filter, media storage and Blackmagic Cloud log in status. When you select a single clip, multiple clips or a filtered clip list the control menu icons will change to display the relevant control options.

The next section describes how to use each control.

Playback

The playback control lets you play back clips recorded on your camera's media storage. You can play back a single clip, a sequence of selected clips, a list of clips filtered by a particular parameter or even play back all the clips on your connected media in one complete sequence.

Playing a Single Clip

Tap on a clip's thumbnail to enter the clip viewer. This displays the clip thumbnail larger on the LCD, lists the clip's file name and provides playback, upload, priority tagging, clip info and deletion controls. Swiping left and right on your camera's touchscreen lets you select a different clip.

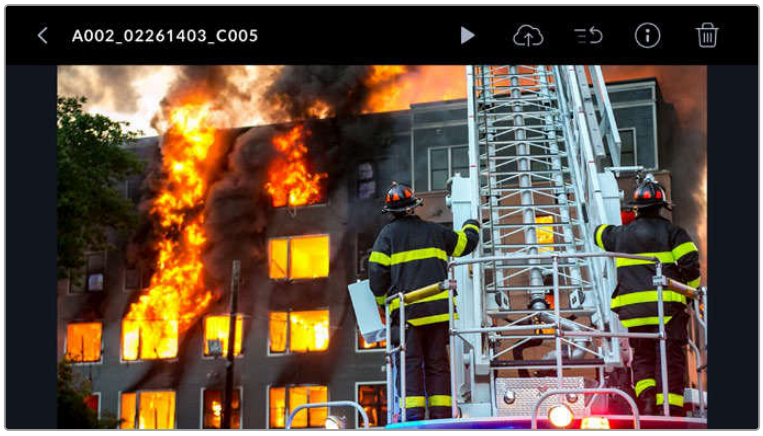

If you want to view the clip's metadata, tap on the information icon. This opens metadata that you can scroll through by dragging up and down. The heart icon lets you add a 'good take' tag to the clip's metadata, similar to marking a good take using your camera's slate feature.

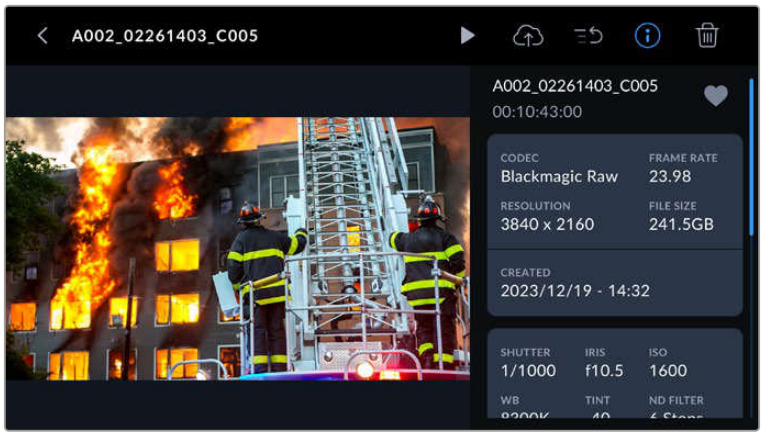

Tap the 'play' icon to play your chosen clip.

When your clip begins playing, you can then use the transport touch controls to scroll the play head backwards and forwards, skip to a different clip, or press 'stop' to return the LCD to the live recording view.

Above the clip name, the clip indicator lets you know the current clip number from the total clips that are cued. For example, clip number one from a total of fourteen clips recorded. If you have any media filters set, the total number of clips will reflect that. The bracketed number represents the total number of clips recorded on all media cards and external disks connected to your camera.

To return to the browser, tap on the 'back' arrow ahead of the clip name.

Playing All Clips

Tapping the play icon in the controls menu when in the browser will construct a timeline of all playable clips. The last clip recorded will be cued first so you can check it, or you can play through the entire timeline. If all of the clips in the browser were recorded using the same format and frame rate then everything recorded will play.

Playing a Sequence of Clips

To play back a sequence of clips, tap on the group select icon in the browser. With this icon enabled, tap on a clip. A small 'play' icon will appear in the top right hand corner of all the clips that share the same format and are available to play back together. You can now selectively tap on the clips you want to play back in a sequence.

Tap the 'play' icon, your camera will now play the sequence of clips and stop when the sequence ends.

Group Select

Tap on the group select icon to select a sequence of clips to play back, or to choose clips to upload to a Blackmagic Cloud project or storage. You can also select a group of clips to delete.

Media Filter

Tap on the media filter icon in the media library to open the filter editor. Here, you can tell your camera how to arrange the clips by preference. For example, you can choose to display clips from a specific media drive, or select 'upload status' as a quick way of checking which clips have been uploaded to Blackmagic Cloud. Use the filter touchscreen menu to scroll up and down and select the filter options you want. When you have made your selection, tap the clip filter icon again to close the menu.

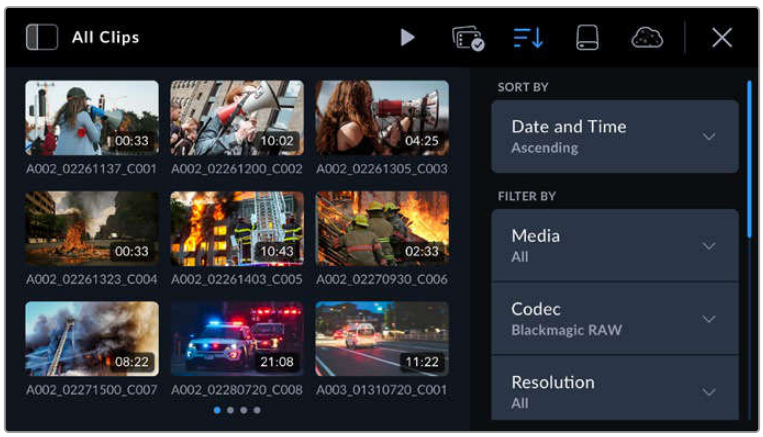

NOTE If you only ever want to play back or review one clip at a time then you can go to the eighth page of your camera's 'setup' menu and select 'single clip' for your playback preference.

Storage

Tap the media storage icon in the media library to enter the storage format page. This page lets you format CFast cards, SD cards and any flash disks and SSDs connected to your camera. For information on how to format media, refer to the 'storage media' section earlier in this manual.

Uploading Clips to Blackmagic Cloud

Blackmagic Cloud is a collaboration platform that lets you work together as a team and share DaVinci Resolve projects worldwide.

When you sign into Blackmagic Cloud on your URSA Broadcast G2 you can choose to upload clips directly to a DaVinci Resolve Cloud project or to manually select the clips you want to upload from your camera's media pool. Alternatively clips can also be uploaded straight to your own private Blackmagic Cloud storage directly without syncing to a Resolve Cloud project.

You can choose to upload proxy files or both proxy and original files in your camera's setup settings on page 2 of the setup menu. Refer to the 'setup settings' section for more information.

Logging into Blackmagic Cloud

Before logging into Blackmagic Cloud on your URSA Broadcast G2, you will need to connect your camera to the Internet.

Connect an Ethernet to USB-C adapter or your smartphone to your URSA Broadcast G2's USB-C port. When connecting using your smartphone, enable your phone's tethering or hotspot feature. Once connected to the Internet, the Blackmagic Cloud icon at the top of your camera's touchscreen will turn blue.

To log into your Blackmagic Cloud account:

1 Tap the Blackmagic Cloud icon in the controls menu.

2 Use your smartphone's camera to scan the QR code on your URSA Broadcast G2's touchscreen and follow the prompts on your phone to sign your camera into your Blackmagic Cloud account. Alternatively, you can visit the web address displayed on your camera's touchscreen display and enter the eight digit code.

To enter your login details manually, tap 'manual login' and use the touchscreen keyboard to enter your email address and password.

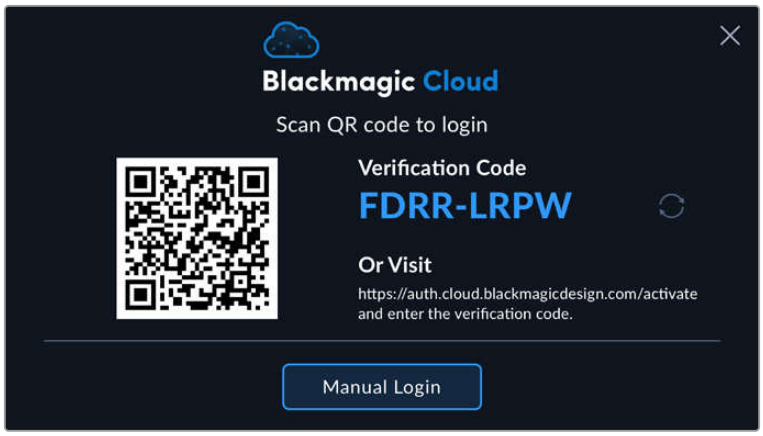

Once logged in, your Blackmagic Cloud avatar will be displayed in the controls menu. You can tap your avatar to view your account details or to log out of your account.

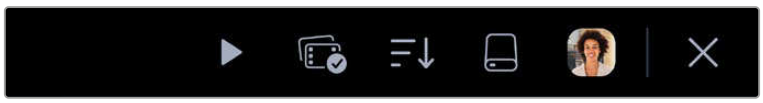

Your account avatar is displayed in the controls menu

Allowing Remote Camera Access in DaVinci Resolve

You can upload clips to both new and existing Blackmagic Cloud projects from your URSA Broadcast G2 by allowing remote camera access in DaVinci Resolve's settings. Once remote access has been enabled for a project, it will appear in your camera's Blackmagic Cloud projects panel.

Allowing access to a new project:

1. Open DaVinci Resolve. In the 'project manager' window, select the 'cloud' tab and enter your Blackmagic Cloud login details.
2. Select a Blackmagic Cloud project library from the project library list and click 'new project'.
3. With the new project window open, enter the project details. Enable 'allow remote camera access' in the new cloud project window.

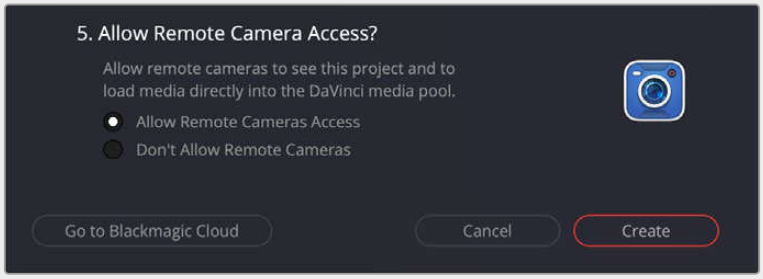

If you want to upload clips to an existing DaVinci Resolve Cloud project, open the project settings and select 'Blackmagic Cloud'. Enable the 'allow remote cameras to see this project to load media directly into the media pool' option in the 'remote cameras' settings.

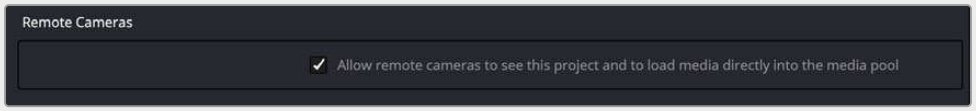

The Blackmagic Cloud project will appear in your Blackmagic URSA Broadcast G2's media pool sidebar when your camera is connected to the internet and signed into your Blackmagic Cloud account.

For more information about DaVinci Resolve Cloud projects, refer to the DaVinci Resolve user manual. You can download the manual at www.blackmagicdesign.com/support/family/davinci-resolve-and-fusion

Blackmagic Cloud Projects Panel

Tap the sidebar icon at the top left of the touchscreen to open the Blackmagic Cloud projects panel.

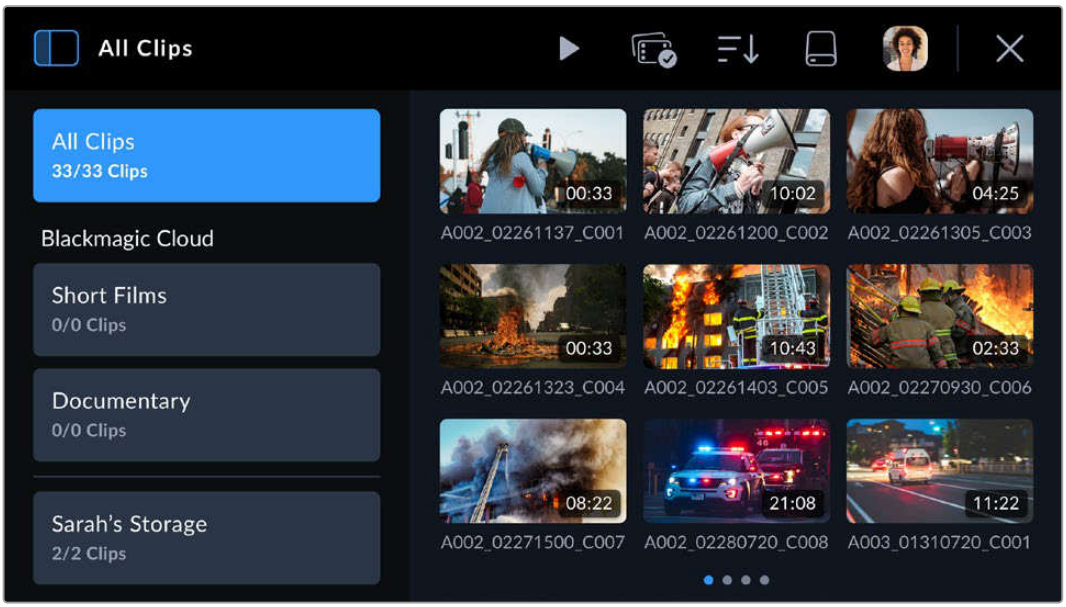

When you are signed into your Blackmagic Cloud account, projects that you can upload clips to are listed in the 'Blackmagic Cloud' section of the viewer.

Uploading Clips to a Blackmagic Cloud Project

Selecting a Blackmagic Cloud project lets you upload proxy files, or both proxies and originals, as you record clips to your camera's media. When a project is selected in the projects panel, a clip will be immediately uploaded as soon as you stop recording on your camera. This will happen in the background as you continue recording clips for as long as your camera is connected to the Internet and logged into your Blackmagic Cloud account.

To upload to a Blackmagic Cloud project:

1 Tap on a Blackmagic Cloud Project to select it.

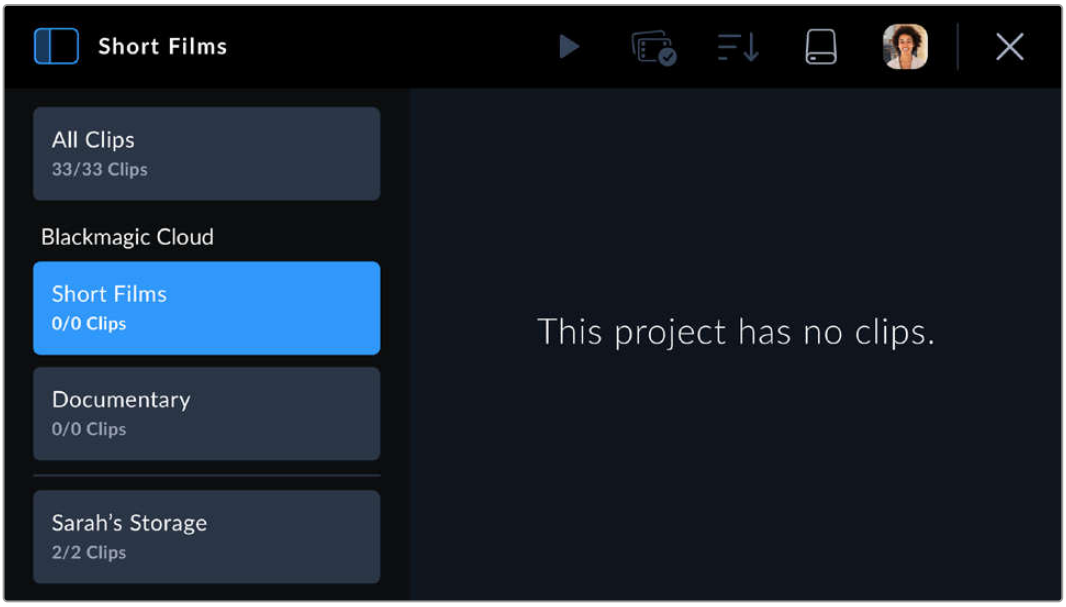

2 Tap the ‘x’ at the top right of your camera’s touchscreen or press the camera’s ‘record’ button to close the media pool and return to the HUD.

3 The name of the selected Blackmagic Cloud project will appear above the timecode display on your camera’s HUD. The next time you record a clip, your camera will automatically start uploading media to the selected cloud project.

If your camera’s internet connection is interrupted, the name of the cloud project will be grayed out and uploads paused. Your camera will automatically restart the uploading process when the internet connection is restored.

When you have finished recording, tap on your camera’s storage indicator to open the media pool and view the upload status of your clips.

Your Blackmagic Cloud avatar will remain visible in the controls menu and you will stay logged in even if you have disconnected your phone or Ethernet adapter. This ensures that any recordings you have in your project upload queue will resume as soon as possible after plugging in your phone or network again. Your camera will immediately try to reestablish your internet connection and resume any uploads it has in its queue.

This also means when you choose to record directly into a project, you can operate in areas with patchy cellular coverage and not worry about reconnecting to upload as the process happens automatically. For example, you could record clips in locations where there is no Internet connection or cellular signal at all and then simply plug in when you are in range or have a wired Internet connection and quickly upload your proxies then.

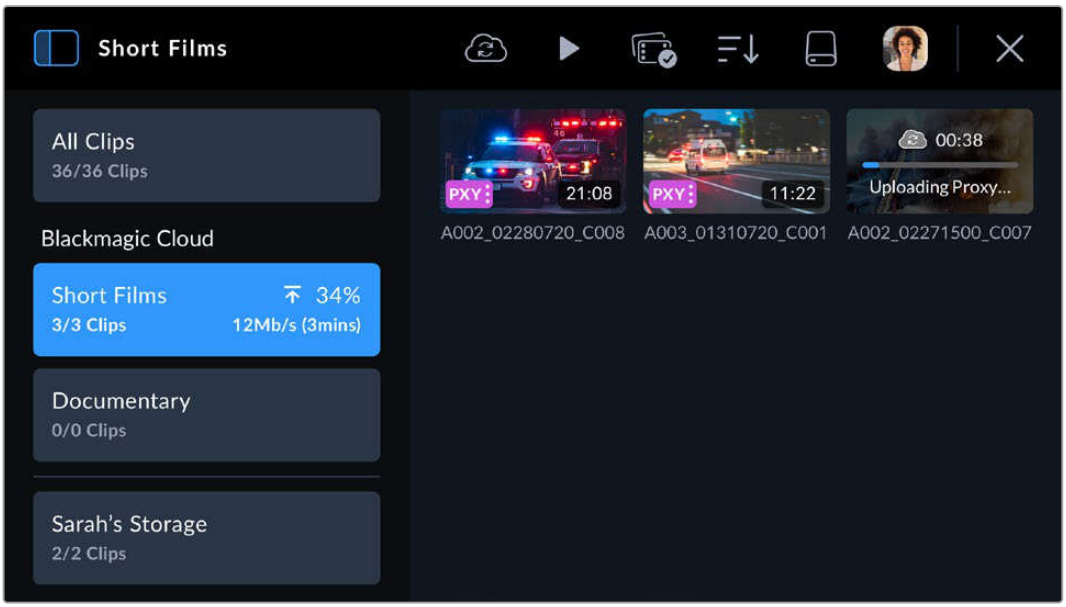

TIP For information on how to set your camera to upload proxy files or both proxy and original files, refer to the ‘settings’ section.

Selectively Uploading Clips to Projects

If you prefer, you can choose not to upload to a project until after your shoot and then upload a single clip to a project, more than one project, or even your private storage all at once. You can also use the group select tool to select multiple clips to upload at once to one or many locations.

To upload recorded clips to a Blackmagic Cloud project:

1 Log in to your Blackmagic Cloud account.

2 Tap the sidebar icon and select 'all clips'.

3 Tap the 'group select' icon in the controls menu and select the clips that you want to upload.

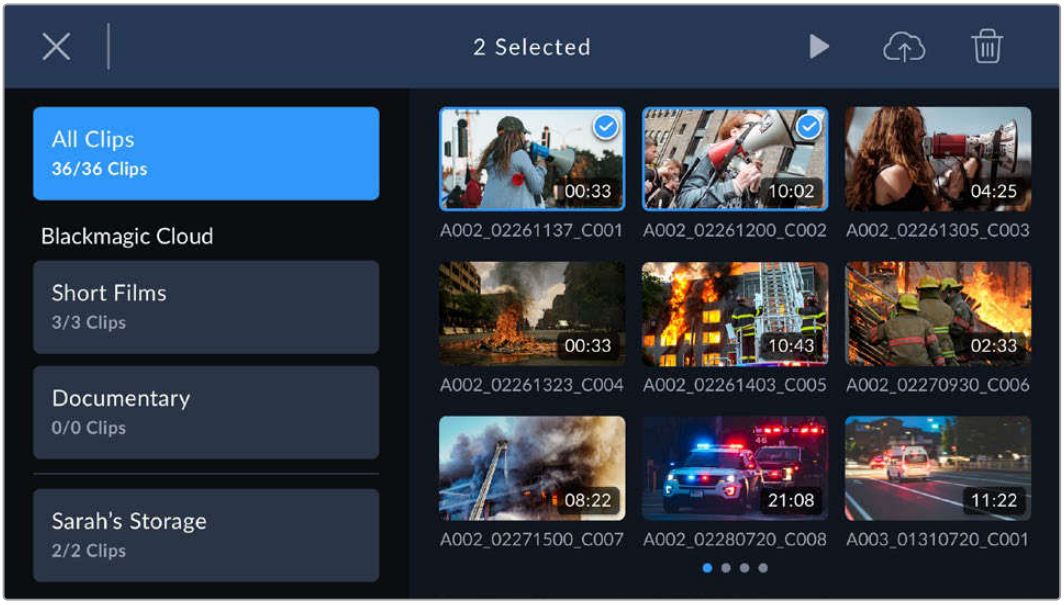

4 Tap the 'cloud upload' icon. Select the Blackmagic Cloud projects that you want to upload your clips to by tapping the project names.

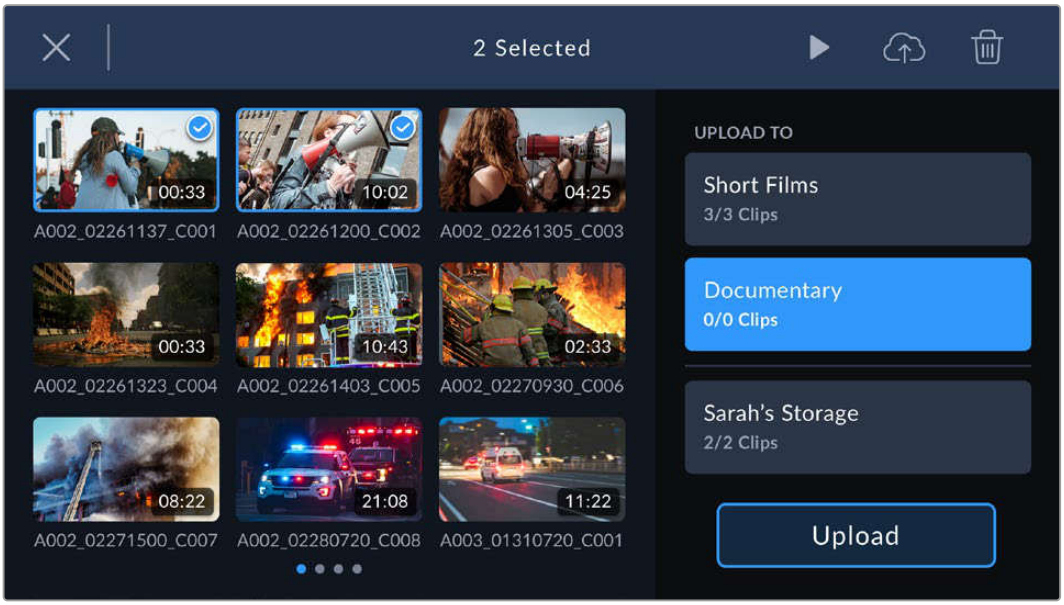

5 Tap 'upload'.

Upload Original

When uploading clips to Blackmagic Cloud projects with 'proxies only' selected in your camera's 'setup' settings, you can still choose to upload an original clip using the clip's metadata viewer. For example, this can be helpful when you are shooting using 6K Blackmagic RAW with low compression as the files can get very large. To save cellular upload data you may choose to upload proxies only and then upload specific original clips later as required.

To upload an original clip:

1 Select the Blackmagic Cloud project from the projects panel and tap the clip to open it in the playback viewer.

2 Tap the 'information' icon in the controls menu to display the clip's metadata.

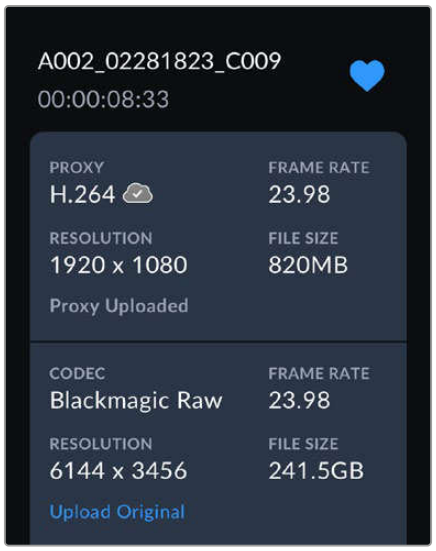

3 In the metadata window, scroll to the section that displays metadata information for your clip's original file. Tap the 'upload original' button.

Uploading to Your Blackmagic Cloud Storage

You can also choose to upload clips directly to your own private Blackmagic Cloud storage. This can be useful if you want to upload and back up clips but not into a specific DaVinci Resolve project. Access your cloud storage by logging into your Blackmagic Cloud account on your computer and selecting 'cloud storage' from the menu.

To upload clips to your Blackmagic Cloud storage:

1 Tap the sidebar icon at the top left of the Blackmagic Cloud project panel.

2 Scroll to the bottom of the project list and select your cloud storage, this will be named with your Blackmagic Cloud user name, followed by 'storage'.

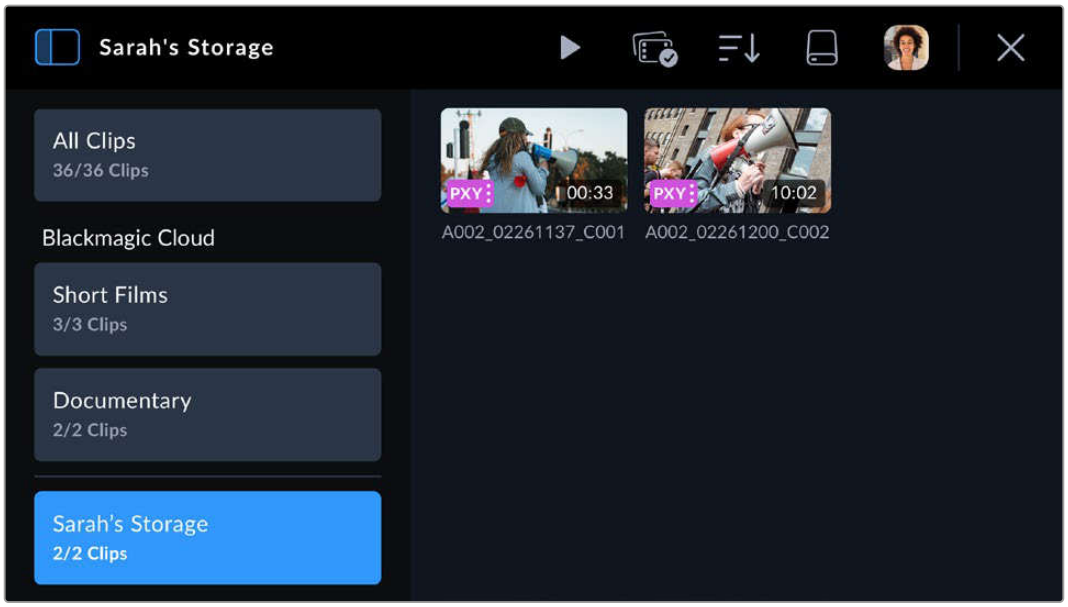

3 Tap your private Blackmagic Cloud storage to select it.

Clip Upload Status Indicators

When you have chosen to upload clips to a Blackmagic Cloud project, you can check the upload status by selecting the project from the Blackmagic Cloud projects panel.

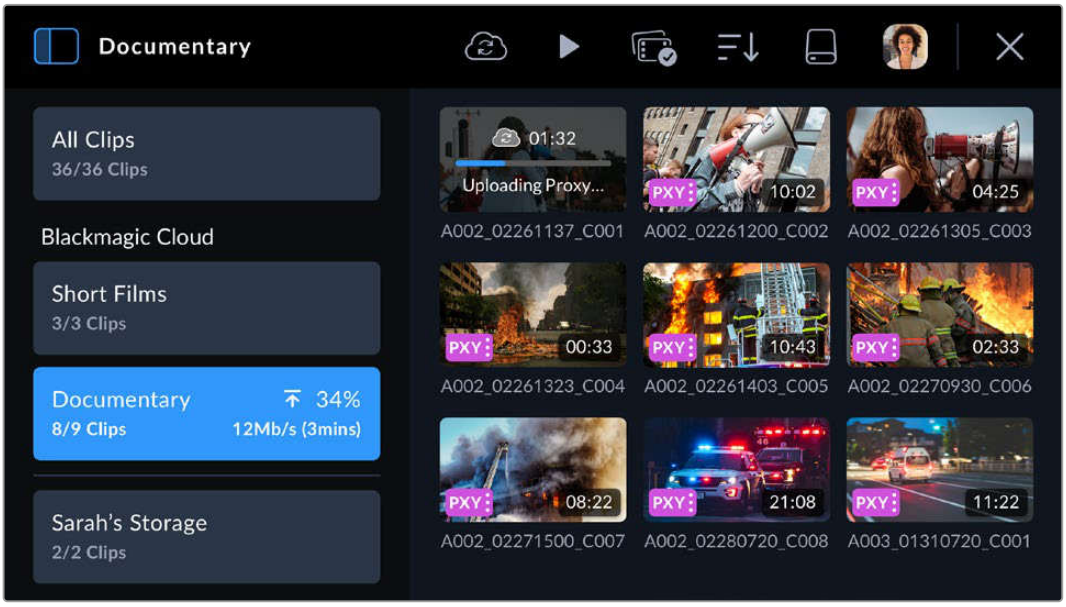

Next to the cloud project name the overall upload status is displayed including number of clips, completed percentage, upload speed and estimated time remaining.

The upload status for each clip is displayed on the clip thumbnail:

PXY	Displayed when the clip's proxy file has been successfully uploaded.
PXY HQ	Displayed when both the proxy and original files have been uploaded.

Closing the Media Pool

When you have finished using the medial pool and want to return to the live recording view on your camera's LCD, tap the 'X' icon at the top right corner of the menu controls.

URSA Broadcast G2 Connectors and Features

Industry standard BNC connectors are located on the right and rear panel of your URSA Broadcast G2 for SDI connections. There is also a LANC input on the right panel for the optional Blackmagic URSA Handgrip.

XLR inputs are on the top panel behind the mounting points for professional balanced analog audio and AES digital audio. A 4 pin XLR connector is provided on the rear panel for external power input, and an output is available on the right side for powering accessories such as Blackmagic URSA Viewfinder.

The USB port above the storage media slots is for connecting to a computer when updating your camera's internal software.

NOTE Your camera has additional ergonomic controls that make it easy to quickly access the camera's essential settings and functions without opening the foldout touchscreen.

Camera Front

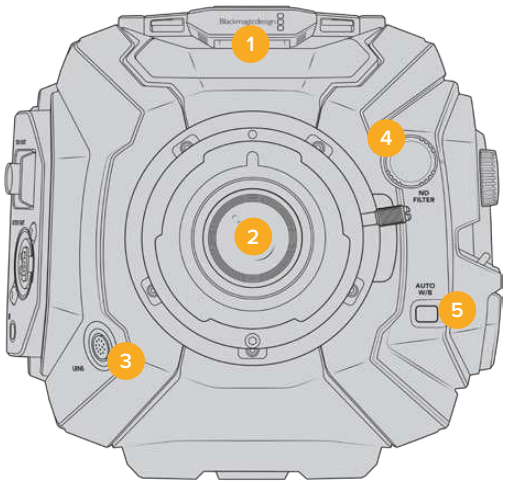

URSA Broadcast G2 with B4 mount

1 **Stereo Microphone**
Built in high quality stereo microphone. Refer to the 'settings' section for information on microphone audio settings.

2 **Lens Mount**
URSA Broadcast G2 is supplied fitted with a B4 mount. However, it's interchangeable with the included EF mount and compatible with URSA Mini Pro PL and F mounts. Refer to the 'Interchangeable lens mount' section for more information.

3 **Broadcast Lens Connector**
This 12 pin connector provides power and control to compatible broadcast servo zoom lenses. Refer to the 'using servo zoom lenses' section in this manual for details on functionality available with these B4 and PL lenses.

4 ND Filters

Use this wheel to cycle through three built in neutral density filters, as well as a clear setting. See the section 'URSA Broadcast G2 Controls' for more information.

5 Auto White Balance

The auto white balance button is marked 'Auto W/B' and is used when you want to set the white balance based on what is currently in the center of the screen. For example, setting auto white balance on a gray card placed in front of the lens. See the section 'URSA Broadcast G2 Controls' for more information.

Left Side

URSA Broadcast G2's left side panel lets you insert CFast 2.0 cards, SDXC or SDHC cards, access the control panel and change settings. The USB-C port is located just above the CFast slots so you can easily plug into a computer when updating your URSA Broadcast G2's internal software.

Left Side Controls

The left side panel features additional controls for easy access to all of your camera's essential functions. These controls are split between the forward control panel, the ergonomic control panel located on the outside of the foldout touchscreen monitor, and a control panel on the inside of the foldout monitor.

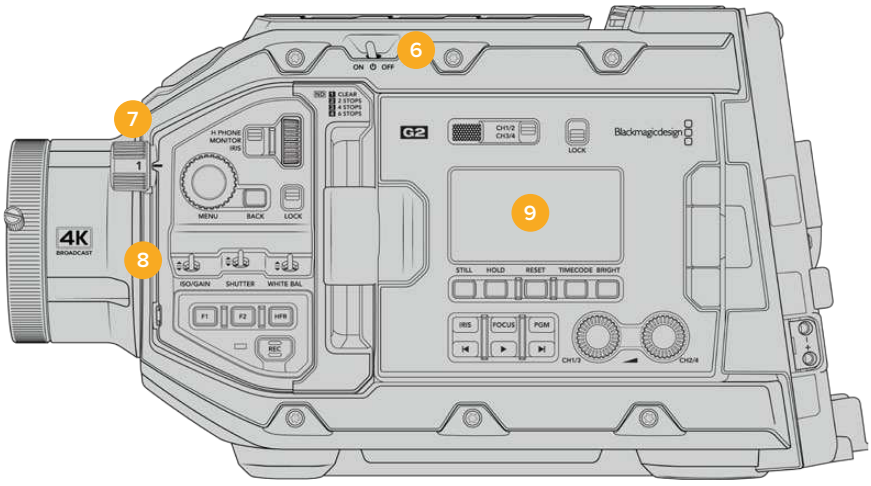

URSA Broadcast G2 with touchscreen closed

6 Power Switch

Power switch for turning on the camera. There is also a backup power switch inside the fold out monitor that allows the camera to be powered on by pressing both the record and forward skip buttons at the same time.

7 ND Filters

Your URSA Broadcast G2 has three internal neutral density filters to adjust the amount of light reaching the sensor. Four settings are available, ranging from clear to six stops of light reduction. Simply turn this wheel to move through the available settings. The filter will click into place for each setting. For more information see the section 'URSA Broadcast G2 Controls' in this manual.

8 Forward Control Panel

The forward control panel provides quick access to all of your URSA Broadcast G2's essential functions. These controls are located for easy access when shooting on a tripod or on the shoulder, and you can use them to adjust settings such as ISO, shutter speed, iris, white balance, frame rate, and more. See the section 'URSA Broadcast G2 Controls' for more information.

9 Ergonomic Control Panel

On the outside of your URSA Broadcast G2's foldout touchscreen monitor, you'll find an LCD status monitor and a variety of controls for fast, powerful monitoring control. Here you can see all of your camera's status information at a glance, as well as controlling a variety of powerful monitoring functions. See the section 'URSA Broadcast G2 Controls' for more information.

10 Storage Media Selection Switch

Use this switch to choose between CFast and SD storage media.

11 USB Port

USB-C port for updating internal software. See the section 'Blackmagic Camera Setup Utility' for more information.

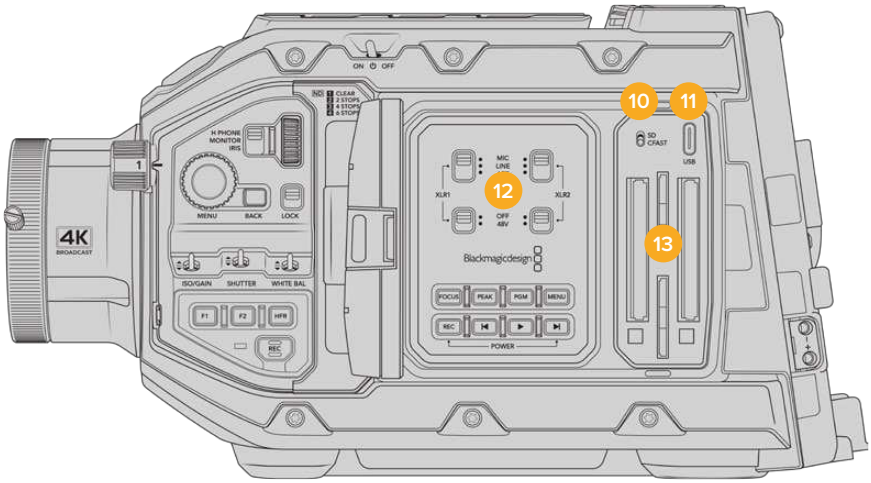

URSA Broadcast G2 with touchscreen open

12 Internal Control Panel

When your URSA Broadcast G2's foldout monitor is open, you have access to the internal control panel. Use the controls here to set your audio inputs as well as phantom power settings. You can also access iris, focus, menu and playback controls and more. See the section 'URSA Broadcast G2 Controls' for more information.

13 Memory Card Slots

Insert CFast 2.0 cards, SDXC or SDHC cards for record and playback. Please note that you should check the list of certified cards on our website. See the section 'storage media' for more information.

Right Side

URSA Broadcast G2's right side panel gives you access to all the video, audio and power connectors plus the side handle rosette mount.

14 Side Rosette Mount

Standard rosette mount for the side handle. Refer to the 'Getting Started' and 'Blackmagic URSA Mini Shoulder Kit' sections.

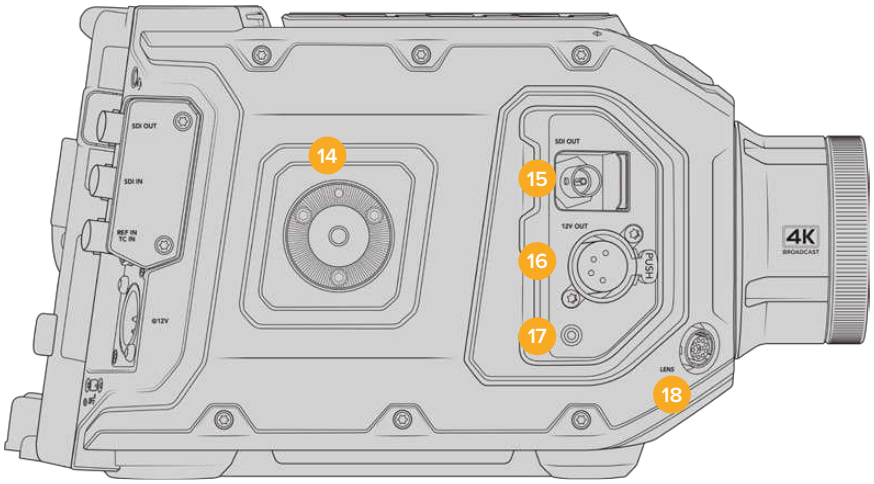

URSA Broadcast G2 has a rosette mount built into the right side if you need to attach an optional URSA Mini side handle

15 HD Monitoring Output

3G-SDI connector for down converted 1080HD output. Use with Blackmagic URSA Viewfinder or external monitors. Refer to the 'camera video output' and 'Blackmagic URSA Viewfinder' sections for more information.

16 +12V Power Output

4 pin XLR connector for powering Blackmagic URSA Viewfinder, Blackmagic URSA Studio Viewfinder or external monitors and accessories. Refer to the 'Blackmagic URSA Viewfinder' and 'Blackmagic URSA Studio Viewfinder' sections for more information. This output combined with the Broadcast Lens Connector supplies 12 Volts at up to 2 Amps in total.

17 LANC Input

Dedicated 2.5mm TRS LANC connector for Blackmagic URSA Handgrip.

18 Broadcast Lens Control Connector

Provides power and control to compatible PL and B4 mount lenses with 12 pin connections. This output combined with the +12V Power Output supplies 12 Volts at up to 2 Amps in total.

Rear Panel

19 Battery Mount Plate

Your Blackmagic URSA Broadcast G2 comes fitted with Blackmagic URSA VLock Battery Plate for attaching VLock batteries to your camera. URSA VLock Battery Plate features a D-Tap port for powering accessories. The D-tap port can output a regulated 12 Volts at up to 1.5 Amps.

URSA VLock Battery Plate can be replaced with an optional Blackmagic URSA Gold Battery Plate or a third party battery plate. The battery plate can be removed to access a recessed Molex connector and to attach optional accessories such as Blackmagic Camera Fiber Converter or Blackmagic URSA Mini Recorder onto the back of the camera. If your connected accessory has a D-tap power output then the Molex connector will supply a pass through output of 12 Volts at up to 1.5 Amps. For more information, refer to the chapter for 'Mounting Batteries', 'Getting Started with Blackmagic Fiber Converters' and 'URSA Mini Recorder'.

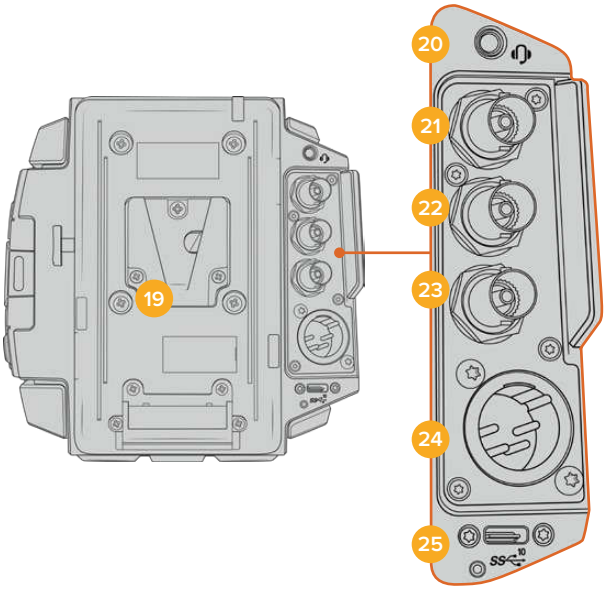

20 Headphone/Headset

The 3.5mm jack output is used for headphone monitoring and talkback. You can plug in iPhone and Android compatible headsets that have a built in microphone for quick and easy talkback. Talkback audio is embedded in channels 15 and 16 of the SDI output.

TIP When using URSA Broadcast G2's 3.5mm jack for talkback, a very affordable option is using an iPhone or Android compatible headset. These typically feature an inline button that can be used to mute and unmute their microphone. If you would like to use a broadcast headset without this inline switch you can configure your URSA Broadcast G2's function buttons to offer the same functionality. See the 'setup settings' section of this manual for more information.

21 12G-SDI Out

Blackmagic URSA Broadcast G2's 12G-SDI output is used to send HD and Ultra HD video to SDI equipment such as routers, monitors, SDI capture devices, and broadcast switchers. You can also connect the 12G-SDI output to an external recorder such as the Blackmagic Video Assist for backup recording.

22 12G-SDI In

The 12G-SDI input is used for connecting to a switcher or external recorder. This means if you're using URSA Broadcast G2 in a live broadcast, you can plug in the switcher's program output and monitor it during the shoot, or check playback from an external recorder. Press and hold the program button to see your program feed.

For more information, refer to the 'Ergonomic Control Panel' section in this manual.

You can also use an ATEM switcher's 'camera control' feature to remotely adjust many URSA Broadcast G2 functions. See the section 'Understanding Studio Camera Control' for more information. Blackmagic 3G-SDI Shield for Arduino can also be used to provide custom control of the camera over SDI.

To receive tally and talkback via the SDI input, make sure you have set your ATEM Camera ID in the camera's setup menu. If you want to use the SDI input to receive an external reference signal, you will need to select 'program' as your reference source in the setup settings. 'REF' will appear next to the timecode display on your camera's LCD screen when the external reference is locked. Refer to the 'setup settings' in the manual for more information.

On URSA Broadcast G2 the SDI Input can be used for feeding external timecode to the camera as well. This will lock to the incoming timecode automatically if the frame rate of the incoming SDI signal matches and has valid timecode. The 'EXT' logo will appear on URSA Broadcast G2's LCD when external timecode is locked. If you unplug the cable timecode will remain jammed and the logo will switch to 'INT' to let you know it is now running from URSA Broadcast G2's internal timecode clock.

23 Reference and Timecode In

This input automatically recognizes and switches between timecode and reference input signals. Synchronize Blackmagic URSA Broadcast G2 to a common reference signal, such as tri-level sync, by connecting to the 'reference' BNC input marked 'REF In'. It's worth noting that to use a reference signal through this input, you must set your reference source to 'external' in your URSA Broadcast G2's setup menu.

Alternatively you can use this connector to match an external timecode source to sync up multiple cameras, or audio and picture when shooting dual-system. This ensures audio and picture, or video from multiple cameras, can be easily synchronized during post production. When external timecode with a matching frame rate is plugged into this connector the camera will lock to the incoming timecode automatically. The 'EXT' logo will appear on URSA Broadcast G2's LCD when external timecode is locked. If you unplug the cable, timecode will remain jammed and the logo will switch to 'INT' to let you know it is now running from URSA Broadcast G2's internal timecode clock.

You can also set your camera to use the reference signal from an ATEM switcher via the Program SDI Input. This is helpful when working with ATEM switchers because all cameras can receive program return, camera control and be referenced together using a single SDI signal. See the 'setup settings' section in this manual for more information.

24 12V+ Power Input

Use the 4 pin 12-18 Volt DC XLR connector to plug in power from external sources such as the supplied power adapter, or portable batteries.

25 USB Port

USB-C 3.2 Gen 2x1 port for recording to an external flash disk or to an SSD using Blackmagic URSA Mini Recorder. Also used for connecting Blackmagic Zoom and Focus Demand to your camera for focus and zoom control with compatible lenses.

The threaded connector under the USB-C port works with the locking USB cable supplied with URSA Mini Recorder to maintain a secure connection during use. For more information refer to the 'URSA Mini Recorder' section in this manual.

Top Panel

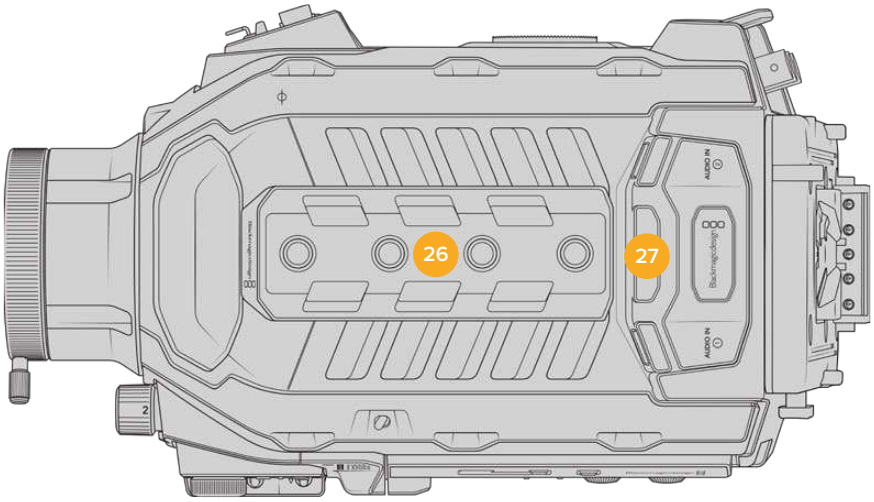

External analog audio can be plugged into the balanced XLR connectors on the top panel

26 1/4 Inch Mounting Points

Your camera's top panel contains 4 strong mounting points for attaching the top handle and accessories.

27 XLR Audio In

Use the balanced XLR inputs to plug in external analog audio from professional equipment such as audio mixers, PA systems or external microphones. The XLR connectors supply 48V phantom power so you can use microphones that aren't self powered. Refer to the 'URSA Broadcast G2 controls/internal control panel' section for more information on phantom power.

Underside

28 1/4 Inch Mounting Points

The 5 mounting points on the underside are used for attaching tripod heads, the URSA Mini Shoulder Kit and other accessories.

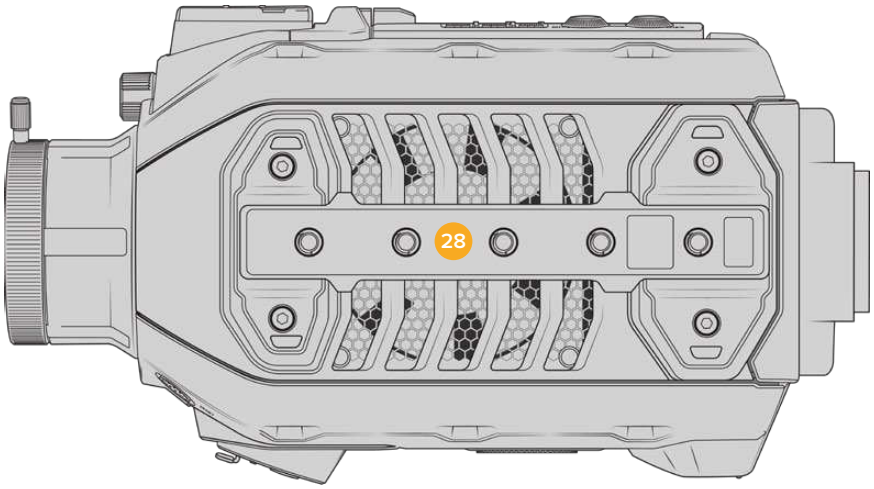

URSA Broadcast G2 Controls

Blackmagic URSA Broadcast G2 has control panels on the chassis, outside and inside of the foldout touchscreen monitor to give you quick, easy access to all of its essential functions as well as powerful monitoring tools. These panels are designed to be close to hand whether shooting from a tripod, handheld or with the URSA Mini Shoulder Kit.

Forward Control Panel

Your camera's forward control panel groups together all of the controls you might need to adjust when setting up a shot and recording. These are all designed for easy access while shooting with the foldout monitor closed, such as when using the shoulder kit.

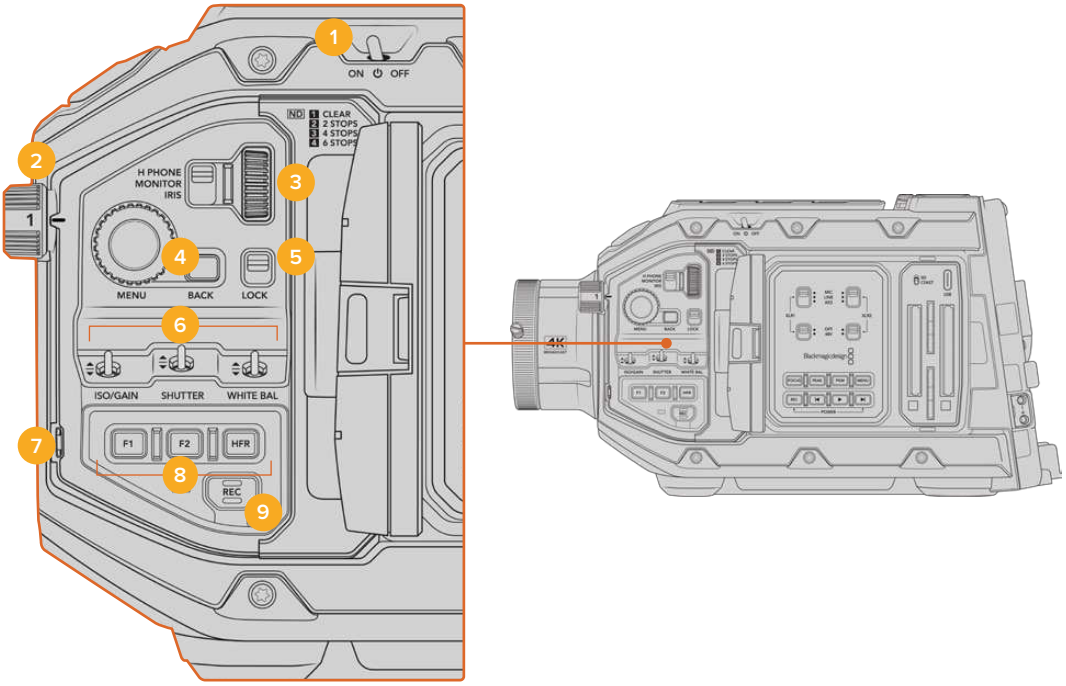

URSA Broadcast G2 forward control panel

1 Power Switch

Power your URSA Broadcast G2 by moving this switch to the 'on' position. Power off by moving the switch to the 'off' position.

> **TIP** You can also power your URSA Broadcast G2 on or off via a combination of control panel switches. Holding the 'rec' and 'forward skip' buttons will power up the camera if it is turned off, or power it off if it is turned on. If your camera's power switch is set to 'on' but your camera is powered down, it may have been powered down via the control panel. Toggle the power switch to return it to normal operation.

2 ND Filters

Your URSA Broadcast G2 has three internal neutral density filters. Together with a clear filter, the available settings are 1/4, 1/16th and 1/64th. These filters allow you to reduce the amount of light reaching your URSA Broadcast G2's sensor by a preset fraction. By reducing the exposure, you can continue shooting at wide apertures in bright conditions such as outdoors on sunny days.

To adjust your neutral density setting, rotate the wheel upwards or downwards. The 'clear' setting means there is no ND filter being used. From settings 1/4 to 1/64th, the ND filters gradually increase in density so you can decrease light if you need to.

Because different people prefer to use different terms for each ND filter, the measurement of your ND settings can be customized in the LCD menu. You can identify the ND filter number, amount of stops in light reduction, or the fraction representing the amount of light reduced for the filters to suit your preference.

Neutral Density Filter Settings

Wheel position	ND number	Stops	Fraction
1	clear	0	1
2	0.6	2	1/4
3	1.2	4	1/16
4	1.8	6	1/64

3 **Settings Wheel**

Set this wheel's function by adjusting the adjacent three position switch next to the wheel. The options are 'headphone,' 'monitor' and 'iris'.

Headphone

When set to 'headphone', the settings wheel will adjust headphone audio levels. Rotate the wheel upwards to increase volume, and downwards to decrease.

Monitor

When set to 'monitor', the settings wheel adjusts audio levels on your camera's built in monitor speaker. The speaker is located on the outside of the LCD monitor door and can be used to monitor audio without headphones. Rotate the wheel upwards to increase volume, and downwards to decrease. This function is disabled while recording from the camera's internal microphone to prevent unwanted feedback.

Iris

When set to 'iris', the settings wheel is used to adjust the aperture of compatible lenses mounted to your URSA Broadcast G2. Rotating the wheel downwards opens the iris, and turning the wheel upwards closes the iris. These directions mimic the operation of aperture on adjustable still and cinema lenses.

TIP To change aperture settings via the settings wheel, URSA Broadcast G2 must be fitted with a lens that supports changing aperture via the camera. If you are using a B4 or PL lens connected via the broadcast 12 pin connector, make sure that the lens iris switch on the handgrip is set to 'A' or 'auto'.

4 **Menu Wheel and Back Button**

When 'status text' is turned on for your camera's front SDI output, you can use the menu wheel to navigate many of the head up display features usually accessed via the LCD touchscreen.

Simply press the menu wheel as you would a button to access your URSA Broadcast G2's head up display on an external monitor such as Blackmagic SmartView, Video Assist or URSA Viewfinder. While the menu wheel is active, turn the wheel to select features such as LCD monitor options, frame rate, ISO, white balance and tint. Press the wheel to confirm selections and make additional changes, and use the 'back' button next to the wheel to cancel. You can also use the back button to move up a menu level, or exit the menu completely if you're at the top level. The menu will automatically close after one minute of inactivity.

For more information on setting status text and the controls available, see the 'touchscreen controls' and 'monitor settings' sections of this manual.

5 Lock

Toggle this switch to lock all of the controls on the forward control panel to prevent them from being accidentally adjusted while shooting. Move this switch to the lower position to lock, and the upper position to unlock.

TIP When shooting in busy or uncontrolled environments, you can lock your URSA Broadcast G2's forward control panel when you leave your camera unattended. This ensures that your settings are not changed unintentionally by others.

6 ISO, Shutter and White Balance Switches

These small switches are used to adjust your ISO/Gain, white balance, and shutter settings. They are helpful when you want to make fast adjustments without taking your eyes off the shot. Gently push the switches up or down to make setting adjustments. The switches are spring loaded so they always return to a neutral position.

ISO/Gain

Push this switch up or down to adjust your camera's gain setting. Pushing up will increase the setting by 1/3 stop, and pushing down will decrease by 1/3 stop. The available settings range from -12 to 36dB.

Shutter

Use this switch to adjust the camera's shutter speed. Pushing up will increase the shutter speed to the next available preset, and pushing down will decrease to the next available preset. Holding the switch up or down will move more quickly through available values. There are twelve shutter speed presets between 1/24 and 1/2000.

TIP Your URSA Broadcast G2 can also suggest flicker free shutter speeds based on the power frequency in your region. These must be selected through the LCD touchscreen menu. For more information see the 'touchscreen controls' section in this manual.

White Balance

This switch is used to adjust the camera's white balance. Pushing up will increase the color temperature by 50K, and pushing down will decrease it by 50K. Holding the switch up or down will move more quickly through available values.

7 Auto White Balance

Pressing this button will reveal a white 'auto white balance' box in the center of the LCD for five seconds. This box will also appear on any SDI output that has 'status text' enabled in the menu settings. The white box indicates the specific area of your image where the white

balance will be calculated from, so your gray card should be positioned within this box. Pressing and holding the 'Auto W/B' button for three seconds will perform an 'auto white balance', and the square will change from white to green to confirm that this has been performed successfully.

For more information on enabling status text for your URSA Broadcast G2's front or main SDI outputs, see the 'monitor settings' section in this manual.

8 **F1 and F2**

The F1 and F2 keys are 'function' keys that can be programmed to a variety of commonly used functions using your URSA Broadcast G2's 'setup' menu. By default, F1 is set to toggle 'focus zoom' on the LCD and front SDI output, while F2 is set to toggle 'false color' on the LCD.

For more information, see the 'touchscreen controls' section of this manual.

HFR

Use the HFR or high frame rate button to toggle off speed frame rates. To use this button, simply set the off speed frame rate you'd like to use in your URSA Broadcast G2's 'frame rate' menu. Pressing this button will toggle between your chosen off speed frame rate and project frame rate. It's worth mentioning that this setting can only be adjusted when the recording is stopped. The HFR button can also operate as a function button that you can program to a variety of commonly used functions, or can be disabled.

For more information on project and off speed frame rates, see the 'touchscreen controls' section in this manual.

9 **Record**

The 'record' button is marked REC on your Blackmagic URSA Broadcast G2's left side. Press the record button to start and stop recording. Refer to the 'recording' section for more information.

Ergonomic Control Panel

On the outside of your URSA Broadcast G2's touchscreen monitor, you'll find an LCD status monitor and a variety of monitoring controls. This panel lets you see all of your camera's status information at a glance, as well as monitoring and adjusting audio levels. Automatic focus can be set using compatible lenses and the transport controls let you playback clips.

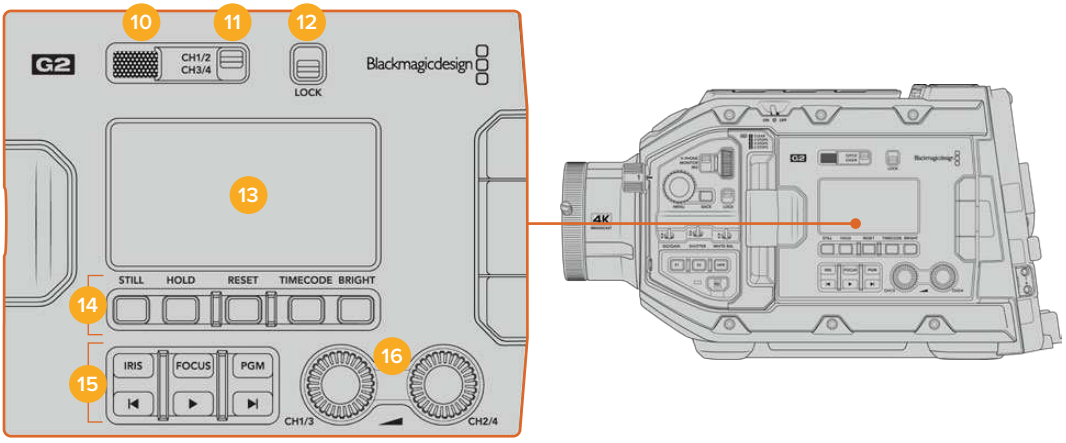

URSA Broadcast G2 ergonomic control panel

10 Monitor Speaker

The small speaker built into the outside control panel lets you monitor audio when in playback. It is located where your ear would normally be when shooting with the camera on your shoulder.

To adjust the volume of the speaker, simply rotate the settings wheel as described in the 'URSA Broadcast G2 Controls' section.

11 Monitor Channel Select

Your URSA Broadcast G2 supports two channels of audio.

12 Lock

Use this switch to lock all of the settings on your URSA Broadcast G2's ergonomic control panel. The only controls that will remain active while the lock switch is 'on' are the monitor channel select switches.

13 Status LCD

This display shows you your URSA Broadcast G2's essential settings at a glance, without needing to open the internal touchscreen. This screen is designed to be visible even in bright daylight. The following information is available:

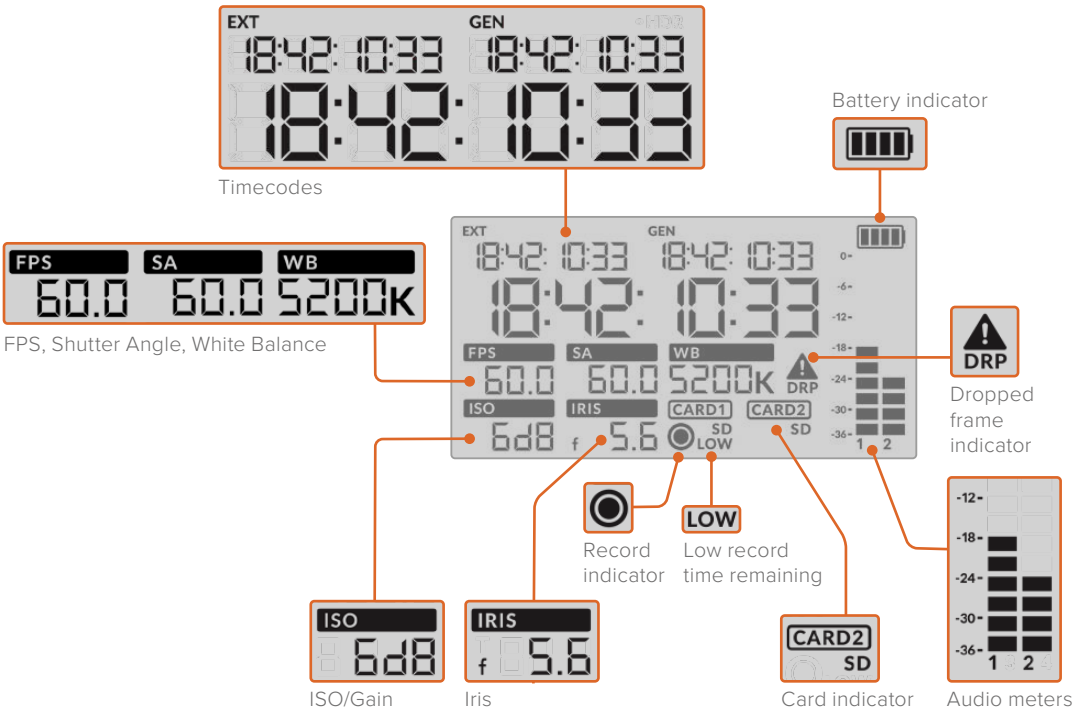

Timecodes

Your URSA Broadcast G2 displays three timecodes. If you have an external timecode connected, this will be shown under the 'ext' indicator in the top left of the status LCD. Your camera's internally generated timecode is shown next to this under the 'gen' indicator. Both the external and generated timecodes are shown in hours, minutes, seconds and frames.

The larger, main timecode indicator displays your current timecode as either clip duration or timecode. You can switch between these two display modes by pressing the 'timecode' button underneath the status LCD.

Battery indicator

If your URSA Broadcast G2 is running on battery power, this indicator displays remaining battery life in 25% increments. Each of the battery indicator's four bars corresponds to 25% battery life remaining. When your battery drops below 20% charge, the color of the status

LED, near the record button begins to flash. It will alternate slowly between red and orange during recording and alternate between white and orange during standby mode.

If the mains power connector is plugged into your camera, the battery indicator shows as full.

FPS, Shutter Angle, White Balance

The 'FPS,' 'SA,' and 'WB' indicators display your camera's current frame rate, shutter angle and white balance. The 'fps' indicator shows the current sensor frame rate.

For more information on sensor and project frame rates, see the 'touchscreen controls' section in this manual.

ISO/Gain

Displays your camera's currently set gain.

Iris

Displays your current lens aperture. Depending on your lens type, this will be displayed as an 'f' or 'T' stop.

Card Information

The 'card 1' and 'card 2' indicators will appear on your URSA Broadcast G2's status LCD when these slots are occupied.

The 'SD' indicator appears if you are recording on SD cards, and disappears if you are recording on CFast cards.

Record Indicator

While recording, a circular indicator will appear under the card or cards being currently written to.

Low Time Remaining

A 'low' indicator will appear under the relevant card when you have approximately 5 minutes of record time remaining.

Audio Meters

The peak audio meters display audio levels when using the internal microphone, or via external audio when connected. The display is calibrated to dBFS units and features peak hold indicators which stay visible for a short time so you can clearly see the maximum levels reached.

To achieve optimum audio quality, ensure your audio levels do not reach 0 dBFS. This is the maximum level that your camera can record, meaning that any audio that exceeds this level will be clipped, resulting in distortion.

Dropped Frame Indicator

This indicator will flash when your camera detects dropped frames. Once you stop recording, the indicator will remain on the screen to let you know that the previous clip detected dropped frames. This warning disappears the next time you start recording, or if you power cycle the camera. For more information on avoiding dropped frames, see the 'storage media' section in this manual.

NOTE You can set your URSA Broadcast G2 to stop recording if dropped frames are detected. See the 'record settings' section in this manual for more information. This feature is user selectable as you may be able to get away with brief periods of 'burst' recording at higher frame rates or resolutions when shooting to slower media.

14 Status LCD Controls

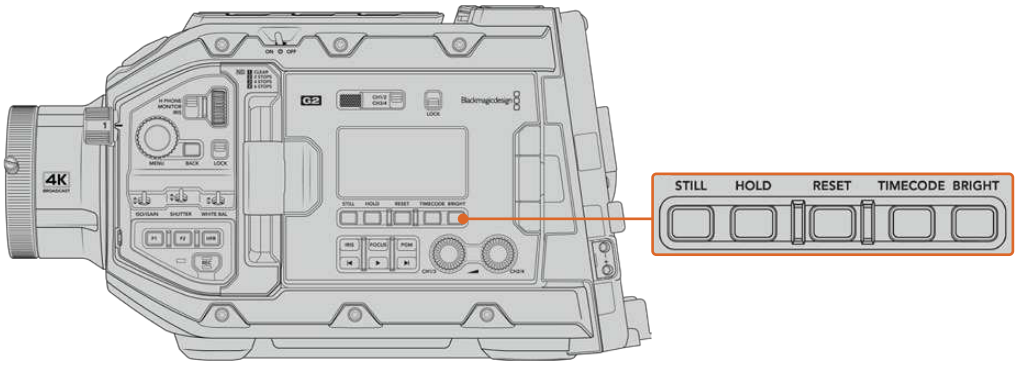

URSA Broadcast G2 status LCD controls

Still

Press this button to capture a still image as a single uncompressed DNG frame. Image files will be saved to the 'stills' folder in the root directory of the media you are currently recording to. These will follow the file naming convention for video clips but the filename will have an 'S001' representing the 'still number' as the last four digits of the filename. To confirm you have successfully saved a still, an image of a camera will show in the top right corner of the URSA Broadcast G2 touchscreen, and the record indicator on the status LCD will flash three times.

Hold

Use this button to temporarily hold the main status LCD timecode when the timecode is in free running time of day code. The timecode will continue to run in the background and return to its actual position when you release the 'hold' button. While holding you can take note of the timecode for a particular event. This can be useful in electronic news gathering or documentary situations for noting key timecode points.

Reset

The reset button allows you to reset the timecode to 00:00:00:00 when you are setting your preset timecode.

Timecode

Press the 'timecode' button to toggle the main timecode display's format between clip duration and timecode. By default the timecode will be free running time of day code as this is the most frequently used. If you press and hold the 'timecode' button for five seconds it will switch the camera into record run timecode and the timecode generator will flash as well as the first two digits of the large timecode display. This indicates that you are now editing your preset timecode and allows you to set a specific timecode number for your preset timecode.

Pressing 'reset' at this stage will zero the timecode and then you can turn and press the menu wheel to set the desired value starting with hours, minutes, seconds and then frames. When you are happy with the timecode, press and hold the 'timecode' button again for three seconds to set this as your preset timecode point. You will notice that the timecode generator now shows this value and will only increment when the camera is recording giving you continuous ascending timecode values. To switch your timecode back to free running time of day code, press the 'timecode' and 'hold' buttons simultaneously for three seconds.

Bright

Press the 'bright' button to cycle through four brightness settings for your URSA Broadcast G2's LCD status display. The settings are 'off,' 'low,' 'medium' and 'high.'

15 Control and Playback Buttons

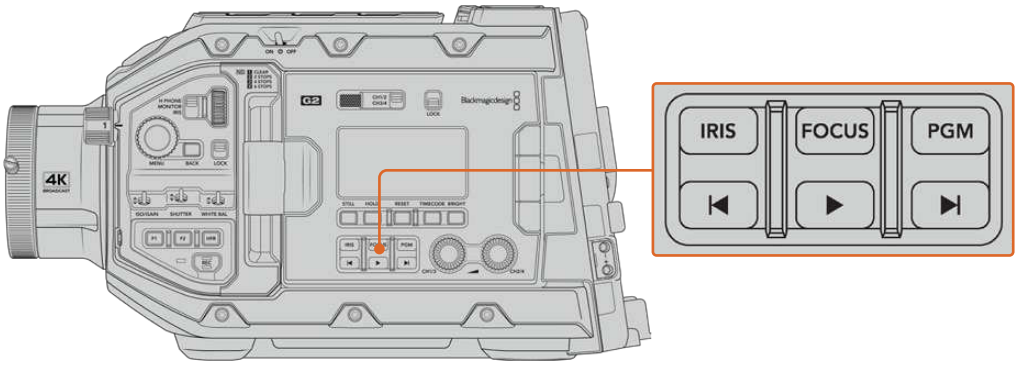

URSA Broadcast G2 control and playback buttons

Iris

The 'iris' button activates the automatic aperture setting on compatible lenses. When using video dynamic range settings, a single press of the iris button will set an average exposure based on the highlights or shadows in your shot. When using film dynamic range settings, pressing the iris button sets your exposure to the brightest highlight in your shot. This button works with compatible EF lenses and PL lenses connected with a compatible broadcast lens controller.

To set your aperture manually, press the forward and reverse skip transport buttons.

Focus

When using a B4 or EF lens that supports electronic focus adjustments, press the 'focus' button to activate auto focus. A white focus square will appear on any viewfinder or monitor connected to your URSA Broadcast G2. Anything within the square will be correctly focused. When the lens is focused, the square will disappear.

NOTE To use the 'focus' button, your B4 lens must have servo focus control, with the servo activated. See the 'getting started' section for more information. Some EF lenses have both manual and auto focus modes. If using the optional EF lens mount, in order for URSA Broadcast G2 to be able to auto focus with your lens, you need to ensure that your lens is set to auto focus mode.

Program

The program button is marked PGM and lets you switch the LCD and front SDI output between the camera view and any signal plugged into the 12G-SDI input on the rear panel. This means if you're using the camera in a live broadcast, you can plug in the switcher's program output and monitor it during the shoot. Press and hold the program button to see your program feed. The program feed will continue to display whilst the program button is being held.

If you want to lock the LCD and front SDI output to display the program input feed, then double press the program button to lock to the program feed. Pressing the program button again will exit the program feed and return to the camera view.

Playback Control Buttons

The playback buttons let you start and stop playback, plus skip to the next or previous clip. When using an EF lens, the forward and reverse skip buttons can also be used to open or close the iris when using compatible lenses. Refer to the 'playback' section for more information on how to use the playback buttons.

16 Audio Level Adjustment Knobs

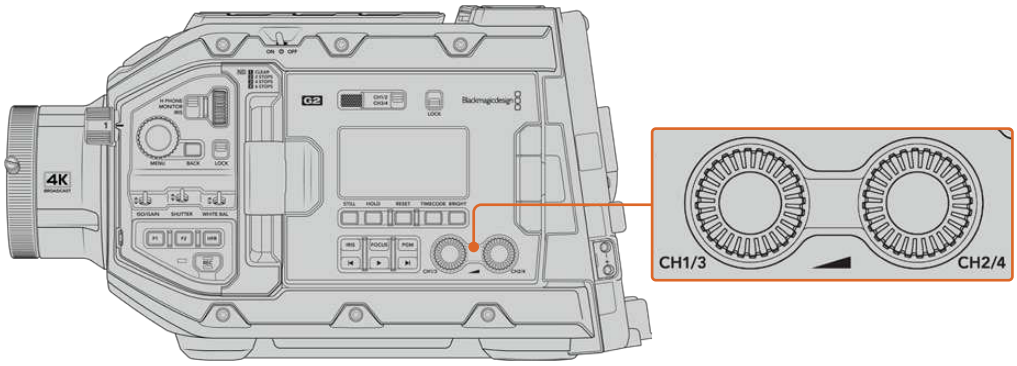

URSA Broadcast G2 audio adjustment knobs

Use the built in adjustment knobs to set the recording levels for audio channels 1 and 2. Turn each knob clockwise or counterclockwise to increase or decrease the recording level for each channel of audio. Monitor the corresponding on screen audio meters as you adjust each knob so you can see the best level to set it to.

Internal Control Panel

With your URSA Broadcast G2's foldout monitor open, you can access the internal control panel. Use the controls here to set your audio inputs as well as phantom power settings, iris, focus, menu and playback controls and more.

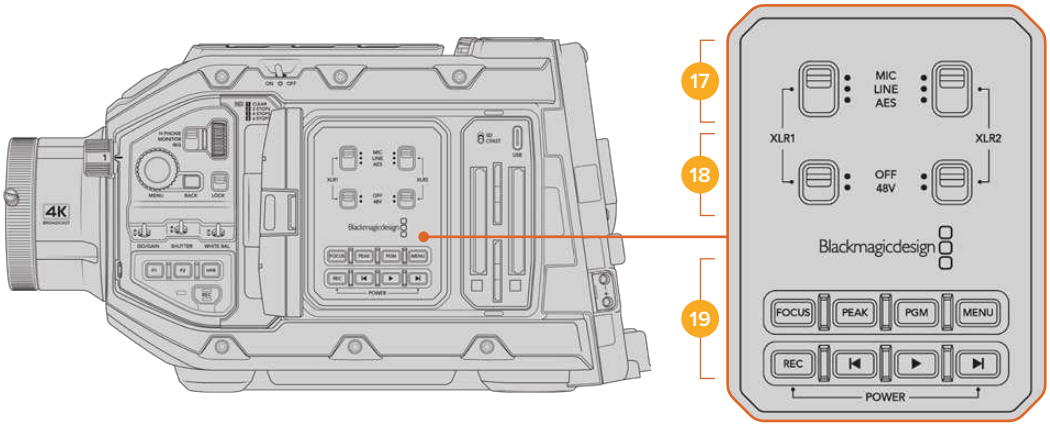

URSA Broadcast G2 internal control panel

17 XLR1/XLR2

Use these switches to set how your URSA Broadcast G2's XLR inputs behave when selected as an input source. The options available are mic audio, line level audio and AES digital audio.

18 Phantom Power

The camera's XLR inputs can provide 48V phantom power so you can use microphones that aren't self powered. Move this switch to '48V' to enable phantom power for any microphone connected to the XLR above, or 'off' to disable phantom power.

It is standard practice to plug in your XLR cable before switching phantom power on. It is also important to switch phantom power to 'off' when you no longer have a phantom powered microphone connected. Connecting devices that don't have phantom power protection built into their AES XLR outputs whilst still sending phantom power from the camera's XLR audio inputs may damage your equipment. Always ensure that the +48V switch is turned 'off' when you disconnect your microphone.

19 Control and Playback Buttons

Focus

When using a B4 or EF lens that supports electronic focus adjustments, press the 'focus' button to activate auto focus. A white focus square will appear on the fold out monitor. Anything within the square will be correctly focused. When the lens is focused, the square will disappear.

To use the 'focus' button, your B4 lens must have servo focus control, with the servo activated. See the 'getting started' section for more information. Some EF lenses also have both manual and auto focus modes. In order for URSA Broadcast G2 to be able to auto focus with your lens, you need to ensure that your lens is set to auto focus mode.

Peak

Press the 'Peak' button to activate focus peaking. Your camera has two focus peaking modes, traditional focus peaking, which artificially sharpens areas of the image that are in focus, and 'colored lines' with overlays the sharp areas of your image with black, white, red, green or blue colored lines. See the 'monitor settings' section of this manual for more information.

TIP If you are recording your video output to a Blackmagic Video Assist or HyperDeck Studio HD Mini, you may want to ensure that you don't have peaking switched on for that output. This can be done by using our 'clean feed' feature on your front SDI or main SDI.

For more information on outputting a 'clean feed' see the 'monitor settings' section in this manual.

Program

The program button is marked PGM and lets you switch the LCD and front SDI output between the camera view and any signal plugged into the camera's 12G-SDI input on the rear panel. This means if you're using your camera in a live broadcast, you can plug in the switcher's program output and monitor it during the shoot. Press and hold the program button to see your program feed. Double press the button to lock the program feed on. Press again to turn the program feed off.

To display a switcher's program output, your camera and switcher must be set to the same resolution and frame rate.

Menu

Press the 'menu' button to open the dashboard. Refer to the 'settings' section for more information about the dashboard feature and how to adjust settings.

Record

Press any of the record buttons marked REC to start and stop recording. Refer to the 'recording' section for more information.

Playback Control Buttons

The playback buttons let you start and stop playback, plus skip to the next or previous clip. When using the EF mount, the forward and reverse skip buttons can also be used to open or close the iris when using compatible lenses. Refer to the 'playback' section for more information on how to use the playback buttons.

NOTE You can power your URSA Broadcast G2 on or off via a combination of internal control panel buttons. Holding the 'rec' and 'forward skip' buttons will power up the camera if it is turned off, or power it off if it is turned on. If your camera's power switch is set to 'on' but your camera is powered down, it may have been powered down via the control panel. Toggle the power switch to return it to normal operation.

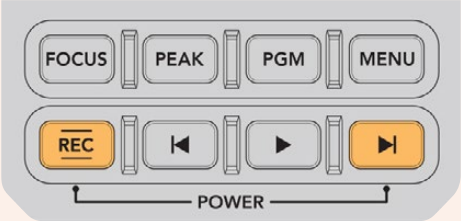

Camera Video Outputs

HD Monitoring Output

Blackmagic URSA Broadcast G2's down converted 3G-SDI out connector always outputs 1080 HD video so you can easily connect to routers, monitors, SDI capture devices, broadcast switchers and other SDI devices. This output is labeled 'front SDI' in the touchscreen settings menu.

12G-SDI Output

The 12G-SDI out connector on the rear panel supports HD and Ultra HD video including high frame rate progressive formats such as 2160p50, 59.94 and 60 on a single SDI cable. Interlaced HD formats are also supported including 1080i50, 59.94 and 60. You can use the 12G-SDI output to connect to any SDI monitor as well as Ultra HD switchers such as ATEM Production Studio 4K. This output can be switched between HD and Ultra HD by selecting 1080p or 2160p in the 'SDI output' setting for the 'main SDI' on the 'monitor' tab on the touchscreen. For more information please refer to the 'monitor settings' section later in this manual.

Connecting to Video Switchers

The SDI outputs allow you to use your camera for live television production. You can connect the rear panel SDI output directly to production switchers for live production work, or to ATEM Camera Converters to convert your signal to optical so you can send it hundreds of meters to a broadcast truck on location.

When connected to a switcher, you can easily view the switcher's program output on your Blackmagic URSA Broadcast G2. To do this, first connect the switcher to your camera's rear 12G-SDI input. Now press the 'program' button marked PGM on your camera's fold out monitor. To switch back to the camera image, simply press the PGM button again.

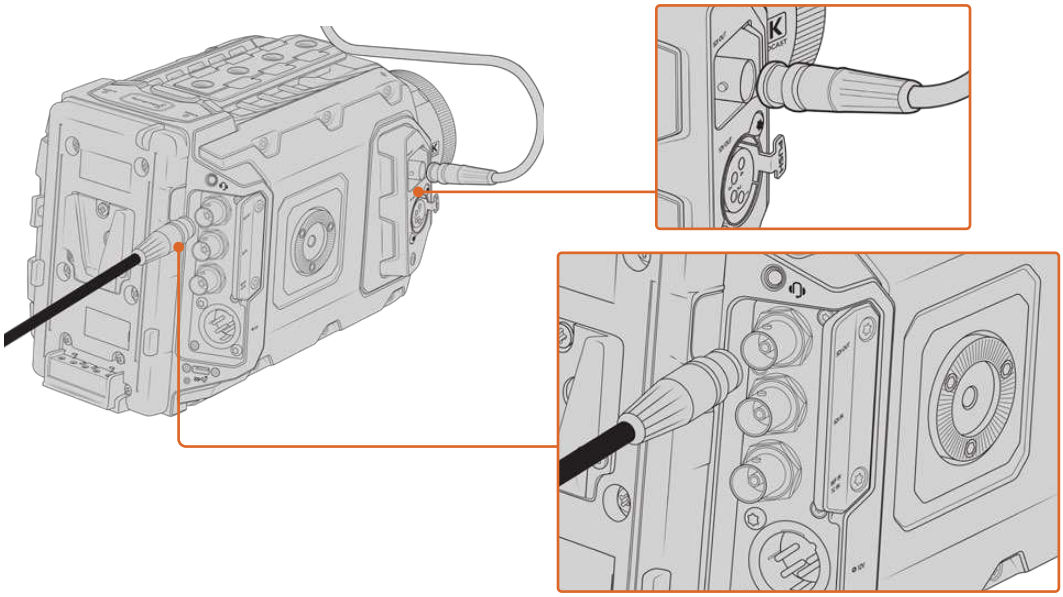

You can connect the 12G-SDI output to any 1080 HD or Ultra HD live production switcher or monitor. The HD monitoring output can be plugged into an external viewfinder, such as the Blackmagic URSA Viewfinder, or plugged into an external monitor when mounted to production equipment. For example a jib arm or crane

Connecting to Monitors

SDI monitoring can be really helpful when accessing the fold out monitor is impractical, such as when secured high on a jib arm, on a crane, or mounted on a vehicle.

Monitoring information is displayed via your HD-SDI monitoring out connector by adjusting the settings for the 'front SDI' on the 'monitor' tab on the touchscreen. These settings enable frame guides and information such as recording details and camera settings. If you simply want to monitor your shots, you can always turn overlays off for a clean SDI output.

Connect the camera's SDI output to SDI monitors or to a Blackmagic SmartScope Duo 4K for live waveform monitoring.

NOTE The rear SDI output and 3G-SDI monitoring output automatically flag HDR video with ancillary metadata when you are working in 'Film' dynamic range and use the Gen 5 Film to Rec 2020 Hybrid Log Gamma or Gen 5 Film to Rec 2020 PQ Gamma LUT on the SDI output. This means you can display stunning HDR images on HDR enabled screens from either SDI output.

SDI Output Formats

Rear SDI Output	2160p23.98, 24, 25, 29.97, 30, 50, 59.94, 60. 1080p23.98, 24, 25, 29.97, 30, 50, 59.94, 60. 1080i50, 59.94, 60.
3G-SDI Monitoring Output	1080p23.98, 24, 25, 29.97, 30, 50, 59.94, 60. 1080i50, 59.94, 60.

TIP To make a live recording with two codecs at once or a simultaneous backup, you can feed the rear SDI out from URSA Broadcast G2 to a Blackmagic Video Assist or HyperDeck.

Touchscreen Controls

Touchscreen

Your Blackmagic URSA Broadcast G2's fold out LCD touchscreen pivots for shooting high and low angles. Buttons on the outside of the LCD panel let you control your URSA Broadcast G2 when mounted on your shoulder using the URSA Viewfinder and the LCD closed.

Touchscreen Features

The LCD touchscreen features a touch and gesture based interface that is specifically designed for fast and intuitive user operation. By touching and swiping on different areas of URSA Broadcast G2's LCD touchscreen, you can quickly access the camera's functions while shooting.

The touchscreen display features upper and lower toolbars. The upper toolbar provides access to commonly used settings such as shutter speed, iris and gain controls. The lower toolbar includes storage indicators, audio meters, transport controls and a histogram.

Your URSA Broadcast G2's LCD touchscreen has a comprehensive head up display and gives you easy access to your camera's most used settings

Upper Toolbar

LCD Monitor Options

Tap the 'monitor' icon at the top left of your URSA Broadcast G2's LCD touchscreen to access the LCD monitor settings. These settings let you toggle and adjust the appearance of your URSA Broadcast G2's monitoring features, including zebra, focus assist, frame guide, and grids. When accessing LCD monitor options, the controls for these features appear in a tabbed menu along the bottom edge of the LCD touchscreen.

Tap the icon at the top left of your URSA Broadcast G2's LCD touchscreen to access LCD monitor options

Zebra

The ‘zebra’ setting toggles the appearance of zebra on the LCD touchscreen, as well as setting the zebra level for all URSA Broadcast G2’s outputs.

Zebra displays diagonal lines over areas of your image that exceed a set exposure level. For example, setting zebra to 100% shows which areas are completely overexposed. This is useful for achieving optimum exposure in fixed lighting conditions.

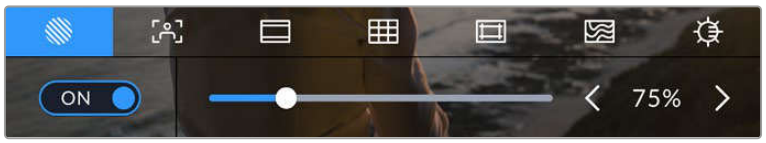

Tap the ‘zebra’ icon while accessing ‘LCD monitor options’ to access your URSA Broadcast G2’s zebra settings

To toggle zebra for the LCD touchscreen, tap the switch icon in the bottom left of the screen while in the ‘zebra’ tab.

Set the exposure level that zebra appears at by dragging the slider left and right, or tapping the arrow buttons next to the zebra level indicator. There are eight zebra presets available including middle gray and middle gray plus one stop, then in five percent increments from 75 to 100 percent exposure.

For information on enabling zebra on your camera’s front and main SDI outputs, see the ‘monitor settings’ section in this manual.

TIP If you’re shooting in variable light such as outdoors on a partly overcast day, setting your zebra level lower than 100 can warn you of potential overexposure.

Focus Assist

The ‘focus assist’ setting toggles the appearance of focus assist on the LCD touchscreen, as well as setting the level of focus assistance for all outputs on your URSA Broadcast G2.

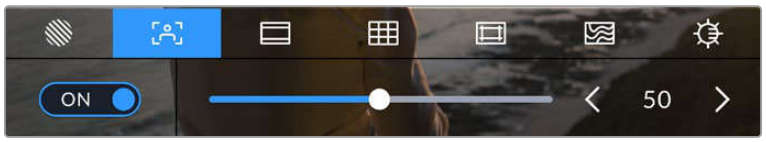

Tap the ‘focus assist’ icon while accessing ‘LCD monitor options’ to access your URSA Broadcast G2’s focus assist settings

To toggle focus assistance for the LCD touchscreen, tap the switch icon in the bottom left of the screen while in the ‘focus assist’ tab.

To set the level of focus assistance for all outputs on your URSA Broadcast G2, drag the slider left and right along the bottom of your touchscreen, or tap the arrow buttons next to the focus assist level.

The optimum level of focus assistance varies shot by shot. When focusing on actors, for example, a higher level of focus assistance can help resolve edge detail in faces. A shot of foliage or brickwork, on the other hand, may show distracting amounts of focus information at higher settings.

For information on enabling focus assist on your camera’s front and main SDI outputs, see the ‘monitor settings’ section in this manual.

TIP Your URSA Broadcast G2 has two focus assist modes. You can switch between 'peaking' and 'colored lines' focus assistance in the 'monitor' settings menu. For more information, see the 'monitor settings' section and the 'focus assist' section.

Frame Guides

The 'frame guide' setting toggles the appearance of frame guides on the LCD touchscreen. You can also choose from frame guide options for all outputs on your URSA Broadcast G2.

Frame guides include aspect ratios for various cinema, television and online standards.

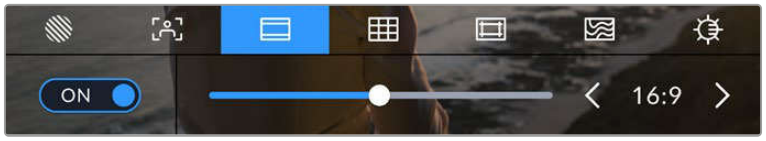

Tap the 'frame guides' icon while accessing 'LCD monitor options' to access your URSA Broadcast G2's frame guide settings

To toggle the appearance of frame guides on your URSA Broadcast G2's LCD touchscreen, tap the switch icon in the bottom left of the screen.

Choose the frame guide you want to use by dragging the slider left and right, or tapping the arrow buttons on either side of the currently selected aspect ratio.

The available guides are:

2.35:1, 2.39:1 and 2.4:1

Displays the broad widescreen aspect ratio compatible with anamorphic or flat widescreen cinema presentation. The three widescreen settings differ slightly based on the changing cinema standards over time. 2.39:1 is one of the most prominent cinema widescreen standards in use today.

2:1

Displays a ratio slightly wider than 16:9 but not as wide as 2.35:1.

1.85:1

Displays another common flat widescreen cinema aspect ratio. This ratio is slightly wider than HDTV 1.78:1 but not as wide as 2.39:1.

16:9

Displays a 1.78:1 aspect ratio compatible with 16:9 HD television and computer screens.

This ratio is most commonly used for HD broadcasting and online videos. The same aspect ratio has also been adopted for Ultra HD broadcasting.

14:9

Displays a 14:9 aspect ratio used by some television broadcasters as a compromise between 16:9 and 4:3 television sets. Ideally, both 16:9 and 4:3 footage remains legible when center cropped to fit 14:9. You can use this as a compositional guide if you know your project may be broadcast by a television station that uses 14:9 cropping.

URSA Broadcast G2 LCD touchscreen with 14:9 frame guides enabled

4:3

Displays the 4:3 aspect ratio compatible with SD television screens, or to help with framing when using 2x anamorphic adapters.

1:1

Displays a 1:1 ratio slightly narrower than 4:3. This square ratio is growing in popularity on social media.

4:5

Displays a 4:5 aspect ratio. This vertical aspect ratio is ideal for portraits and viewing on smartphones.

Custom Frame Guide Ratio

To create your own frame guide ratio for a unique appearance, tap on the ratio displayed between the arrow buttons. On the 'custom frameguide' screen tap the backspace button to delete the current ratio, then use the numeric keypad to specify a new ratio. Tap 'update' to apply your custom frame guide ratio and return to shooting.

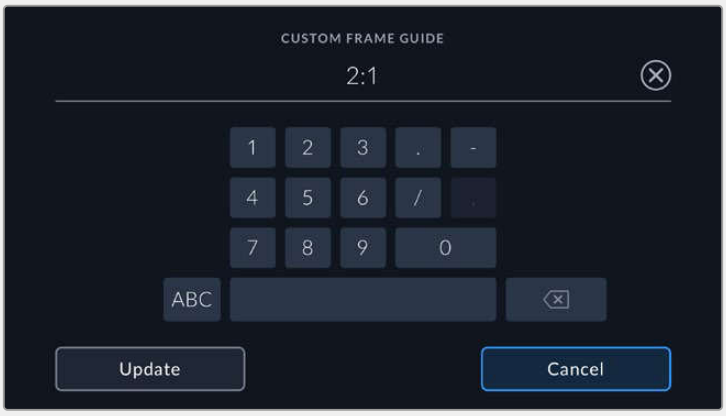

Use the numeric keypad on the 'custom frame guide' screen to enter a new frame guide ratio

TIP You can change the opacity of frame guide overlays. For more information see the 'monitor settings' section of this manual.

NOTE For information on enabling frame guides on your camera's front and main SDI outputs, see the 'monitor settings' section in this manual.

Grids

The 'grids' setting toggles the appearance of a rule of thirds grid, crosshair or center dot on the LCD touchscreen, as well as setting the overlay that will be visible on all URSA Broadcast G2's outputs.

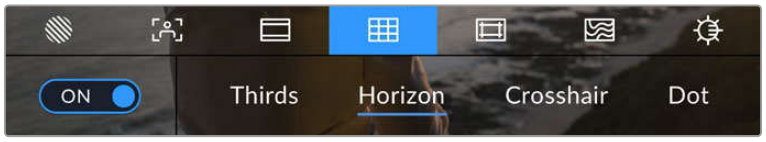

Tap the 'grids' icon while accessing 'LCD monitor options' to access your URSA Broadcast G2's grid settings

Grids and crosshairs are overlays that can help with image composition. When 'grids' are enabled, your URSA Broadcast G2 can show a rule of thirds grid, crosshairs, or center dot.

To toggle the appearance of grids on your URSA Broadcast G2 touchscreen, tap the switch icon in the bottom left of the screen while in the 'frame guides' tab.

When your URSA Broadcast G2 is set up and connected to an ATEM switcher as the current program source, and 'grids' are set to 'on', the red 'program' tally outline will automatically illuminate on the LCD.

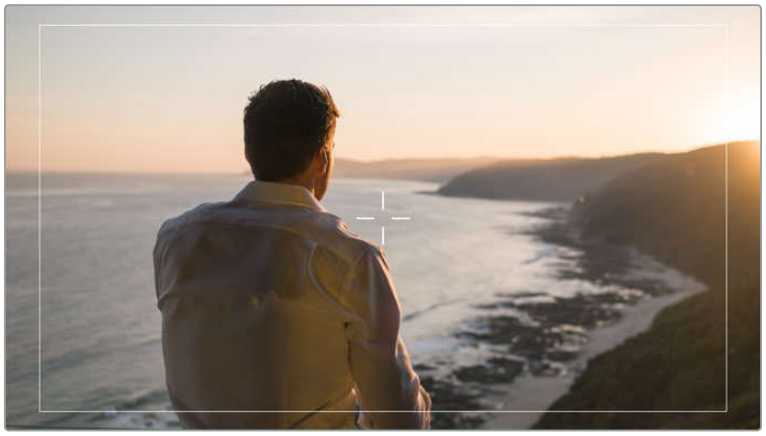

When connected to an ATEM switcher sending a tally signal, a red border will appear around your camera's image preview when grids are set to 'on'

To set which overlay you want to display on all URSA Broadcast G2 outputs, tap the 'thirds,' 'crosshairs,' or 'center dot' options.

The rule of thirds grid automatically scales to any on screen frame guides

Thirds

The 'thirds' setting displays a grid with two vertical and horizontal lines placed in each third of the image. Thirds are an extremely powerful tool to help compose your shots. For example, the human eye typically looks for action near the points where the lines intersect, so it's helpful to frame key points of interest in these zones. An actor's eyeline is commonly framed along the top third of the screen, so you can use the top horizontal third to guide your framing. Thirds are also useful to maintain framing consistency between shots.

Horizon

The 'horizon' meter indicates when your camera is rolled left or right and tilted up or down. This can help you keep the horizon level during handheld shots and balance the camera tilt on a gimbal.

The gray vertical and horizontal indicators move away from the center as the camera is rolled and tilted. The distance the lines move away from the central crosshair is proportional to the amount of roll or tilt. After you calibrate the camera's motion sensor, the motion indicators will illuminate blue when the camera's roll and tilt become level.

Note that if the camera is tilted straight down for an overhead shot or straight up, the horizon meter takes this into account. If you roll the camera to shoot in portrait orientation, the horizon meter rotates its axes 90 degrees.

This table shows examples of the horizon meter indicating tilt and roll of the camera.

Horizon meter	Description
	Straight and level
	Tilted down and level
	Straight and rolled left
	Tilted up and rolled right

For normal use, calibrate the horizon meter for straight and level operation. If you want to use the horizon meter to help maintain a consistent 'dutch angle' or a consistent tilt for a low or high shot, you can calibrate the horizon meter at an incline. For information on how to calibrate the horizon meter, see the 'motion sensor calibration' section.

Crosshairs

The 'crosshair' setting places a crosshair in the center of the frame. Like thirds, the crosshair is a very useful compositional tool, making it easy to frame the subject of a shot in the very center of a frame. This is sometimes used when filming scenes that will be assembled using very fast cuts. Keeping viewers' eyes focused on the center of a frame can make rapid editing easier to follow.

Center Dot

The 'center dot' setting places a dot in the center of the frame. This works in exactly the same way as the 'crosshair' setting, albeit with a smaller overlay that you may find less intrusive.

You can enable a combination of 'thirds' and 'crosshairs' or 'thirds' and 'center dot' by tapping both options in the 'grids' menu. 'Crosshairs' and 'center dot' cannot be selected together.

TIP For information on enabling grids on your URSA Broadcast G2's front and main SDI outputs, see the 'monitor settings' section in this manual.

Safe Area Guides

The 'safe area guides' setting toggles the safe area guides on or off the LCD touchscreen, as well as setting the size of safe area guides for all outputs on your URSA Broadcast G2.

Safe areas can be used in broadcast production to ensure that the most important parts of a shot can be seen by viewers. By keeping the most important parts of your shot within a central 'safe area,' you can avoid cropping on some televisions, as well as leaving space for a broadcaster to add bugs, news tickers and other overlays along the edges of the screen. Many broadcasters require footage to be submitted within a 90% safe area.

Safe area guides can also be used to assist with framing your shot where you know that the shot will be stabilized in post production, which can crop the edges of the image. They can also be used to indicate a specific crop. For example by setting it to 50% whilst recording at Ultra HD 3840x2160 you can see what a 1920x1080 crop of the frame would look like. The safe area guides also scale to your frame guides, so they will adjust to indicate the chosen percentage of your target frame.

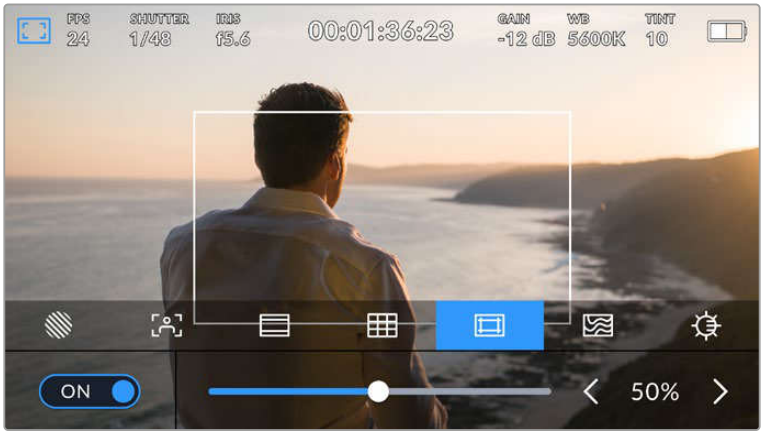

The 'safe area' indicator set to 50%

To toggle safe area guides for the LCD touchscreen, tap the switch icon in the bottom left of the screen while in the 'safe area guides' tab. To set the level of safe area guides for all outputs on your URSA Broadcast G2, tap the left or right arrows on either side of the current numerical value at the bottom of your touchscreen. Alternatively, you can drag the slider left or right.

False Color

The ‘false color’ setting toggles the appearance of false color exposure assistance on the LCD touchscreen.

False color overlays different colors onto your image that represent exposure values for different elements in your image. For example, pink represents optimum exposure for lighter skin tones, while green is a good match to darker skin tones. By monitoring the pink or green false color when recording people, you can maintain consistent exposure for their skin tones.

Similarly, when elements in your image change from yellow to red, that means they are now over exposed.

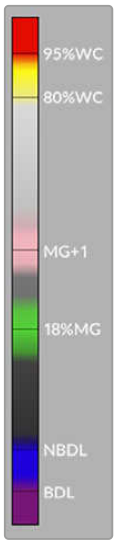

The IRE false color chart on the left side of your camera’s display shows you how to interpret the different false colors.

False Color	Meaning
95%WC	White clipping
80%WC	Near white clipping
MG+1	One stop over middle gray
18%MG	Middle gray
NBDL	Near black detail loss
BDL	Black detail loss

In a well exposed image, skin tones are represented by green and pink false colors

To toggle false color for the LCD touchscreen, tap the switch icon in the bottom left of the screen while in the ‘false color’ tab.

The ‘false color’ exposure assistance tab

Screen Brightness

Tap the 'screen brightness' icon and drag the slider to the left or right to adjust the brightness of your URSA Broadcast G2's touchscreen.

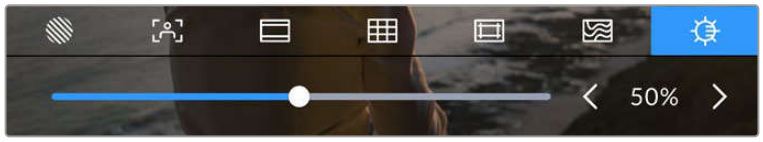

The 'screen brightness' setting set to 50%.

ND Filter indicator

Your URSA Broadcast G2 has an ND filter indicator in the top left of the LCD touchscreen and any SDI outputs set to show status text. The indicator uses the format you've selected in the 'setup' menu.

ND filter setting indicator on your URSA Broadcast G2

NOTE You can adjust the terminology used by the ND filter indicator to reflect the conventions you're used to. The options are ND number, stops and fractions. You can set your preferred format in your URSA Broadcast G2's 'setup' menu.

LUT indicator

A white icon will be visible on the LCD, front SDI or main SDI when 'status text' is switched on and you have a LUT applied to that output. If you are recording to Blackmagic RAW and have 'Apply LUT in File' switched on in the 'Record' settings the LUT icon will be blue.

The LUT icon lets you know that you have a LUT applied to the image

Frames Per Second

The 'FPS' indicator displays your currently selected frames per second.

URSA Broadcast G2's frames per second indicator. Tap this to access frame rate settings

Tapping the 'FPS' indicator lets you change your camera's sensor and project frame rates via a menu at the bottom of your LCD touchscreen.

Project frame rate

The project frame rate is URSA Broadcast G2's recording format frame rate and provides a selection of common frame rates used in the film and television industry. This frame rate is normally set to match your playback speed used in your post production workflow.

Your Blackmagic URSA Broadcast G2 has 8 project frame rate settings including 23.98, 24, 25, 29.97, 30, 50, 59.94 and 60 frames per second.

To adjust your URSA Broadcast G2's project frame rate while in the 'FPS' menu, tap the left or right arrows next to the current frame rate at the bottom left of your touchscreen. Alternatively, you can drag the slider left or right.

Tap the arrows on either side of the project frame rate or move the slider to make adjustments

TIP Your URSA Broadcast G2's project frame rate also sets the frame rate of the front and main SDI outputs.

Sensor frame rate

The sensor frame rate sets how many actual frames from the sensor are recorded every second. This frame rate will affect how fast or slow your video will play back at your set project frame rate.

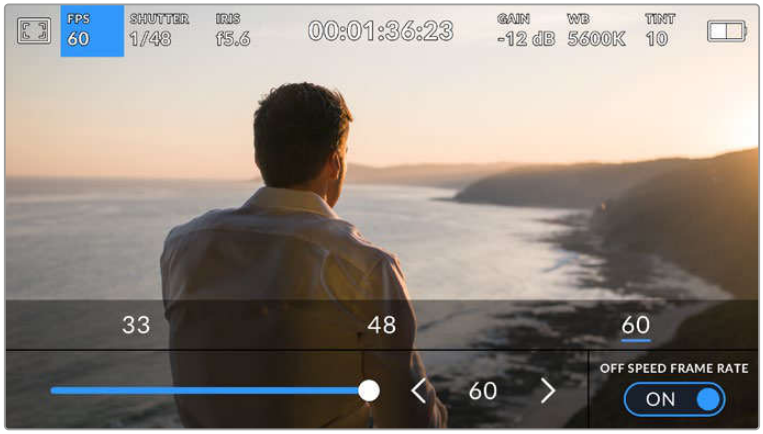

With 'off speed frame rate' enabled, tap a preset or the arrows on either side of the sensor frame rate or move the slider to make adjustments

By default, your URSA Broadcast G2's project and sensor frame rates are matched for a natural playback speed. However, by tapping the 'off speed frame rate' switch icon in the bottom right hand side of your URSA Broadcast G2's 'FPS' menu, you can independently set your sensor frame rate. It's worth mentioning that the 'off speed frame rate' option is only available when recording to Blackmagic RAW or ProRes codecs.

To change your sensor frame rate, tap the arrows next to the sensor frame rate indicator in the lower left of your touchscreen. You can also drag the slider left or right to increase or decrease the frame rate. Once you release the slider, the sensor frame rate will be selected. Above the slider, you can tap on a common off speed frame rate. These are based on your current project frame rate.

You can create dynamic and interesting speed effects in your clips by varying the sensor frame rate. Setting the sensor frame rate higher than your project frame rate will create slow motion during playback. For example, shooting with a 60 FPS sensor frame rate and playing back at a 24 FPS project frame rate creates slow motion at less than half the real speed of action. Alternatively, the lower your sensor frame rate, the faster your clips will appear. The principle is similar to overcranking and undercranking a film camera. Overcranking speeds up the sensor frame rate so you can stretch out moments in time during playback to enhance emotion. Undercranking slows down the sensor frame rate so you can increase the action in fast moving scenes. The creative possibilities are endless and entirely up to you!

For information on the maximum frame rates available for each recording format and codec, refer to the table in the 'recording' section of this manual.

NOTE When 'off speed frame rate' is selected your URSA Broadcast G2's audio and video are no longer synced. This is true even if you set the same project and sensor frame rate. For this reason, 'off speed frame rate' should never be selected if you want to guarantee audio syncing.

Shutter

The 'Shutter' indicator displays your shutter speed. By tapping this indicator, you can manually change your URSA Broadcast G2's shutter speed or configure shutter priority auto exposure modes.

URSA Broadcast G2's shutter indicator. Tap this to access shutter settings

Shutter speed defines the level of motion blur in your video, and can be used to compensate for varying light conditions. The shutter speed setting for natural motion blur, and the settings available, depend on the frame rate you are using. For example, when shooting at 30p, a 1/60 of a second shutter speed is the equivalent of a 180 degree shutter angle, a very common setting for film projects. However if you are shooting at 25p, you will need to set the shutter to 1/50 for the same look.

For natural motion blur you can calculate the shutter speed by doubling your frame rate. So at 30p, set your shutter speed to 1/60 of a second for natural motion blur.

If you need more light on the sensor, you can set the shutter at the slowest setting corresponding with your frame rate. For example, 1/25 for 25p, or 1/30 for 30p. At the slowest shutter speed, your motion blur will appear slightly exaggerated.

If you want to reduce the motion blur so action appears sharper and more defined, set the shutter to a faster speed, such as 1/120 of a second for 30p, or 1/100 of a second for 25p. If you are familiar with shutter angles, this equates to a shutter angle of 90 degrees.

It's worth experimenting with different shutter speeds to see how this setting can provide different levels of motion blur to your image.

When shooting under lights, your shutter speed can affect the visibility of flicker. Your URSA Broadcast G2 will automatically calculate flicker free shutter speeds for your current frame rate. These speeds are affected by mains power frequency in your region. You can set your local power frequency to 50Hz or 60Hz in your URSA Broadcast G2's setup menu. See the 'setup settings' section in this manual for more information.

Tapping the ‘shutter’ indicator brings up the shutter speed menu along the bottom of your URSA Broadcast G2’s touch screen. If you have auto exposure set to ‘off,’ this screen will show you your currently selected shutter speed, as well as the available flicker free shutter speeds, based on the mains power frequency you have selected in your URSA Broadcast G2’s ‘setup’ menu. For more information, see the ‘setup settings’ section in this manual.

NOTE The characteristics of different light sources may still cause flicker even when using flicker free shutter speeds. We recommend always performing a test shoot when not using continuous lights.

To select one of the flicker free shutter speeds, simply tap on one of the displayed shutter values. Using the arrows on either side of the current shutter value indicator will cycle through some of the most commonly used values.

Your URSA Broadcast G2 will suggest flicker free shutter speeds based on the mains power frequency you choose in the ‘setup’ menu

If you would like to choose a specific shutter value, you can do so by double tapping the current shutter indicator at the bottom left of your screen. This will bring up a keypad that allows you to type in any shutter value you wish.

If you type in a shutter value that is less than your current frame rate, for example 1/25th when shooting at 29.97 frames per second, the nearest achievable shutter value will be used. The nearest shutter speed in this example would be 1/30th.

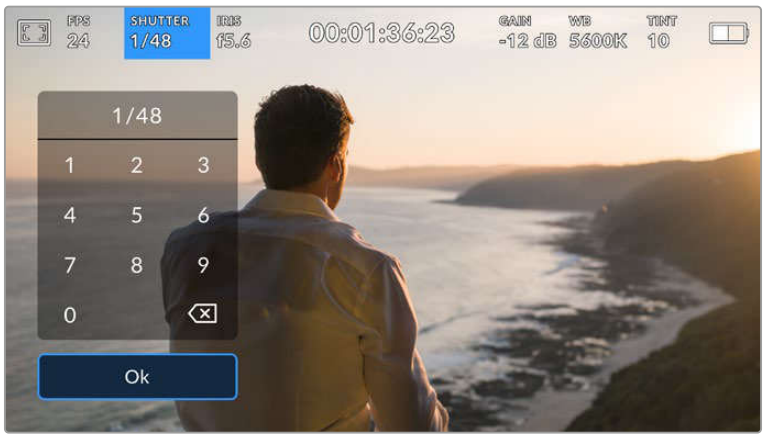

The manual shutter keypad allows you to type in any shutter value you wish

Your URSA Broadcast G2 has three shutter based auto exposure modes. To select one of these, tap the ‘auto exposure’ button in the far right of the shutter menu.

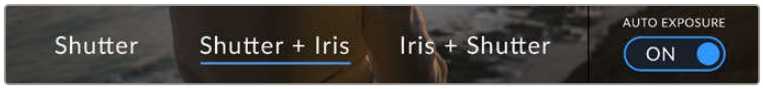

Tap ‘auto exposure’ to access shutter based auto exposure modes

Shutter

This setting automatically adjusts shutter speed to maintain a constant exposure while keeping iris aperture constant. If you want to maintain a fixed depth of field, this is the setting to choose. It's worth mentioning that the subtle automatic adjustments of the shutter may have an effect on motion blur. It's also worth keeping an eye out for any flicker that may be introduced from various light fixtures on indoor shoots. URSA Broadcast G2's auto iris feature is not available when the 'shutter' auto exposure mode is selected.

Shutter + Iris

Maintains the correct exposure levels by adjusting the shutter, then the aperture. If the maximum or minimum available shutter speed is reached and exposure still cannot be maintained, URSA Broadcast G2 will begin adjusting the aperture to keep exposure constant.

Iris + Shutter

Maintains the correct exposure levels by adjusting the aperture, then the shutter speed. If the maximum or minimum available aperture is reached and exposure still cannot be maintained, URSA Broadcast G2 will begin adjusting the shutter speed to keep exposure constant.

TIP When an auto exposure mode that effects the shutter is enabled, a small "A" will appear next to the shutter speed indicator at the top of your URSA Broadcast G2 touchscreen.

Iris

The 'Iris' indicator displays your current lens aperture. By tapping this indicator, you can change the aperture of compatible lenses and configure iris based auto exposure modes.

Your URSA Broadcast G2's iris indicator. Tap this to access iris settings

NOTE To adjust your iris from the LCD touchscreen, your URSA Broadcast G2 must be fitted with a lens that supports changing aperture via the camera. If you are using a B4 or PL lens connected via the broadcast 12 pin connector, make sure that the lens iris switch on the handgrip is set to 'A' or 'auto.'

Tapping the 'iris' indicator once brings up the iris menu along the bottom of your URSA Broadcast G2 touchscreen. You'll see your current lens aperture at the far left of this menu. You can change the aperture by tapping the left and right arrows on either side of the current aperture, or moving the slider left or right.

While in the 'iris' menu, tap the arrows on either side of the iris indicator or use the slider to adjust iris settings

Tapping the 'auto exposure' switch icon at the far right of the iris menu opens the iris auto exposure menu.

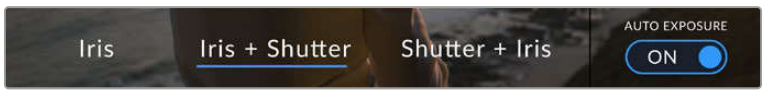

While in the iris menu, tap 'auto exposure' to access iris based auto exposure modes

This gives you the following auto exposure options.

Iris

This setting automatically adjusts the aperture to maintain a constant exposure, while keeping shutter speed constant. This will keep motion blur constant, but may affect your depth of field.

Iris + Shutter

Maintains the correct exposure levels by adjusting the aperture, then the shutter speed. If the maximum or minimum available aperture is reached and exposure still cannot be maintained, URSA Broadcast G2 will begin adjusting the shutter speed to keep exposure constant.

Shutter + Iris

Maintains the correct exposure levels by adjusting the shutter, then the aperture. If the maximum or minimum available shutter speed is reached and exposure still cannot be maintained, URSA Broadcast G2 will begin adjusting the aperture to keep exposure constant.

When an auto exposure mode that effects the iris is enabled, a small "A" will appear next to the iris indicator at the top of your URSA Broadcast G2 touchscreen.

TIP Automatic exposure works smoothly with compatible B4 or PL lenses which are designed for video or film production. EF lenses may produce noticeable 'steps' in exposure when changing aperture. For this reason, we recommend using only 'shutter' auto exposure mode if shooting with EF lenses.

Duration Display

At the top of your URSA Broadcast G2 LCD touchscreen, you'll see your camera's duration display.

Your URSA Broadcast G2's duration display. This will turn red while recording

The duration display provides a timecode counter for checking the duration of your clips and monitoring timecode during recording and playback. The counter displays a time sequence showing Hours:Minutes:Seconds:Frames and will progress through the sequence as you record or play back clips. The timecode will turn red during recording.

The displayed duration of each clip starts from 00:00:00:00 for each clip. The clip duration of the current, or last recorded, clip is displayed on the touchscreen. Time of day timecode is embedded into clips for easier post production.

To see the timecode, simply tap the duration display. Tap the duration display again to return to clip duration.

Additional status indicators may appear around the duration display:

TC	Appears to the right of the duration display when showing timecode.
EXT	Appears to the right of the duration display if an external timecode is connected and valid.
INT	Appears to the right of the duration display if the camera is running off an internal timecode after being 'jam synced' and disconnected.
PRE	Appears to the right of the duration display when you are viewing preset record run timecode.
REF	Appears when a valid reference source is connected and locked, based on the reference input settings.
W	Appears to the left of the duration display when your Blackmagic URSA Broadcast G2 is using a windowed sensor mode.

Gain

The 'Gain' indicator displays your URSA Broadcast G2's current gain setting, or light sensitivity. Tapping this indicator lets you adjust your gain to suit varying lighting conditions.

The optimum setting for URSA Broadcast G2 is 0dB.

Your URSA Broadcast G2's gain indicator. Tap the indicator to access gain settings

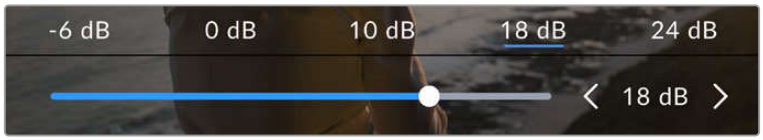

While in the 'gain' menu, your URSA Broadcast G2's gain settings appear along the bottom of the LCD touchscreen. The slider and arrows below the presets let you adjust the gain in 1/3 stop increments.

Depending on your situation, you may choose a lower or higher gain setting. For example, in low light conditions +18dB can be suitable but may introduce some visible noise. In bright conditions -6dB can provide richer colors.

White Balance

The 'WB' and 'TINT' indicators display your camera's current white balance and tint. Tapping these indicators lets you adjust your camera's white balance and tint to suit varying lighting conditions.

Tap the white balance and tint indicators to access white balance and tint settings

Every light source emits a color. For example, a candle flame emits a warm color, and an overcast sky emits a cool color. White balance settings are used to color balance your image so white stays white by adjusting the mix of orange and blue in your image. For example, when shooting under tungsten lamps which emit a warm, orange light, selecting 3200K adds some blue to the image. This balances the color so white is accurately recorded.

Your URSA Broadcast G2 comes with white balance presets for a variety of color temperature conditions. These are:

	Bright sunlight	(5600K)
	Incandescent bulbs	(3200K)
	Fluorescent bulbs	(4000K)
	Mixed light	(4500K)
	Cloud	(6500K)

You can customize any of these presets by tapping or holding the arrow icons to the left and right of the temperature indicator in the bottom left of the 'white balance' menu. Each tap moves the color temperature up or down 50K, but holding the arrow icons down will increase these increments for faster changes. Alternatively, you can move the temperature slider in the middle of the 'white balance' menu.

To further dial in your image, you can adjust the 'tint.' This adjusts the mix of green and magenta in your image. For example, adding some magenta can compensate for the green cast of many fluorescent lights. Many of your URSA Broadcast G2's white balance presets include some tint.

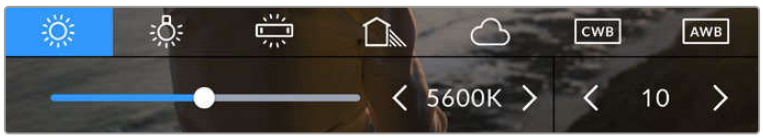

Tapping the white balance and tint indicator on your URSA Broadcast G2 gives you access to five presets, as well as a white balance indicator and slider on the left, and a tint indicator on the right. Adjust these to set a custom white balance for your lighting conditions

While in the 'white balance' menu, your camera's current tint setting is shown at the bottom right of the screen. To adjust the tint, simply tap or hold the arrows to the left and right of the tint indicator. The available range is -50 to +50 in one unit increments. Holding down on the arrows speeds up adjustment.

NOTE Customizing the white balance or tint will change your preset to 'CWB,' or custom white balance. Custom white balances are persistent; your CWB settings will stay configured between power cycles, and when switching to a preset and back to CWB. This makes it easy to compare a custom white balance to the last preset used.

Auto White Balance

Your URSA Broadcast G2 can set white balance automatically. Tapping 'AWB' will bring up the white balance screen.

When setting white balance automatically, a square will be overlaid on the center of your image. Fill this square with a neutral surface such as a white or gray card and tap 'update.' Your URSA Broadcast G2 will automatically adjust its white balance and tint values to ensure that the average of the white or gray within the white balance square is as neutral as possible. Once updated, this will be set as your camera's custom white balance.

Tapping the 'AWB' icon in the white balance menu will bring up the auto white balance screen. Use this with a white or neutral gray surface to automatically set a neutral white balance

Power

Your URSA Broadcast G2's power status is displayed in the top right of the LCD screen. There are five possible indicators:

Your URSA Broadcast G2's power indicator is at the top right of the LCD touchscreen. While using battery power, tapping this toggles between 'voltage' and 'percentage' displays

AC	**AC**	Displayed when your URSA Broadcast G2 is plugged into mains power.
80%	**Percentage**	If you are using a percentage accurate battery and plate combination and have your battery display set to 'percentage,' the indicator will display your battery level as a percentage. At 20% charge remaining, the indicator will turn red.
	Battery bars	If your battery display is set to 'percentage' but your battery plate and battery combination does not support percentage accurate battery information, your URSA Broadcast G2 will display a battery icon that drains in 25% increments. At 20% charge remaining, the battery bar will turn red.
16.4v	**Voltage**	When your battery display is set to 'voltage,' this indicator will display your battery's remaining voltage. When your battery drops below 12.5 volts, this indicator will turn red. Your URSA Broadcast G2 will automatically shut down once the battery reaches 11.9 volts.
FIBER	**Fiber**	Displayed when you have Blackmagic Camera Fiber Converter attached to your camera and are powering the camera through the SMPTE fiber cable. If you have an XLR power cable plugged into URSA Broadcast G2 whilst the converter is attached, the AC icon will be displayed instead.

When using battery power, you can switch between 'voltage' and 'percentage' or 'battery bars' power indicators by tapping the power indicator.

Lower Toolbar

Histogram

At the bottom left of your URSA Broadcast G2 touchscreen, you'll see the histogram. The RGB histogram shows the tonal distribution of the image separated into individual red, green and blue channels.

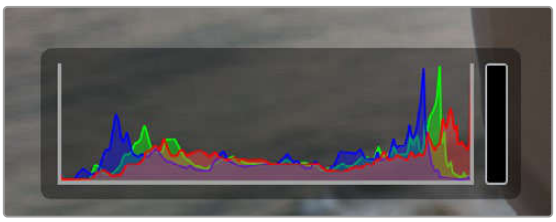

The histogram gives you an indication of the tonal range between shadows and highlights in your clip. It is also a helpful tool for checking the balance of your exposure and to prevent your highlights from clipping

The left edge of the histogram displays shadows, or blacks, and the far right displays highlights, or whites. When you close or open the lens aperture, you'll notice the information in the histogram moves to the left or right accordingly. You can use this to check 'clipping' in your image shadows and highlights. When clipping occurs in the red, green or blue channel, the respective indicator on the right side of the histogram lights up. If the left and right of your edges of the histogram come to an abrupt stop rather than falling off gradually, you may be losing highlight or shadow detail.

If you don't see a histogram in the bottom left of your touchscreen, your LCD monitor settings may be set to display 'codec and resolution.' See the 'monitor settings' section in this manual for more information.

Record button

Next to the histogram at the bottom of your URSA Broadcast G2's touchscreen, you'll see a round button with a red center. This is the 'record' button. Tap this once to begin recording, and tap it again to stop. While recording, button, media bar icon and the timecode at the top of your URSA Broadcast G2 touchscreen will turn red.

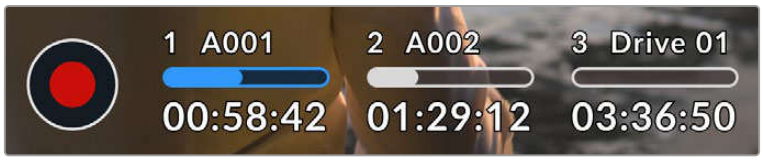

Your URSA Broadcast G2's 'record' button, next to the storage indicators at the bottom of the LCD touchscreen

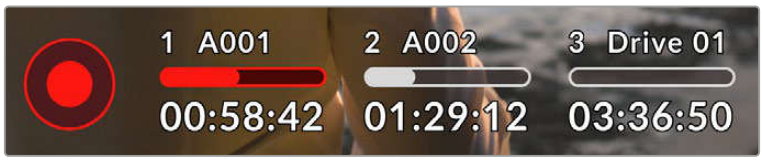

The 'record' button turns red when recording

Apply LUT in File

If you are recording to Blackmagic RAW and have chosen to apply a LUT to your recorded clips in the 'record' settings tab, a blue 'LUT' icon is displayed next to the 'record' button. The LUT indicator is displayed in both standby and record mode.

For more information on recording LUTs with Blackmagic RAW, refer to the 'Record Settings' section later in this manual.

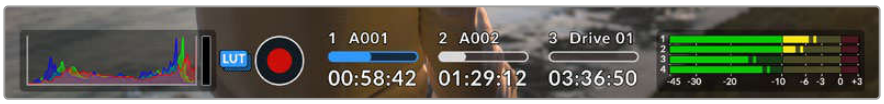

A blue 'LUT' icon is displayed when recording to Blackmagic RAW

Record LUT to Clip

If you are recording to ProRes, H.264 or H.265 and have chosen to record a LUT to your recorded clips, a red 'LUT' icon is displayed next to the 'record' button. The LUT indicator is displayed in both standby and record mode.

For more information on recording LUTs with ProRes, H.265 or H.264 video codecs, refer to the 'Record Settings' section later in this manual.

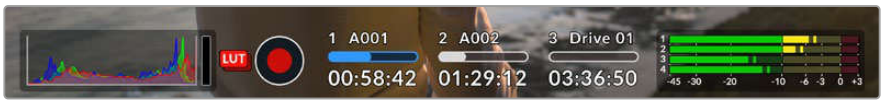

A red 'LUT' icon is displayed when recording to ProRes, H.265 or H.264

Dropped Frame Indicator

The 'record' button will be overlaid with a flashing '!' indicator if your URSA Broadcast G2 begins dropping frames while recording. The time remaining indicator for the affected card or cards will also turn red. For example, if you are recording in dual card mode and card 1 is dropping frames, the '!' indicator will appear over the 'record' button, and the time remaining indicator on card 1 will turn red. This lets you know if a particular card is too slow for your currently selected codec and resolution. The 'dropped frame indicator' will also display if you have dropped a frame on the previously recorded clip. This indicator will continue to display until another clip is recorded, or the camera is power cycled. Refer to the 'Choosing a CFast 2.0 card' 'Choosing a fast SD Card' and 'Choosing a fast SSD' sections in this manual, for more information on how to avoid dropping frames.

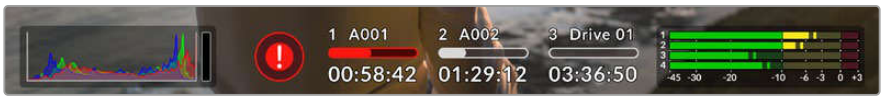

Dropped frame indicator for CFast card 1 dropping frames

TIP If you have your URSA Broadcast G2's status LED enabled, this will rapidly flash red when dropped frames are detected. For more information, see the 'setup settings' section in this manual.

NOTE You can set your URSA Broadcast G2 to stop recording if dropped frames are detected to prevent a situation where you waste time shooting unusable footage if you don't notice the dropped frame indicator. See the 'record settings' section in this manual for more information.

Storage Indicators

At the bottom of your URSA Broadcast G2 touchscreen next to the 'record' button, you'll see the storage indicators.

Recording Time Remaining

When a CFast or SD card is inserted, or a USB-C flash disk or SSD is attached to your camera, the storage indicators show how much recording time is left on each card or drive. The recording time is displayed in hours:minutes:seconds based on your chosen frame rate and codec and is automatically recalculated if you change either of these settings.

When there is approximately 5 minutes remaining on your card or drive, the indicator text will turn red. If you are recording to a single card or drive or have filled any additional storage attached to your camera, the indicator will blink slowly when there is 3 minutes remaining and blink quickly when there is less than 30 seconds of recording time remaining.

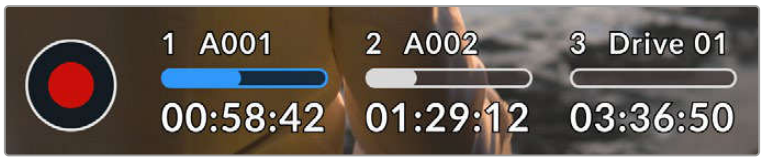

Your URSA Broadcast G2's storage indicator will display the name of your CFast card, SD card, SSD or USB flash disk and the remaining record time

Media Bar

The media bar icon above the recording time will be either blue, white or red depending on its current status and will display the used space on the card or drive.

	The blue drive icon indicates the active drive. This is the drive that will be used for recording.
	A white drive icon indicates there is media present, but not active. A solid white icon indicates the media is full.
	The bar will illuminate red during recording.

To switch recording to a different card or drive, press and hold the name or media bar of the card, USB-C flash disk or SSD that you wish to record to.

Tapping the storage indicators will open the media pool, tap the media storage icon at the top of the touchscreen to bring up the storage and formatting menu.

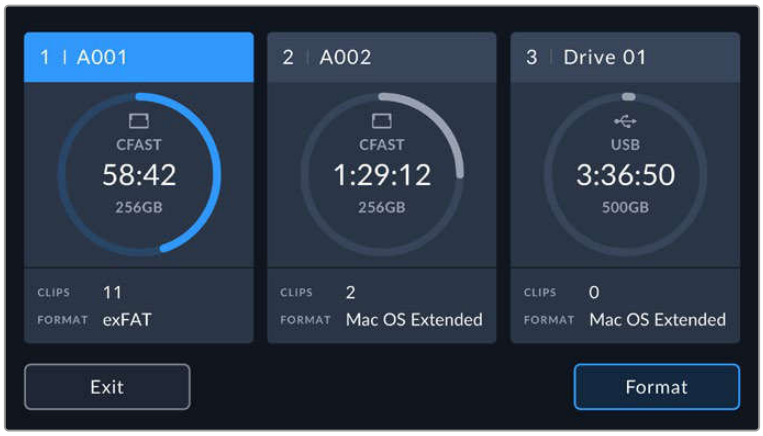

Tap the storage indicators to open the media pool and then tap the storage icon to enter the storage and formatting menu

This menu displays the amount of free space on each CFast card, SD card, USB-C flash disk or SSD currently connected to your URSA Broadcast G2, as well as the name of the card or drive, remaining record time, total number of clips, and the file format for each card or drive. Tapping the card or drive name in the storage menu sets it as the active card or drive. Your URSA Broadcast G2 will fill this card first.

You can format your media from this menu. For more information on formatting media using URSA Broadcast G2, see the 'preparing media on Blackmagic URSA Broadcast G2' section of this manual.

Audio Meter

The peak audio meters display audio levels for channels 1, 2, 3 and 4 when using the internal microphone, or via external audio when connected. You can display PPM or VU meters. To change the meter type, see the 'setup' settings later in this manual.

To achieve optimum audio quality, ensure your audio levels do not reach 0 dBFS. This is the maximum level that your camera can record, meaning that any audio that exceeds this level will be clipped, resulting in distortion.

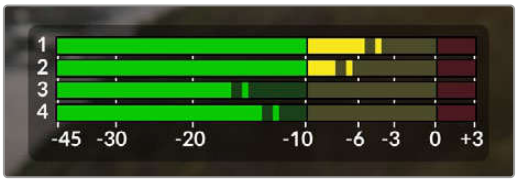

The colored bars on the audio meter represent peak audio levels. Ideally your peak audio levels should fall in the upper end of the green zone. If your peaks enter into the yellow or red zones your audio is in danger of clipping.

You can tap the audio meter to bring up signal level controls for all audio input channels as well as headset or speaker volume.

Tap the audio meters on your URSA Broadcast G2 LCD touchscreen to easily access volume and headset or speaker settings

Focus Zoom

You can magnify any part of your URSA Broadcast G2's preview image by double tapping the LCD touchscreen in the location you would like to zoom. You can move the magnified image by dragging your finger around the touchscreen. This is very helpful when checking focus. To return to the standard magnification, double tap on the touchscreen again.

When you have 'focus zoom' enabled you can also make a pinch to zoom multitouch gesture to adjust the zoom level on the touchscreen. The 'setup' menu on your URSA Broadcast G2 lets you configure a function button as a 'focus zoom' toggle that behaves like a double tap on the touchscreen. This can be configured to show on the LCD or the front or main SDI to outputs. For information on how to configure a function button as 'focus zoom', see the 'Function Button Behaves as Preset or Toggle' section.

While zoomed in, an indicator in the top left of your LCD touchscreen will show which part of the image you are viewing. You can move around the image using the menu wheel or by dragging your finger around the screen.

Full Screen Mode

It can be useful when framing or focusing a shot to temporarily hide your touchscreen's status text and meters. Simply swipe up or down on URSA Broadcast G2's LCD touchscreen to hide these. The record indicator, frame guides, grids, focus assist and zebra will remain visible.

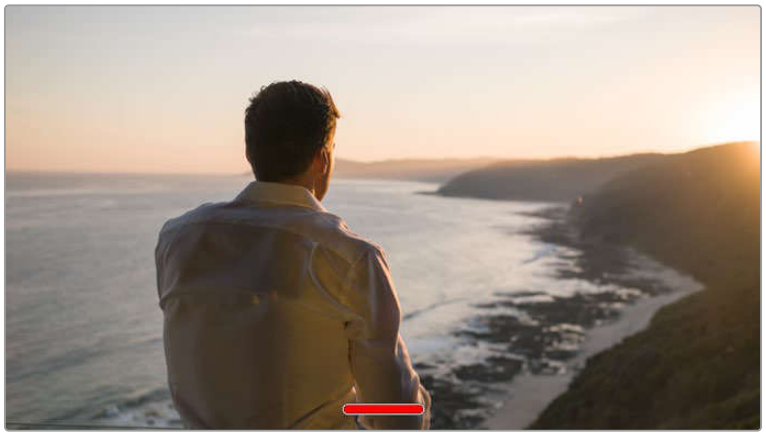

Swipe up or down to hide all status indicators on your URSA Broadcast G2 LCD touchscreen

Playback Menu

Press the 'play' control button to access the playback menu. You can control previously recorded clips with your camera's control buttons or the LCD touchscreen.

The LCD touchscreen displays a timeline of segments representing all the recorded clips. Each segment in the timeline represents an individual clip. The current clip name and number is shown at the top left of the display and the total number of clips on the card or drive is shown in brackets.

The counter ahead of the timeline displays the current location of the playhead and the counter after the timeline displays the total duration of all the clips.

The playback controls below the timeline let you navigate through the clips.

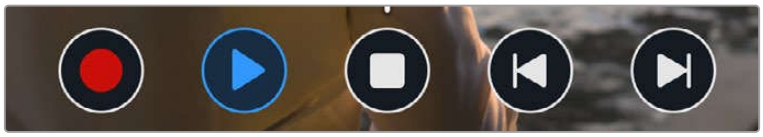

	Tap the ‘record’ button in playback mode to return your camera to standby mode, ready to record.
	Tap the ‘play’ button to view your clips. You are now in ‘playback’ mode.
	Press the ‘stop’ button to stop playback. Pressing the ‘stop’ button a second time will return your camera to standby mode.
	Tap the ‘skip’ back button once to move the playhead to the first frame of the current clip. If the playhead is already on the start of a clip, it will jump to the first frame of the previous clip.
	Tap the ‘skip’ forward button once to move the playhead to the last frame of the current clip. If the playhead is already at the end of a clip, it will jump to the first frame of the next clip.
	Press and hold the ‘skip’ back and ‘skip’ forward buttons to change them to ‘rewind’ and ‘forward’ shuttle buttons. Now you can use them to change the shuttle speed to 2x, 4x, 8x or 16x. To reduce the shuttle speed, simply tap the button in the opposite direction.

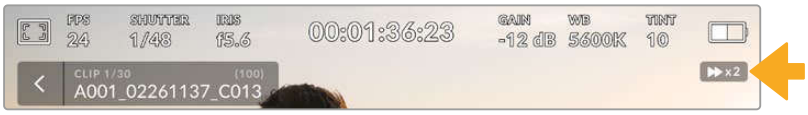

The shuttle speed indicator displays the speed and direction of footage being fast forwarded or reversed

You can change the playback mode from ‘all clips’ to ‘single clip’ in the ‘setup’ menu. In ‘single clip’ mode the last recorded clip is displayed when you press ‘play’.

TIP Swipe up or down on your URSA Broadcast G2’s touchscreen to hide status text while playing back footage. Entering the slate in playback mode will allow you to mark the current clip ‘good take’ in metadata. For more information, see the ‘entering metadata’ section in this manual.

Looping playback

Tapping the play button more than once enables the ‘loop’ feature. Looping can be useful if you want to continue looping the same clip, or loop all clips on the timeline.

Loop		Once your clip is playing, press the ‘play’ button again to set your camera to play the current clip on a continuous loop.
Loop all		Tap ‘play’ again to play all your recorded clips on a continuous loop.
Play		Tap again to return to real time playback.

Settings

Dashboard

Pressing the 'menu' control button on your URSA Broadcast G2 will bring up your camera's dashboard. This is a tabbed menu containing the settings not available from your URSA Broadcast G2's head up display. Settings are divided by function into 'record,' 'monitor,' 'audio,' 'setup,' 'presets,' and 'LUTS' tabs. Some tabs, such as 'record,' 'monitor,' and 'setup' contain multiple pages. You can cycle between these pages by tapping the arrows on the left and right of the settings screen, or swiping left or right as you would on a smartphone or tablet.

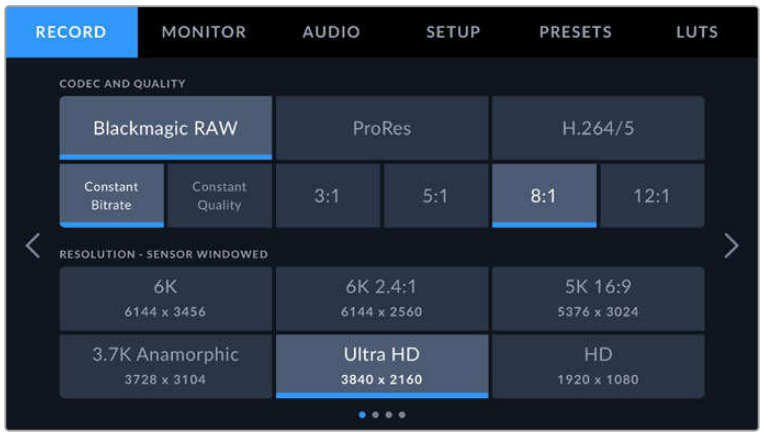

Tap the 'record,' 'monitor,' 'audio,' 'setup,' 'presets,' and 'LUTS' headings to move between your URSA Broadcast G2's dashboard tabs

Record Settings

The 'record' tab allows you to set your video format, codec, and resolution, as well as other settings which affect the footage saved by your URSA Broadcast G2, such as preferred card, detail sharpening and pre-record functionality. This menu has four pages, which you can cycle through by tapping the arrows at the edge of your camera's touchscreen, or swiping left or right.

Record Settings 1

The first page of the 'record' settings tab contains the following settings.

Codec and Quality

The ‘codec and quality’ menu is split into two rows. The top row lets you choose between three codec families, Blackmagic RAW, Apple ProRes and H.264/5, while the bottom row offers quality options in those families. For example, the quality options available in the ProRes codec family are ProRes HQ and ProRes 422. Blackmagic RAW options are divided between four ‘constant bitrate’ and four ‘constant quality’ settings.

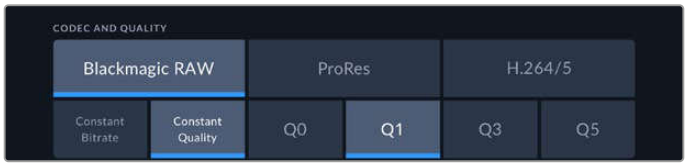

Blackmagic RAW ‘constant bitrate’ and ‘constant quality’ options

TIP The amount of video you can record on your storage media on URSA Broadcast G2 will increase when choosing codecs that utilize higher compression. Refer to the ‘record duration table’ in the ‘recording’ section for more information.

Resolution

This setting works in combination with the ‘codec’ setting. Use it to select the resolution for your desired recording format.

For example, if you want to record Ultra HD clips using ProRes HQ, select ‘ProRes’ and ‘HQ’ in the ‘codec and quality’ menu. Now choose ‘Ultra HD’ in the resolution menu.

Blackmagic RAW ‘resolution’ options

NOTE Blackmagic URSA Broadcast G2 supports Blackmagic RAW in all resolutions, Apple ProRes in Ultra HD and HD, H.265 in Ultra HD and H.264 in HD.

Record Settings 2

The second page of the ‘record’ settings tab contains the following settings.

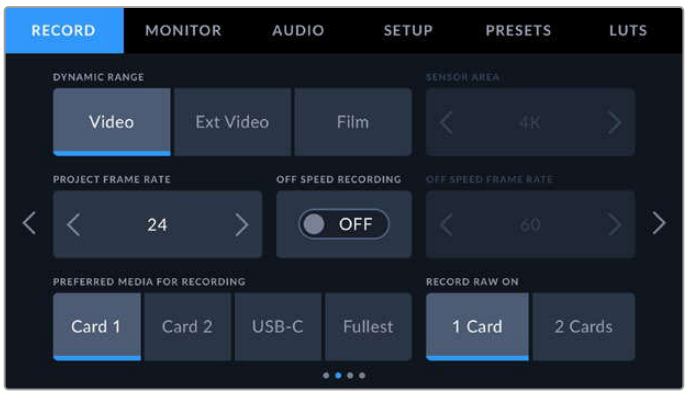

Dynamic Range

Adjust the 'dynamic range' setting by tapping the dynamic range icons. Blackmagic URSA Broadcast G2 has three dynamic range settings:

Video	The 'video' setting is the best choice for recording to a high contrast, saturated look suitable for direct delivery or minimal post processing. Video uses Rec.709 primaries with a pleasing roll off in the highlights. This is a good option if you want an accurate starting point that still has a pleasing gamma curve with room for grading if needed.
Ext Video	The 'extended video' setting is based on Blackmagic Wide Gamut with contrast and saturation applied. The most notable differences to the video mode come from the magenta/green axis having less saturation which is more typical of print film.
Film	The 'film' setting shoots video using a log curve that allows you to maintain the greatest dynamic range and maximizes the information in your video signal to help you get the most out of color grading software, such as DaVinci Resolve.

If you are using 'video' or 'extended video' dynamic range, make sure that display LUT is not enabled on any of the monitor outputs, LCD, Front SDI or Main SDI.

If the display LUT is enabled, the LUT indicator will be visible on the HUD and the image appears to have more saturation and contrast than intended. To check your display LUTs setting, see the 'monitor' settings later in this manual.

Sensor Area

This setting is available when shooting in ProRes, H.265 and H.264 video codecs. It lets you choose between scaling from the full '6K' sensor area, or using a smaller 'window' of the sensor area. Choosing a larger sensor area like 5.3K or 6K gives you a wider field of view whereas choosing a smaller sensor area like 2.7K gives you higher frame rate options. It's important to mention that windowing to a smaller area only uses the center of the camera's sensor, the field of view of any given lens will be narrower due to the crop involved.

When using broadcast lenses on URSA Broadcast G2's B4 mount you should ensure that your sensor area is set to 4K as this is the area of the frame that these lenses will cover. The 5.3K and 6K sensor area is roughly Super 35 size and so is compatible with most EF, F mount and PL lenses.

For more information on 'full' and 'window' formats, see the 'maximum sensor frame rates' section.

Project Frame Rate

The project frame rate is URSA Broadcast G2's recording format frame rate and provides a selection of common frame rates used in the film and television industry. For example, Ultra HD at 29.97 frames per second using ProRes HQ. This frame rate is normally set to match your playback speed and audio sync used in your post production workflow and delivery requirements.

Your Blackmagic URSA Broadcast G2 has 8 project frame rate settings including 23.98, 24, 25, 29.97, 30, 50, 59.94 and 60 frames per second.

NOTE Your camera's project frame rate has a large impact on the 'look' of footage. In broadcast environments, frame rates are typically set to 50, 59.94, or 60 frames per second. These relatively high frame rates are great for capturing smooth motion and eliminate or minimize stutter while panning.

Lower frame rates, such as 24 or 25 frames per second, are typically used for cinema production. These have a distinct filmic 'look,' but require much slower camera movement to avoid stutter.

Off Speed Recording

By default, your URSA Broadcast G2's project and sensor frame rates are matched for a natural playback speed. However, by tapping the 'off speed recording' switch icon you can set your sensor frame rate independently. This option is only available when recording to Blackmagic RAW or ProRes codecs.

Off Speed Frame Rate

With 'off speed frame rate' enabled, tap the arrows next to the 'off speed frame rate' indicator to set your URSA Broadcast G2's sensor frame rate.

The sensor frame rate sets how many actual frames from the sensor are recorded every second. This frame rate will affect how fast or slow your video will play back at your set project frame rate.

For more information on off speed frame rates, see the 'frames per second' section in the 'touchscreen features' section of this manual.

NOTE For information on the maximum frame rates available for each recording format and codec, refer to the 'maximum sensor frame rates' table in the 'recording' section of this manual.

Preferred Media for Recording

Use this setting to select which storage card, SSD or flash disk your URSA Broadcast G2 will record to first when more than one storage slot is in use. The options are 'card 1', 'card 2', 'USB' and 'fullest'. Picking either 'card 1' or 'card 2,' is a matter of personal preference, but using either consistently will let you know which card to swap out first as your storage fills up. 'Fullest card' can help group files chronologically when shooting a single camera project. The 'fullest card' setting is based on the percentage that your storage cards are filled, rather than their sizes or the amount of data used.

The setting you choose is applied when a CFast card, SD card or SSD is inserted or when a USB flash disk is connected. You can override this setting at any time by entering the storage manager and setting a different card as 'active.' It's important to note, however, that ejecting and reinserting cards will revert to the current 'preferred media for recording' setting.

Record RAW on

Recording Blackmagic RAW on two cards lets you record extremely high resolution clips at high frame rates with lower levels of compression. Insert a pair of CFast or SD Cards and choose the '2 cards' option. Since this relies on striping across both cards sequentially, the data rate of the slowest card will be the limiting factor, so you are advised to use two cards of the same or similar specification.

You can also stripe between a CFast card in storage slot 1 or 2 and a USB-C flash disk in storage slot 3. When you use the '2 cards' option, the speed limit is twice the data rate of the slowest card in the striped array.

Merging files for Editing

Copy the .BRAW and .BRAW2 files from both memory cards into the same folder on your computer, and DaVinci Resolve will bring them in as a single, merged clip when you import them into your media pool. If the .BRAW and .BRAW2 files are separated, the clips can play independently at half the frame rate. To play back a .BRAW2 file independently, change the file extension from .BRAW2 to .BRAW.

TIP You can use the Media Management tool in DaVinci Resolve to combine a .BRAW and .BRAW2 file into a single, independent clip.

Combining .BRAW files heps to make sure they can't be separated. This can be useful for media management or if you are sending files to another editor.

For more information, refer to the 'Using Media management' section in the DaVinci Resolve manual.

Record Settings 3

The third page of the 'record' settings tab contains the following settings.

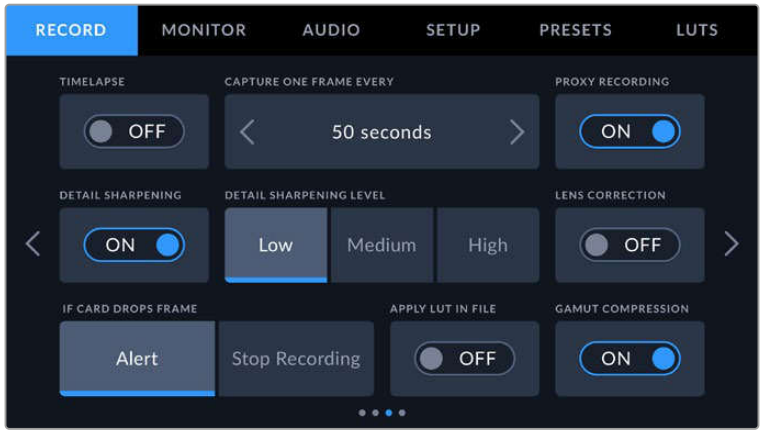

Proxy Recording

This setting is set to 'on' by default so your camera records proxy files simultaneously while recording Blackmagic RAW or ProRes clips. If you want to record clips without proxies you can easily turn the feature off by tapping on the toggle switch and setting the feature to 'off'.

Timelapse

This setting activates the time lapse feature to automatically record a still frame at the following intervals:

Frames	2 – 10
Seconds	1 – 10, 20, 30, 40, 50
Minutes	1 – 10

For example, you can set the camera to record a still frame every 10 frames, 5 seconds, 30 seconds, 5 minutes etc.

The time lapse feature offers many creative options. For example, setting a 2 frame time lapse interval will give your recorded video a high speed effect when played back.

The format of each still frame is based on your recording format, so if you set the camera to record Ultra HD using ProRes HQ, the time lapse setting will maintain this format. The frame rate will be based on your project frame rate. This is so your time lapse footage can be easily incorporated into your post production workflow.

When you record footage in timelapse mode, the timecode counter updates when a frame of video is recorded.

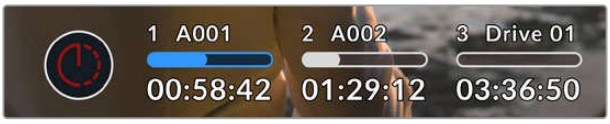

Your URSA Broadcast G2 will indicate it is in time lapse mode with an icon over the 'record' button

Lens Correction

Broadcast zoom lenses can often suffer from color fringing at the edge of frame or near the corners of the image. This is more prominent in high contrast image areas on more affordable B4 lenses, particularly those with more extreme zoom ranges. The Lens Correction feature allows you to correct for this in-camera on URSA Broadcast G2 with broadcast B4 and broadcast PL lenses. It is switched on by default when the camera detects necessary information from the broadcast lens.

Detail Sharpening

Use this setting to sharpen your URSA Broadcast G2's image. When sharpening is enabled, decrease or increase the level of sharpening by selecting 'low', 'medium' or 'high'.

When sharpening is enabled, it will be applied to ProRes video recorded on camera as well as your URSA Broadcast G2's SDI output.

This setting is intended for live studio production where there is no time for post production and you want to output the image live to air. If you are doing extensive image manipulation and color correction in post production then we recommend leaving detail sharpening 'off'. For this reason sharpening is not applied to Blackmagic RAW files that are intended for significant post processing.

TIP When post processing your Blackmagic RAW files, you can achieve a comparable level of sharpening to these settings by using the blur/sharpening tool in DaVinci Resolve's 'color' page.

Set the tool to a radius of 0.48 and adjust the scaling to 0.6, 0.3 or 0.15 for comparable sharpening to 'high,' 'medium,' or 'low.'

For detailed information on sharpening in post production, see the 'motion effects and blur palettes' section in the full DaVinci Resolve manual.

If Card Drops Frame

Use this setting to configure your URSA Broadcast G2's behavior when dropped frames are detected. When set to 'alert' the dropped frame indicator will be displayed on the LCD touchscreen, and recording will continue with dropped frames. When set to 'stop recording' your camera will stop recording when dropped frames are detected. This can prevent you wasting time shooting unusable footage if you don't spot the dropped frames indicator.

Refer to the 'Choosing a CFast 2.0 card', 'Choosing a fast SD card', 'Choosing a fast SSD' and 'Choosing a fast USB-C flash disk' sections for more information on how to avoid dropping frames.

Apply LUT in File

If you are applying a LUT to any of the outputs from your URSA Broadcast G2, the selected LUT will be embedded into the Blackmagic RAW file you are recording.

This means that the LUT will be saved in the header of the file and can easily be applied to the clip in post production without needing to handle a separate file. When the 'Apply LUT in file' switch is set to 'on' in URSA Broadcast G2's record menu, this clip will open in Blackmagic RAW Player and DaVinci Resolve with the chosen LUT already applied to it. The LUT can then be easily toggled 'on' or 'off' but will always travel with the Blackmagic RAW file as it is written into the clip itself.

DaVinci Resolve also has an 'Apply LUT' switch in the RAW settings palette for enabling or disabling the 3D LUT in the Blackmagic RAW file. The 'Apply LUT' setting in DaVinci Resolve is the same setting as in the camera. This means that when shooting you can direct the colorist to use the LUT by setting it in the camera, but they can switch it off easily in DaVinci Resolve by setting 'Apply LUT' to 'off'.

Record LUT to Clip

The 'record LUT to clip' option is available when shooting with ProRes, H.265 or H.264 video codecs. Your Blackmagic URSA Broadcast G2 does not apply, or 'bake in,' LUTs by default to recorded footage, however you can choose to 'bake in' the LUT to your footage by tapping the 'record LUT to clip' switch icon.

This can be a useful option for situations where you do not have the time to grade your footage in post-production, or where you need to give the footage directly to a client or an editor. For more information, refer to the '3D LUTs' and 'touchscreen controls' sections.

Gamut Compression

The 'gamut compression' setting on your URSA Broadcast G2 is enabled by default and allows you to choose whether you want to compress and desaturate extreme colored highlights to stay within the display color space as they approach clipping.

This setting will affect the image sent from SDI outputs, sent in your stream and also your recorded files. When shooting using Apple ProRes or H.264 and H.265 codecs, the 'gamut compression' setting will be permanently recorded into the image. When shooting Blackmagic RAW the 'gamut compression' setting is able to be adjusted in the RAW decode tab in the color page of DaVinci Resolve.

Turning this setting 'off' will allow colors to clip in a more saturated manner but can cause some color fringing from strong saturated monochromatic light sources like LEDs in some extreme cases.

Record Settings 4

The fourth page of the 'record' tab contains settings for your camera's pre-record feature. Pre-record lets you continuosly record video for a set duration prior to pressing the record button. For example, if the pre-record duration is set to 10 seconds, your camera will record to your media, then when you press record the clip will start from 10 seconds prior to when you pressed record. This helpful feature lets you make sure you don't miss an important moment, such as during a news event or when shooting wildlife cinematography.

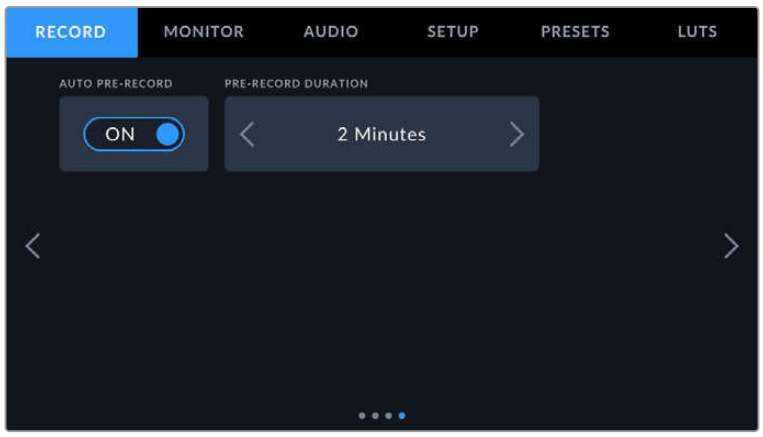

There are different ways to turn pre-record on. You can set the camera to use pre-record on a clip by clip basis, or turn the feature on so the camera is always recording.

Clip by Clip Pre-record

Hold the record button down for 2 seconds. You will notice an extra detail on the touchscreen above the record icon displaying a flashing mini record icon and a small duration counter increasing until it reaches the set pre-record duration. This means the camera is now in pre-record mode and is filling its pre-record cache to your media. If you start record at this point the clip will include the pre-record duration shown that preceded the start of the clip.

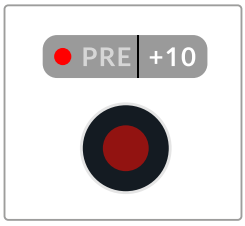

It's important to mention when using pre-record clip by clip, the feature will turn off after you finish recording a clip. To enable pre-record again, hold down any of your camera's record buttons for 2 seconds. If you want to turn pre-record off at any point, simply hold down the record button again for 2 seconds. The second mode of operation for pre-record is 'auto pre-record' which can be turned on in the record menu.

NOTE Any function buttons assigned as record buttons, including your camera, or accessories like Blackmagic Zoom Demand or lenses with buttons assigned as record buttons will follow the same function. Simply hold the button down for 2 seconds to start pre-record. Just remember to press the record button when you want the clip to start as you normally would!

Auto Pre-record

Enable this setting if you want to make sure pre-record is always on. This means even after pressing record at the end of a clip, your camera will still keep recording at the set pre-record duration, ready for the next one. It's important to note when pre-record is set to auto, your camera will be recording all the time. It's worth keeping this in mind with regards to wear on your media. Once enabled, auto pre-record can be turned off at any time by holding the record button down for 2 seconds.

Pre-record Duration

Set the duration of the pre-record. The duration can be set from 5 seconds to 10 minutes. Tap on the left and right arrows to make your selection. The following durations are available:

Seconds	Minutes
5 seconds	1 minute
10 seconds	2 minutes
20 seconds	5 minutes
30 seconds	10 minutes

File Naming Convention

Clips are recorded in the Blackmagic RAW format, Apple ProRes and MP4 formats, depending upon which recording format you have chosen.

The table below shows an example of the file naming convention:

A001_08151512_C001.mov	**QuickTime Movie Filename**
A001_08151512_C001.mov	**Camera index**
A**001**_08151512_C001.mov	**Reel Number**
A001_**08**151512_C001.mov	**Month**
A001_08**15**1512_C001.mov	**Day**
A001_0815**15**12_C001.mov	**Hour**
A001_081515**12**_C001.mov	**Minute**
A001_08151512_**C001**.mov	**Clip Number**

Still image files captured in DNG format using the still button will follow the file naming convention for video clips, however the filename will have an 'S001' representing the 'still number' as the last four digits of the filename in place of the clip number. For more information, refer to the 'Status LCD Controls' section in this manual.

Monitor Settings

The ‘monitor’ tab lets you adjust status text, overlays, and other monitoring options for your URSA Broadcast G2’s LCD touchscreen, front and main SDI outputs. Options are arranged by output between ‘LCD’, ‘front SDI’ and ‘main SDI’. Each of these menus have five pages of options, which you can cycle through by tapping the arrows at the edge of your camera’s touch screen, or swiping left or right.

Monitor Settings 1

The first page of the ‘LCD,’ ‘front SDI,’ and ‘main SDI,’ monitor tab contains identical settings for each output. For example, you can set ‘zebra’ on for the LCD touchscreen, but off for the front or main SDI outputs.

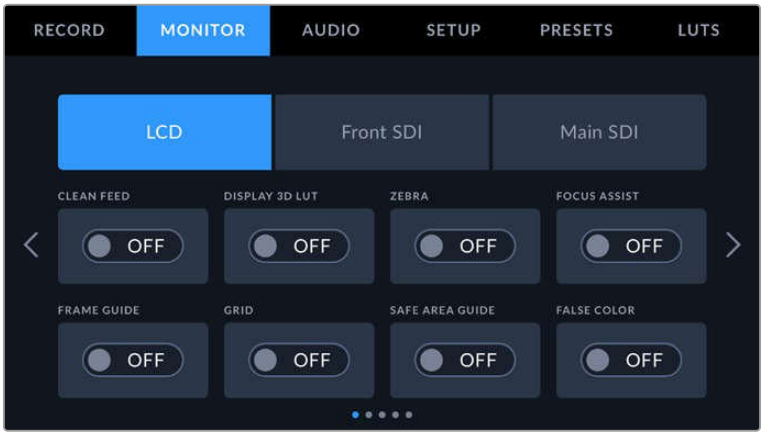

Clean Feed

Tap the ‘clean feed’ switch in the ‘LCD,’ ‘front SDI’ and ‘main SDI’ menus to disable all status text and overlays for that output, except the record tally indicator.

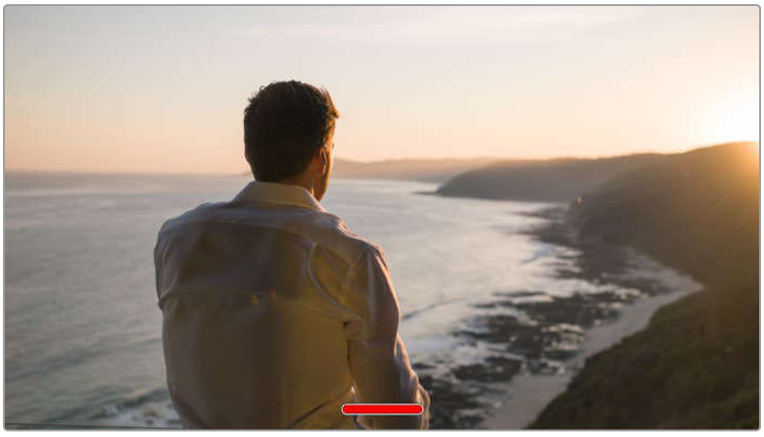

Your URSA Broadcast G2 LCD touchscreen will still display a record tally in clean feed mode

NOTE LUTs will still be applied to outputs with ‘clean feed’ enabled. To disable LUTs, disable the ‘display LUT’ switch in the ‘Monitor’ menu for that output.

Display 3D LUT

Your URSA Broadcast G2 can apply 3D LUTs to any output to approximate the look of color graded footage. This is especially useful when shooting with 'film' dynamic range as it can produce an intentionally 'flat' low contrast image.

If your URSA Broadcast G2 has a 3D LUT active, use this setting to independently apply that LUT to your LCD touchscreen, front or main SDI output.

> **NOTE** For more information on loading and using 3D LUTs, see the 'LUTS' section of this manual.

Zebra

Tap the 'zebra' switch in the 'LCD,' 'front SDI' and 'main SDI' menus to enable zebra guides for those outputs. For more information on zebra guides and setting zebra levels, see the 'touchscreen features' section in this manual.

Focus Assist

Tap the 'focus assist' switch in the 'LCD,' 'front SDI' and 'main SDI' menus to enable focus assist for those outputs. For more information on focus assist and setting focus assist levels, see the 'touchscreen features' section in this manual.

Frame Guide

Tap the 'frame guide' switch in the 'LCD,' 'front SDI' and 'main SDI' menus to enable frame guides for those outputs. For more information on frame guides and choosing different guides, see the 'touchscreen features' section in this manual.

Grid

Tap the 'grid' switch in the 'LCD,' 'front SDI' and 'main SDI' menus to enable a rule of thirds grid for those outputs. For more information on the rule of thirds grid, see the 'touchscreen features' section in this manual.

Safe Area Guide

Tap the 'safe area' switch in the 'LCD,' 'front SDI' and 'main SDI' menus to enable safe area overlay for those outputs.

For more information on safe area guides, and setting the level of safe area guides, see the 'touchscreen features' section in this manual.

False Color

Tap the 'false color' switch in the 'LCD,' 'front SDI' and 'main SDI' menus to enable false color exposure assistance for those outputs.

For more information on false color, see the 'touchscreen features' section in this manual.

Monitor Settings 2

The second page of your URSA Broadcast G2's 'LCD' monitor tab contains some settings that vary depending on the selected output.

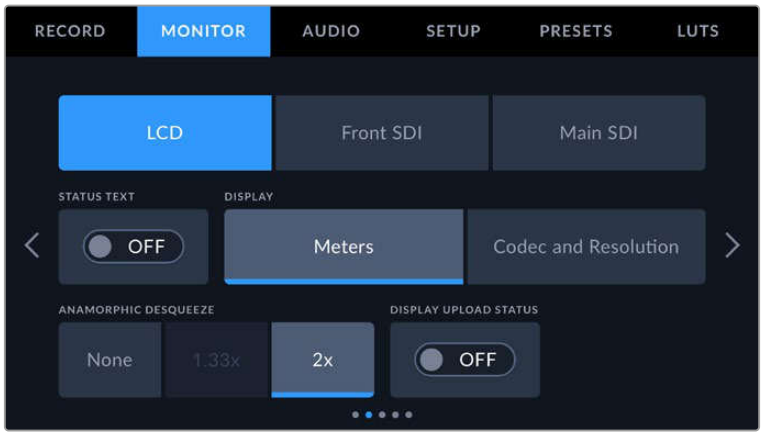

LCD, Front SDI and Main SDI

Status Text

It can be useful to hide the status text and meters on your LCD, front SDI or main SDI output, leaving only the information necessary to compose or direct a shot. Tap the 'status text' switch icon in the LCD, 'front SDI' or 'main SDI' monitor menus to toggle the appearance of status text and meters for that output. Overlays such as frame guides, grids, focus assist and zebra will remain visible, if enabled.

Swiping up or down on your URSA Broadcast G2's LCD touchscreen has the same effect for the touchscreen.

Anamorphic Desqueeze

When shooting with anamorphic lenses, the image will appear horizontally 'squeezed' on your URSA Broadcast G2's preview outputs and in recorded files. Enabling 'anamorphic desqueeze' will correct the preview image on your URSA Broadcast G2 as well as recording the desqueeze amount used in the clip metadata for easy correction in post.

The desqueeze amount you choose will vary depending on what you've set your URSA Broadcast G2 resolution to, but the resulting image will always be in the cinematic widescreen 2.4:1 aspect ratio.

Anamorphic lenses designed for film typically have a 2x squeeze factor. Your URSA Broadcast G2's '3.7K anamorphic' resolution is designed for use with these lenses and will perform a 2x desqueeze when set to this resolution with 'anamorphic desqueeze' set to '2x'.

Anamorphic lenses designed for 16:9 digital image sensors often use a 1.33x squeeze factor to produce 2.4:1 cinematic widescreen images from the entire 16:9 sensor. Therefore, when your URSA Broadcast G2 is set to 16:9 resolutions such as '4K 16:9' and 'HD 16:9,' 'anamorphic desqueeze' should be set to '1.33x'.

TIP If your image appears horizontally stretched when shooting with a standard spherical lens, make sure you don't have 'anamorphic desqueeze' enabled.

LCD Only

Display

Instead of a histogram and audio meters, your URSA Broadcast G2 can display codec and resolution information at the left and right bottom edges of the LCD touchscreen. This can be useful if you prefer to use false color for dialing in exposure, or are recording audio separately and want to display additional information in the space normally used by the histogram and audio meter. Simply tap 'meters' or 'codec and resolution' in the 'LCD' menu to select your preferred view.

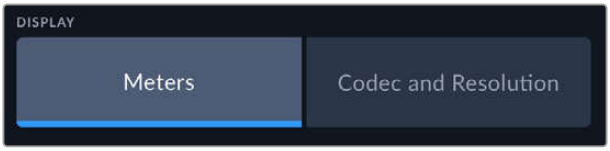

Front SDI and Main SDI

Display Status Text For Cinematographer or Director

The LCD touchscreen displays information such as ISO, white balance, and aperture that is useful to a camera operator or cinematographer setting up individual shots on that camera. Your camera's SDI output, however, can also show information useful to a director or script supervisor who is keeping track of multiple shots or cameras.

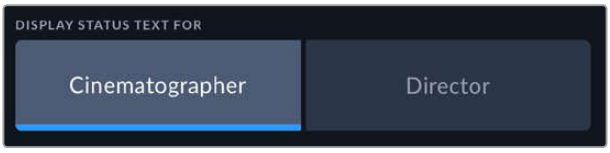

Setting the status text to 'director' in your URSA Broadcast G2's 'front SDI' or 'main SDI' monitor settings changes the status text for that output to show the following information.

- **FPS**
  Displays the currently selected frames per second. If off speed frame rate is disabled, only the project frame rate will be shown. If an off speed frame rate is being used, the sensor frame rate will be shown, followed by the project frame rate.
- **CAM**
  Displays the camera index as set in your URSA Broadcast G2's Slate. See the 'slate' section in this manual for more information.
- **OPERATOR**
  Identifies the camera operator as set in your URSA Broadcast G2's Slate. See the 'slate' section in this manual for more information.
- **DURATION DISPLAY**
  Displays the duration of the current clip, while recording, or the last recorded clip in the following format: hours:minutes:seconds
- **REEL, SCENE, TAKE**
  Displays the current reel, scene and take. For more information on reels, scenes, takes and their labelling conventions, refer to the 'slate' section in this manual.
- **DYNAMIC RANGE**
  The bottom left hand corner of the monitor displays your URSA Broadcast G2's currently applied LUT, if applied to that output. If no LUT is applied, 'film' or 'video' dynamic range will be displayed.
- **TIMECODE**
  The bottom right of the monitor displays your URSA Broadcast G2's timecode, in the following format: hours:minutes:seconds:frames.

Monitor Settings 3

The third page of the 'LCD', 'front SDI' and 'main SDI' monitor tab contains identical settings for each output. These settings act globally across all three monitoring outputs. For example, if focus assist is enabled on your Blackmagic URSA G2's LCD, Front SDI and Main SDI outputs changing the 'focus assist type' from 'peaking' to 'colored lines' will effect all three outputs.

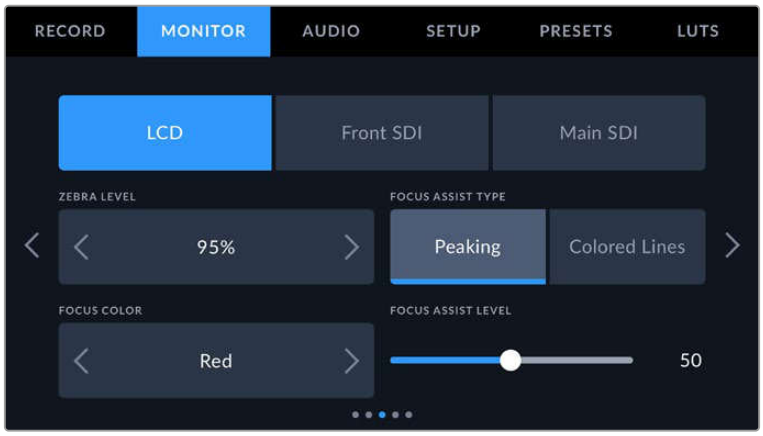

Zebra Level

Set the exposure level that zebra appears at by tapping the arrow icons on either side of this setting. There are eight zebra level presets available, from middle gray through to 100 percent exposure.

For more information, see the 'zebra' guide in the 'touchscreen features' section of this manual.

Focus Assist Type

Your URSA Broadcast G2 camera has two focus assist modes, 'peaking' and 'colored lines.'

- **Peaking**
  When 'peaking' style focus assist is selected, areas of the shot that are in focus are heavily sharpened on your LCD touchscreen or SDI outputs, but not in the recorded image itself. This causes focused parts of your shot to 'pop' out of the softer background on screen. As no additional overlays are used, this can be a very intuitive way to tell when focus is dialed in, especially when the subject you're focusing on is physically well separated from other elements in shot.
- **Colored Lines**
  When 'colored lines' style focus assist is selected, a colored line is superimposed around the parts of the image that are in focus. This can be a little more intrusive than 'peaking' style focus assistance as the lines are drawn over your image, but especially in busy shots with a lot of visible elements, it can be a precise focus aid.

Focus Color

Use this setting to change the color of focus line overlays when using 'colored lines' style focus assistance. Changing the focus line color can make it easier to tell focus assistance lines apart from your image. The available options are 'white,' 'red,' 'green,' 'blue' and 'black.'

Focus Assist Level

To set the level of focus assistance for your LCD touchscreen, front SDI or main SDI, move the slider from left to right.

TIP The optimum level of focus assistance varies shot by shot. When focusing on actors, for example, a higher level of focus assistance can help resolve edge detail in faces. A shot of foliage or brickwork, on the other hand, may show distracting amounts focus information at higher settings.

Monitor Settings 4

The fourth page of the 'LCD', 'front SDI' and 'main SDI' monitor tab contains identical settings for each output. These settings act globally across all three of your camera's monitor outputs.

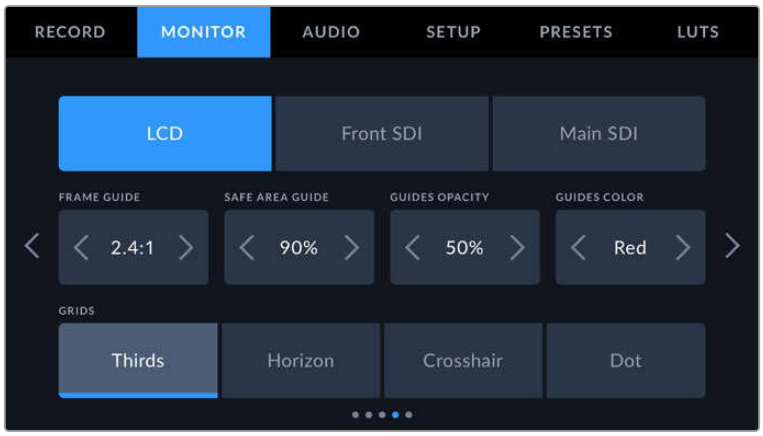

Frame Guides

Tap the left or right arrows in the 'frame guides' menu setting to cycle through frame guide options for all outputs on your URSA Broadcast G2, including EVFs such as Blackmagic URSA Viewfinder. The options are detailed in the 'touchscreen features' section of this manual, and are also accessible from the LCD monitoring menu in your LCD touchscreen head up display.

Safe Area Guide

To adjust the size of the safe area overlay on your URSA Mini's LCD touchscreen, front SDI and main SDI outputs, tap the arrows to the left and right of the percentage displayed in this setting. This percentage indicates the size of the safe area in relation to the image frame. Most broadcasters require a 90% safe area.

Guide Opacity

Tap the left or right arrows in the 'guide opacity' menu setting to choose the opacity of the areas blocked out by frame guides on your LCD touchscreen, front and main SDI outputs. The options are 25%, 50%, 75% and 100%.

Guides Color

Tap the left or right arrows in the 'guides color' menu setting to choose a color for the guides.

Grids

To set which combination of grids and crosshairs you want to display on your URSA Broadcast G2's LCD touchscreen, front and main SDI outputs, tap the 'thirds', 'horizon' 'crosshairs,' or 'dot' options in this setting.

For more information, see the 'grids' guide in the 'touchscreen features' section earlier in this manual.

Monitor Settings 5

The fifth page of your URSA Broadcast G2's 'LCD' monitor tab contains some settings that vary depending on the selected output.

LCD only

LCD Brightness

Drag the 'LCD brightness' slider left or right to adjust the brightness of your URSA Broadcast G2's LCD touchscreen.

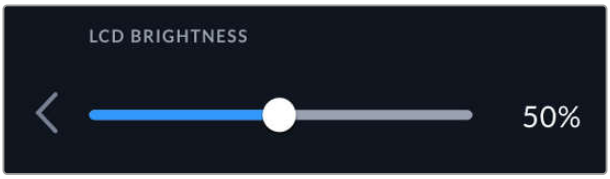

Front SDI and Main SDI

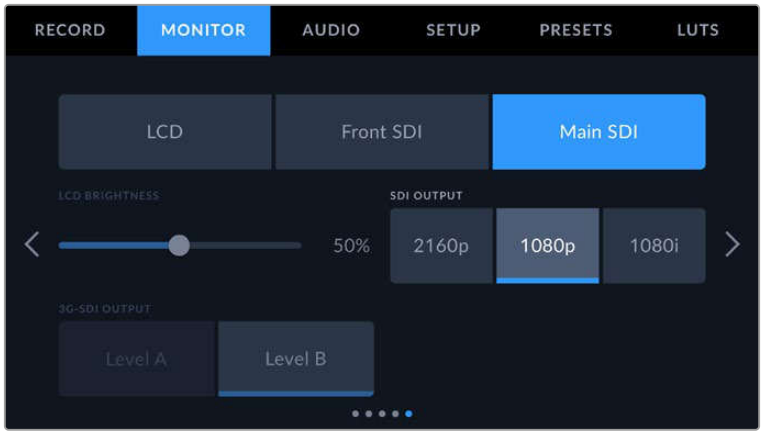

SDI Output

Both outputs allow you to choose between progressive and interlaced HD output or progressive Ultra HD. The options available in this setting depend on your camera's resolution and frame rate settings. Progressive HD, or '1080p' is always available regardless of your recording resolution and frame rate, while interlaced HD, or '1080i' is available when your project frame rate is set to 50, 59.94 or 60. Ultra HD SDI output, or '2160p' is available when shooting at Ultra HD resolutions.

3G-SDI Output

You can change the 3G-SDI output standard to maintain compatibility with equipment that can only receive level A or level B 3G-SDI video. This option will only appear when you are operating in 50, 59.94 or 60 frames per second and outputting 1080p. Tap the 'Level A' or 'Level B' icon to select each standard.

Audio Settings

The 'audio' tab lets you adjust the audio input and monitoring settings on your URSA Broadcast G2. These settings are spread over two pages and divided between channels 1 to 4.

You can map each audio channel to a different source, as well as adjusting various settings such as padding and low cut filters.

These settings work together with the switches on your URSA Broadcast G2's internal control panel. So after you've set your audio source for a particular channel, you can use the internal control panel switches to set the signal type and whether phantom power is enabled for that channel.

Audio Settings 1

The first page of your URSA Broadcast G2's 'audio' tab contains the following settings.

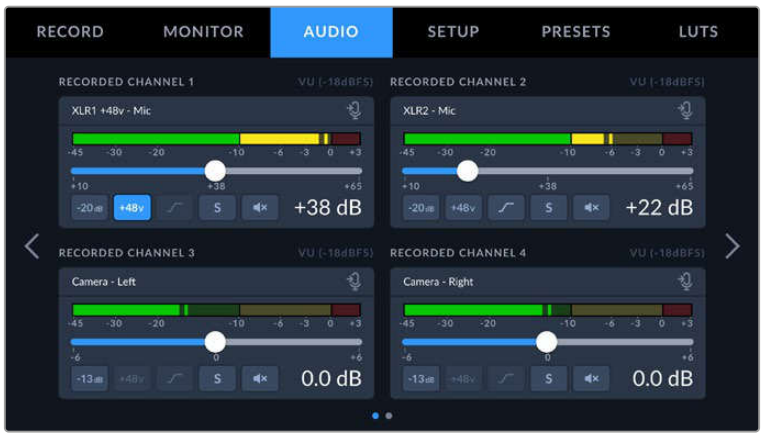

Channel Source

Tap on the channel source icon for a specific channel to open the channel source selector, then tap on the left and right arrows to move through the options. The options available are:

- **Camera Left or Right**
  Use this setting to record from your camera's internal microphones.
- **Camera Mono**
  Use this setting to record audio from your URSA Broadcast G2's built in microphone's left and right channels onto a single audio channel.
- **XLR Mic, XLR Line, XLR AES**
  Use this setting to record from your camera's XLR inputs. Depending on which audio signal you've set on your URSA Broadcast G2's internal control panel switches, your XLR input may be listed as 'mic,' 'line,' or 'AES.' If phantom power is enabled and you have your XLR input set to 'mic' you'll also see a '+48V' indicator here. It it is important to ensure that the +48V switch gets turned 'off' when you disconnect your phantom powered microphone.
- **XLR 1 or 2 Mic Backup**
  Use this setting to record audio from a microphone plugged into your URSA Broadcast G2 XLR 1 or 2 input at a lower level than the standard 'mic' recording. This can be used to avoid audio clipping in the event of an unexpected increase in loudness. This feature will only be available as a selectable item if the XLR 1 or 2 input switch on the camera's internal control panel is set to 'mic'.
- **None**
  Use this setting to disable your audio channel.

Channel 1, 2, 3 and 4 Level Sliders

Use these sliders to adjust the recording levels of your chosen channel's signal sources. Audio meters are included with each slider to help you set the correct audio level. These levels will also update when you adjust the audio using the audio knobs on the ergonomic control panel.

To achieve optimum audio quality, ensure your audio levels do not reach 0 dBFS. This is the maximum level that your camera can record, meaning that any audio that exceeds this level will be clipped, resulting in distortion.

Drag the level sliders for each channel right or left to increase or decrease their audio signal strength

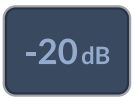

Pad XLR -20dB

The -20dB pad option within each channel setting gives you added control to further reduce the input gain levels on your URSA Broadcast G2's XLR audio inputs when shooting in a loud environment even after your input levels are already turned down. Tap on the -20dB icon to enable. Tap again to disable.

+48 Volt Phantom Power

This indicator displays as enabled when the 48v phantom power switch on your camera's internal control panel has been set to on. The indicator will appear disabled when phantom power is turned off.

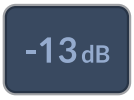

Pad Cam Mic -13dB

The -13dB pad option gives you added control to further reduce the microphone input gain levels on your URSA Broadcast G2's internal microphone when shooting in a loud environment even after your input levels are already turned down.

Cam Mic Low Cut Filter

Tap this icon to enable the low cut filter for your camera's internal microphones. This filter helps to reduce potential wind noise or low frequency rumbling that may occur in exterior shooting conditions. Note that the 'pad cam mic -13dB' selector must be switched off for this function to work.

Solo

Tap the solo icon to isolate the corresponding audio channel on the headphones output. Solo will mute all other audio channels and only allow the desired channel to be heard. Tap again to turn solo off.

Mute

Tap the mute icon to silence the corresponding audio channel on the headphones output. Tap again to disable mute and make the channel audible again.

TIP The solo and mute features are only applied to the headphones output for audio monitoring purposes and do not affect the recorded audio.

Audio Settings 2

The second page of your URSA Broadcast G2's 'Audio' tab contains the following settings.

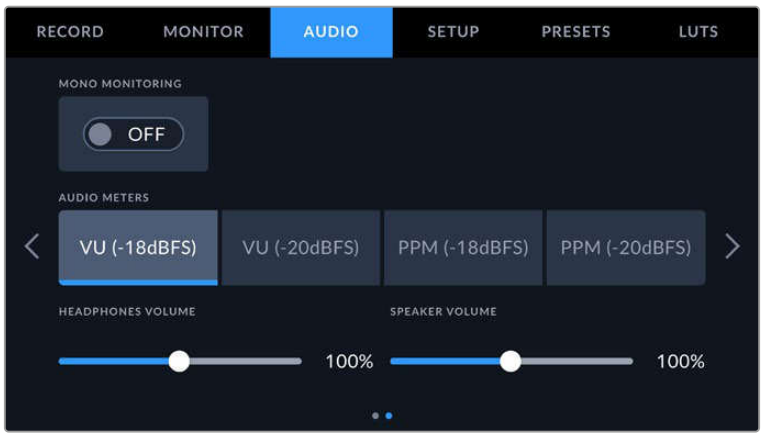

Mono Monitoring

When mono monitoring is enabled, all audio channels are mixed down to a single mono headphones output and audible on both left and right channels of your headphones. This means even if you are wearing a headset with only one ear cup, you can still monitor all your audio source signals.

Audio Meters

You can choose from two different audio meter display types.

VU	The VU meter, or 'volume units' meter, averages out short peaks and troughs in your audio signal. If you are using VU metering, adjust the input levels on you Blackmagic URSA Broadcast G2 so that the meter peaks at the 0db indicator on the audio meter. This maximizes the signal to noise ratio and ensures your audio is at the highest quality. If your audio peaks beyond the 0dB indicator there is a high risk of sound distortion.
PPM	PPM meters, or 'peak program meters' displays a 'peak hold' feature that momentarily holds the signal peaks and a slow fall back so you can easily see where your audio is peaking.

Both VU and PPM meters are available at reference levels of -18dBFS or -20dBFS so you can monitor your audio to suit different international broadcasting standards.

Audio meter setting	Standard
PPM (-20 dBFS)	SMPTE RP.0155
PPM (-18 dBFS)	EBU R.68

Headphone Level

This slider adjusts the output levels for headphones attached to URSA Broadcast G2's 3.5mm headphone jack. Move the audio slider left or right to adjust levels. These levels will also update when you adjust the headphone volume using the settings wheel on the forward control panel.

Speaker Level

This slider adjusts the output levels for your URSA Broadcast G2's built in speaker. Move the audio slider left or right to adjust levels. These levels will also update when you adjust the speaker volume using the settings wheel on the forward control panel.

Setup Settings

The 'setup' tab contains your URSA Broadcast G2's identification settings, software version, function button settings and other camera settings not directly linked to recording or monitoring. This menu has twelve pages, which you can cycle through by tapping the arrows at the edge of the LCD touchscreen, or swiping left or right.

Setup Settings Page 1

The first page of your URSA Broadcast G2's 'setup' tab contains the following settings.

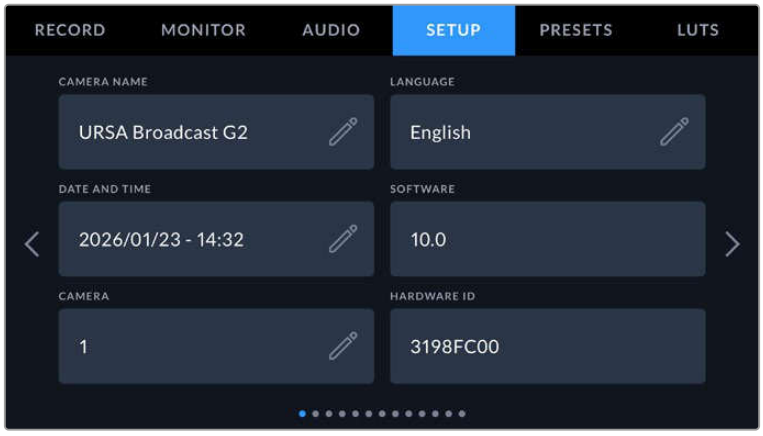

Setup menu on URSA Broadcast G2

Name

When you first set up your URSA Broadcast G2 it's important to give your camera a unique name. If you are using more than one camera, this lets you easily identify it on a network and when changing settings using the Blackmagic Camera Setup utility.

To change the name:

1. Tap on the edit icon to open the text editor.
2. Tap the circled cross to delete the current name and type in a new name using the alpha numeric keyboard.
3. Tap 'update' to save the new name.

Language

URSA Broadcast G2 supports 13 popular languages including English, Chinese, Japanese, Korean, Spanish, German, French, Russian, Italian, Portuguese, Turkish, Polish and Ukrainian.

The language page will also appear on initial start up.

To select your language:

1. Tap the pencil icon and select your language from the list.
2. Select 'update' to return to the setup menu.

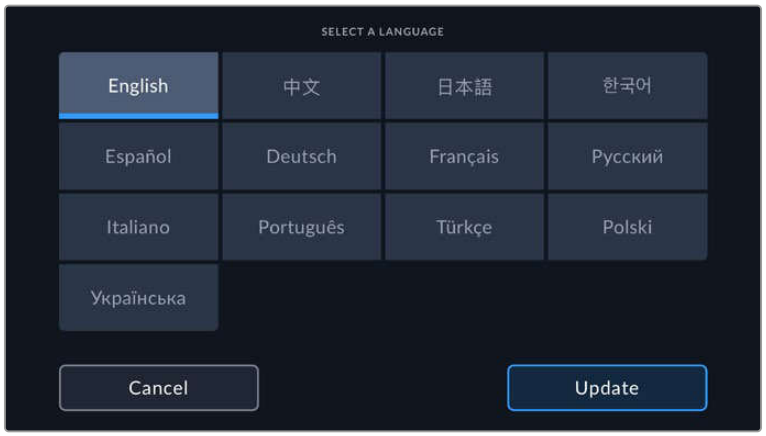

Date and Time

Set your camera's date and time by tapping the 'date and time' setting. The date format is year, month, day and the time format is 24 hour. Date and time are also used for time of day timecode if an external timecode source is not connected. The date and time can be set manually by entering your own date, time and time zone, or you can set your camera to set it automatically.

When setting manually, tap on each field to enter the time and date and tap 'update' to confirm.

When set to 'automatically', your URSA Broadcast G2 will update the date and time when connected to a network via Ethernet, or the next time you update your camera. The camera's default network time protocol server is time.cloudflare.com but you can set it yourself by tapping the 'time protocol' edit icon and entering your own NTP server. After entering the NTP server tap 'update' to confirm.

Setting the date and time correctly ensures your recorded clips have the same time and date information as your network and also prevents conflicts that can occur with some network storage systems.

Software

Displays the version number of the currently installed software. See the 'Blackmagic Camera Setup Utility' section for more information on updating software.

Camera

The camera setting sets the alpha numeric prefix at the start of a clip's filename when recording to external media. To edit the prefix, tap on the edit icon and replace it with a new one. Tap 'update' to apply. When your camera is connected to ATEM Mini via HDMI, the prefix is set automatically to ensure all clips share the same prefix and each camera is uniquely identified in a multi camera setup.

Hardware ID

The 'hardware ID' indicator displays an 8 character identifier for your Blackmagic URSA Broadcast G2. This is unique to each camera. A longer, 32 character version of this ID is also included in the metadata for Blackmagic RAW. This can be useful for identifying which footage came from a particular camera.

Setup Settings Page 2

The second page of your URSA Broadcast G2's 'setup' tab contains the following settings.

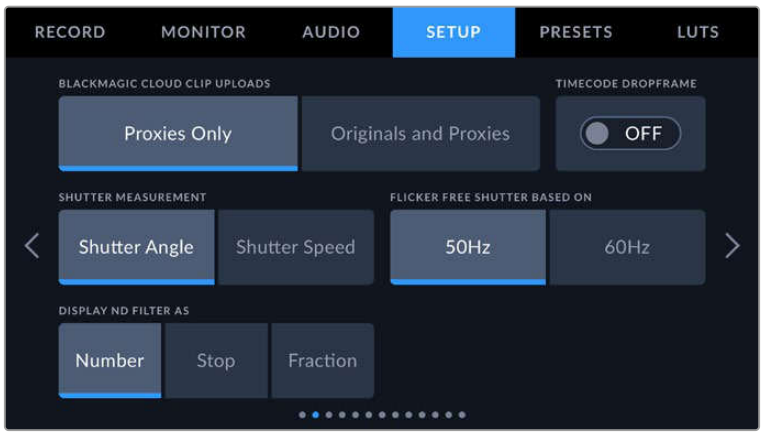

Blackmagic Cloud Clip Uploads

These settings let you choose which files are uploaded to Blackmagic Cloud when you are signed into your account. When 'proxies only' is selected, only the proxy files from your camera are uploaded, when 'originals and proxies' is selected both original camera files and proxy files are uploaded.

Drop Frame Timecode

Use the 'drop frame timecode' option to use drop frame timecode when using NTSC project frame rates of 29.97 and 59.94. Drop frame timecode drops a small number of frames from the timecode at set intervals. This keeps your project timecode accurate despite each second not containing a whole number of frames at NTSC frame rates.

Shutter Measurement

Use this setting to select whether to display shutter information as 'shutter angle' or 'shutter speed'. It's important to note that both shutter measurements effect motion blur, but work in slightly different ways. See the 'touchscreen controls' section of this manual for a full explanation of shutter measurement.

Flicker Free Shutter Based On

Use this setting to change the mains power frequency your URSA Broadcast G2 uses to calculate flicker free shutter settings.

When shooting under lights, your shutter speed can effect the visibility of flicker. Your URSA Broadcast G2 will automatically calculate flicker free shutter speeds for your current frame rate and display suggestions in the 'shutter speed' menu. These speeds are effected by the frequency of the local mains power supply used to drive those lights. In most PAL countries, this frequency is 50Hz, while NTSC countries typically use 60Hz power. Simply tap '50Hz' or '60Hz' to set the right frequency for your region.

Characteristics of various light sources may still cause flicker even when using flicker free shutter values. We recommend performing a test shoot when not using continuous lights.

Display ND Filter As

Use this setting to adjust how the ND filter indicator on your URSA Broadcast G2 displays your ND filter setting. Each setting corresponds to a different camera convention. Cinematographers typically use ND.number notation, while those familiar with DSLRs or broadcast cameras may prefer this information in f-stop format, or as a fraction of available light.

These options are available here as 'number,' 'stop,' and 'fraction,' respectively.

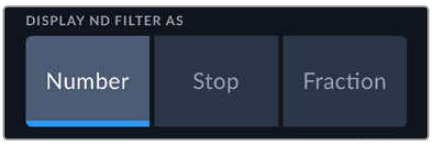

Setup menu in URSA Broadcast G2 with the option to customize how the ND filter information is displayed

Setup Settings Page 3

The third page of your URSA Broadcast G2's 'setup' tab contains the following settings.

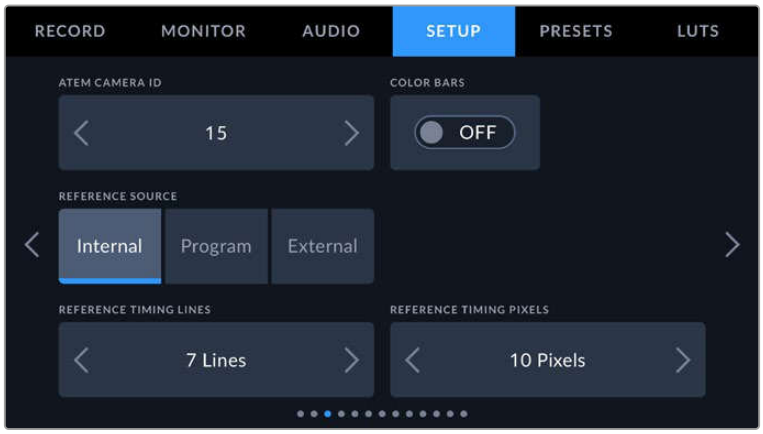

ATEM Camera ID

If you're using URSA Broadcast G2 with an ATEM Switcher and want your camera to receive tally signals from the switcher, you'll need to set the camera number on your camera. This ensures the switcher sends the tally signal to the correct camera. The camera number can be set to a value of 1-99 by tapping the left or right buttons. The default setting is 1.

Color Bars

Outputting color bars rather than a preview image can be useful when connecting your URSA Broadcast G2 to a switcher or external monitor. The appearance of your URSA Broadcast G2's color bars on your switcher or monitor confirms the connection, and you can perform basic monitor calibration based on the colors of the bars. To turn on color bars for all outputs on your URSA Broadcast G2, including the LCD touchscreen, simply tap the 'color bars' switch icon.

Reference Source

This setting is used to select the reference source. Your URSA Broadcast G2 can lock to an internal or external reference source, or to the reference signal in the program input from an ATEM switcher. If you are using your URSA Broadcast G2 with an ATEM Switcher's camera control function, you should always set your reference source to 'program' unless the switcher itself and all connected cameras are set to an external reference.

NOTE When you are setting your reference source for URSA Broadcast G2, you may experience a small dropout on your camera's outputs when switching between your reference sources. This is because the camera is adjusting its referencing timing to match that of the external source. For this reason it is important not to change this setting during a production and only while setting up.

Reference Timing

These settings allow you to manually adjust the reference timing on a line or pixel basis. Simply tap the arrow icons on either side of the "lines" and "pixels" settings to make adjustments.

Setup Settings Page 4

The fourth page of your URSA Broadcast G2's 'setup' tab contains the following settings.

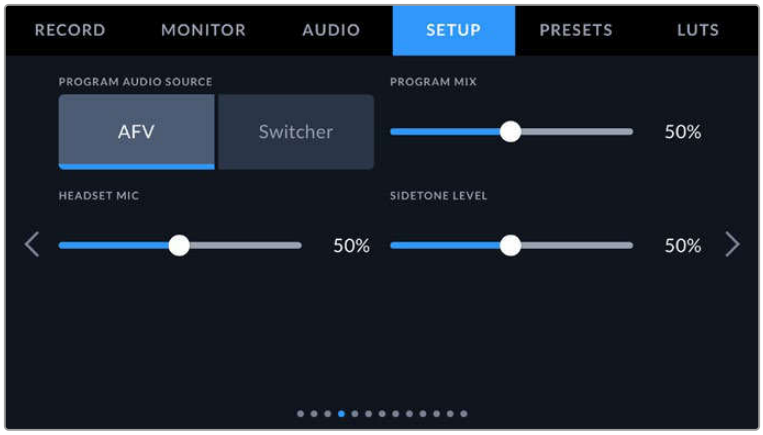

Program Audio Source

When connected to an ATEM switcher, setting 'program audio source' to 'switcher' prioritizes the program return audio as your input source to be mixed with talkback when monitoring using headphones or a headset. This is useful when you are not feeding the switcher audio from your camera but you still want to listen to the program feed from the switcher via the 'SDI in' port. Setting 'program audio source' to 'AFV' prioritizes audio from your camera's internal mics or 'audio in' XLR ports, and is the default setting.

Program Mix

This setting changes the balance of camera sound to talkback sound. The headphones will output audio following what is displayed on the LCD. For instance, if you are in camera view, camera audio is heard. If you are in program view, program audio is heard. The default setting is 100%.

Headset Mic

Move this volume slider left or right to increase or decrease audio microphone input levels. The default setting is 50%.

Sidetone Level

Adjust this slider to set the volume of your own voice mic in your headset.

Setup Settings Page 5

The fifth page of your URSA Broadcast G2's 'setup' tab contains the following settings.

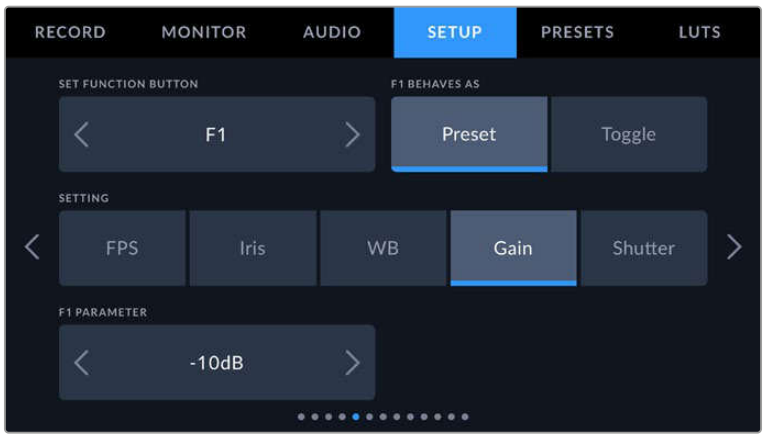

Set Function Button

On the outside of your URSA Broadcast G2's LCD touchscreen, you'll notice two function buttons, 'F1' and 'F2.' These are mappable to frequently used features and are quickly accessible when using your camera with the LCD touchscreen closed, such as when you are using URSA Viewfinder. The default setting for the 'HFR' button is 'off speed rec', though you can assign other functions to it.

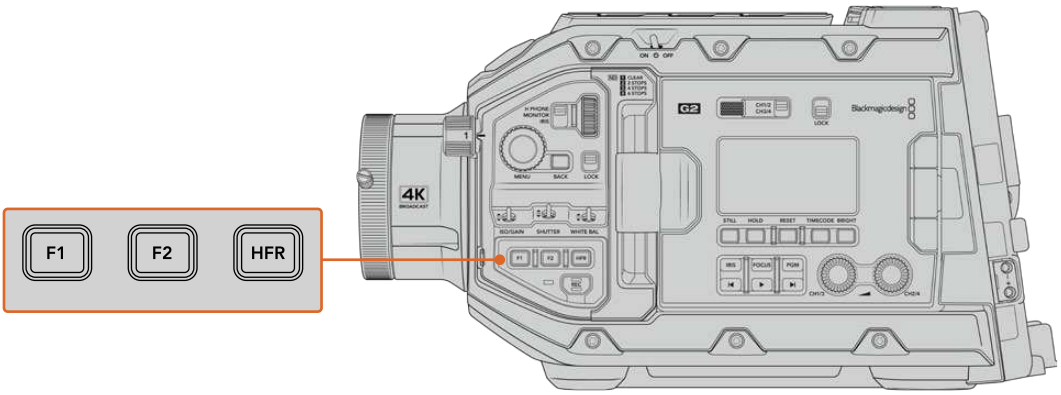

Your URSA Broadcast G2's 'F1', 'F2' and 'HFR' buttons are located on the forward control panel

TIP If your URSA Broadcast G2 has a B4 lens with a lens connector, you can configure the 'vtr' and 'ret' buttons as function buttons and assign preset or toggle functions in addition to the 'F1', 'F2' and 'HFR' buttons.

To set these buttons, use the arrows to select a function button and then its behavior, a setting, and a parameter for that setting.

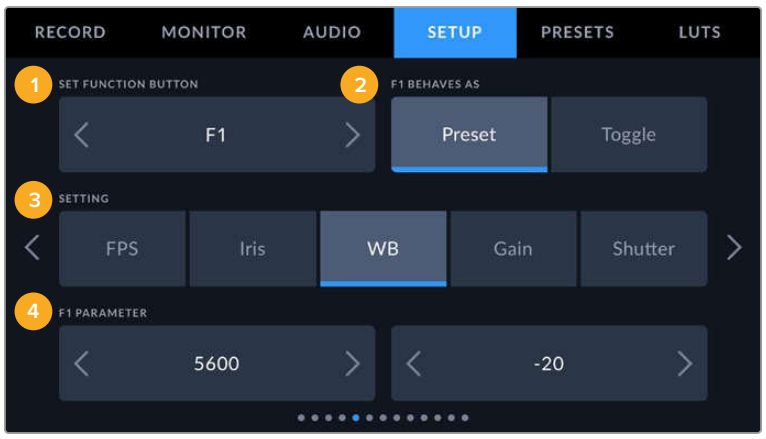

1 Button **2** Behavior **3** Setting **4** Parameter

Function Button Behaves as Preset or Toggle

Once you have selected the function button you want to map, you can select a behavior. The available options are:

- **Preset**
  When set to this behavior, pressing a function button will recall a combination of a setting and a parameter.

  To set a preset, select the setting you want to use from the 'setting' menu, and adjust that setting by tapping the arrow icons on either side of the 'parameter' menu.

  For example, to set the F1 button to recall a preset white balance, use the 'set function button' arrows to select 'F1', select the 'preset' behavior, tap the 'WB' setting, and tap the arrows on either side of the 'parameter' menu until you get to WB '5600K' and Tint '-20'.

- **Toggle**
  When set to this behavior, pressing a function button will toggle a particular setting on or off. The 'setting' menu is grayed out in this mode. Instead, tap the left or right arrows in the parameter menu to scroll through the available options. These are 'clean feed', 'display LUT', 'frame guides', 'focus assist', 'false color', 'zebra', 'grid', 'safe area guide', 'off speed recording', 'record', 'program return', 'color bars', 'push to talk', 'focus zoom' and 'none'.

  When 'focus zoom' is enabled, you can use the menu wheel on the forward control panel to move the region of zoom and adjust the magnification level. Pressing the menu wheel toggles between zoom and magnification adjustment. For information on how to use 'focus zoom' when it is enabled on the LCD, see the 'focus zoom' section.

  Using the 'toggle' behavior also lets you select the output this setting applies to. Simply tap any combination of 'LCD,' 'front SDI' and 'main SDI' to select. If the output for an option is not available, such as 'color bars' which always applies to all outputs, the 'LCD,' 'front SDI', and 'main SDI' settings are disabled.

  For example, you can configure URSA Broadcast G2 to use the 'ret' and 'vtr' buttons on a B4 lens as function buttons. If ISO recording is happening with a HyperDeck, a popular option is to set 'vtr' to act as a 'push to talk' button.

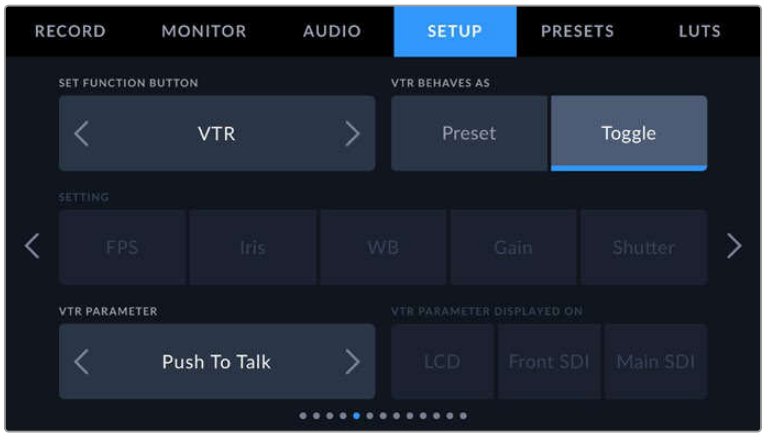

Configuring the 'vtr' button on a B4 lens to function as a 'push to talk' button

Setup Settings Page 6

The sixth page of your URSA Broadcast G2's 'setup' tab contains settings to configure the optional Blackmagic Zoom Demand. These settings are only active when you have Blackmagic Zoom Demand attached to your URSA Broadcast G2.

For more information on attaching and using Blackmagic Zoom Demand with your URSA Broadcast G2, refer to the 'Blackmagic Zoom and Focus Demand' section later in this manual.

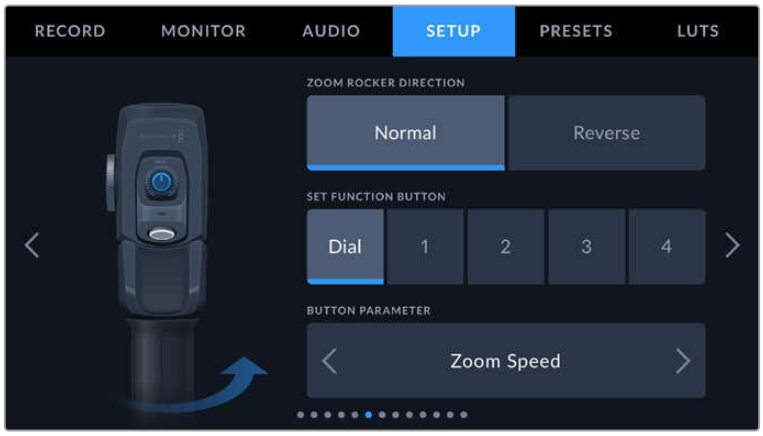

Zoom Rocker Direction

- **Normal**
  The default zoom rocker direction. Push the zoom rocker to the right to zoom in and to the left to zoom out.
- **Reverse**
  When the zoom rocker direction is set to 'reverse' push the zoom rocker to the left to zoom in and to the right to zoom out.

Blackmagic Zoom Demand has four zoom function buttons and a speed dial that you can map to different functions.

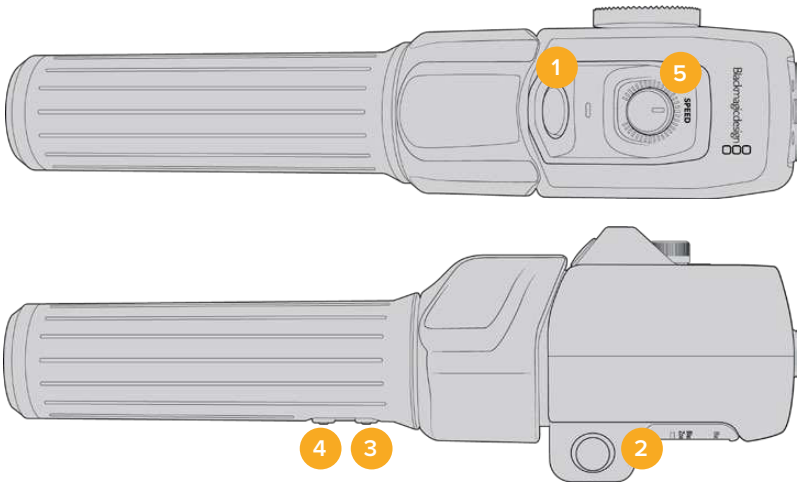

1 Zoom F1 **2** Zoom F2 **3** Zoom F3 **4** Zoom F4 **5** Speed Dial

To assign a different function to the speed dial or one of the zoom buttons choose 'dial' or a button number from the 'set function button' menu. Next, choose a function by tapping the arrow icons on either side of the 'button parameter' menu.

Dial and function button parameter options:

Speed Dial	Zoom speed, headphone level, iris adjustment, focus adjustment.
Zoom buttons 1 – 4	Record, push to talk, program return, focus zoom, frame guides, status text, auto focus, auto iris, auto white balance, playback.

Setup Settings Page 7

The seventh page of your URSA Broadcast G2's 'setup' tab contains settings to configure the optional Blackmagic Focus Demand. These settings are only active when you have Blackmagic Focus Demand attached to your URSA Broadcast G2.

For more information on attaching and using Blackmagic Focus Demand with your URSA Broadcast G2, refer to the 'Blackmagic Zoom and Focus Demand' section later in this manual.

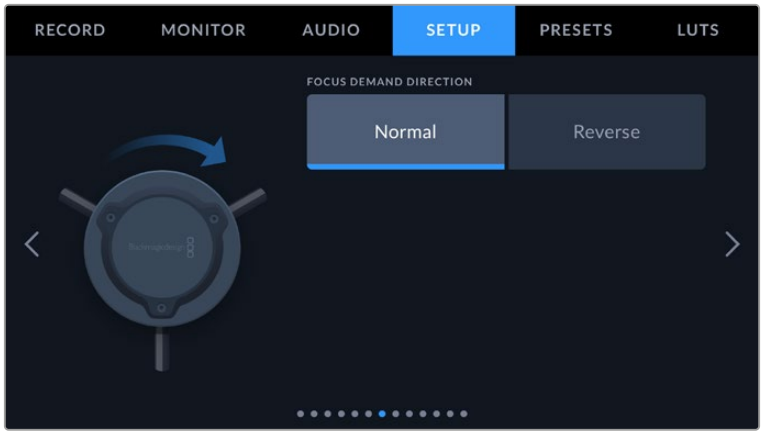

Focus Demand Direction

You can change the direction of the focus wheel on focus demand by selection either 'normal' or 'reverse'.

- **Normal**
  Turn the focus wheel clockwise to focus on subjects closer to the lens and counterclockwise for subjects further away.
- **Reverse**
  Turn the focus wheel counterclockwise to focus on subjects closer to the lens and clockwise for subjects further away.

Setup Settings Page 8

The eighth page of your URSA Broadcast G2's 'setup' tab contains the following settings.

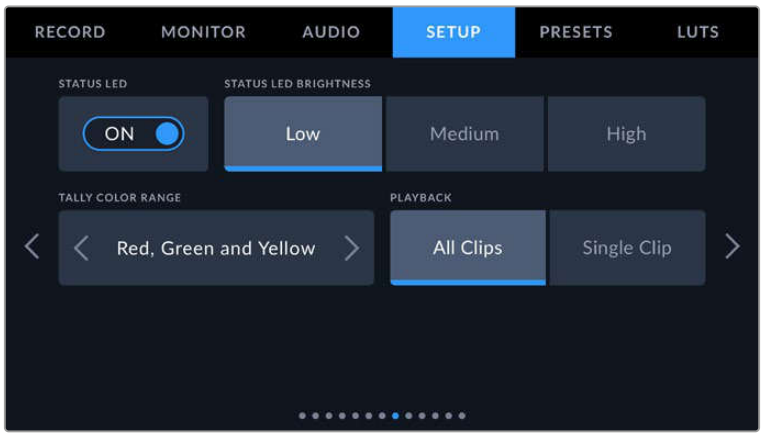

Status LED

Your URSA Broadcast G2 has a small LED on the front panel that provides tally and status information. You can enable or disable it by tapping the 'Status LED' switch icon.

The LED will provide the following status indicators:

White	The camera is powered on and in standby mode.
Red	The camera is recording. Slow flashing indicates that your card space is low, while rapid flashing indicates dropped frames.
Green	The camera is in playback mode. The LED alternates slowly between green and off while a clip is playing. When inserted media is recognized, the status LED blinks green and white three times.
Orange	If your camera's battery is low, the LED will flash orange and your other current status color. For example, if currently recording, the LED indicator will slowly alternate between orange and red. If your camera is in standby mode, the LED will alternate between white and orange. The threshold for 'low' battery is 20 percent for batteries that support percentage accurate charge information, or 12.5 volts for batteries that don't.

Status LED Brightness

To set the brightness of your URSA Broadcast G2's status LED, simply tap 'low,' 'medium,' or 'high.'

> **TIP** The status LED settings on your Blackmagic URSA Broadcast G2 also control the status LEDs on URSA Mini Recorder, Blackmagic Zoom Demand and Blackmagic Focus Demand.

Playback

This setting allows you to select whether to play back a 'Single Clip' or 'All Clips' during playback. 'All Clips' will play back through all matching media sequentially, and 'Single Clip' will play one clip at a time. This also applies for the loop function. Selecting loop on 'All Clips' will play through all of the clips on your media and then loop. Selecting 'Single Clip' will loop one clip at a time.

Setup Settings Page 9

The ninth page of your URSA Broadcast G2's 'setup' tab contains settings that allow you to set your camera's streaming options.

For more information on setting up streaming from your URSA Broadcast G2, refer to the 'streaming video' section later in this manual.

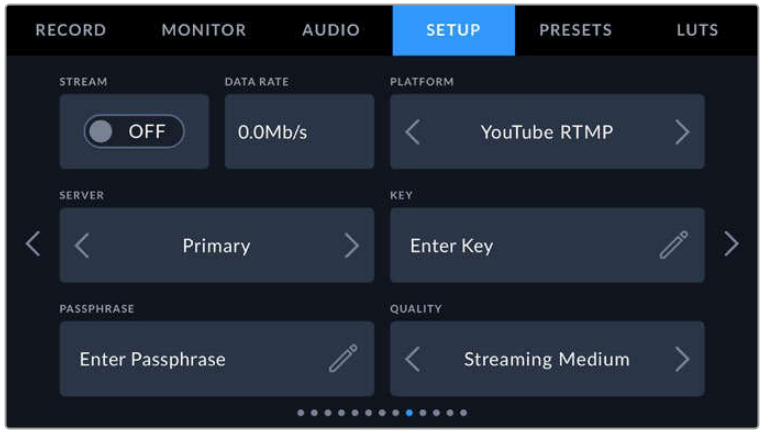

Stream

Use the stream switch to toggle your stream on or off.

Data Rate

Displays the data rate of the stream during streaming.

Platform

Select your desired streaming platform. Options include YouTube RTMP, YouTube SRT (Beta), Twitter and Twitch.

Server

Use the arrow buttons to choose a server, these options will change depending on your streaming platform.

Key

Tap the pencil icon to enter a stream key for your streaming platform.

Quality

Use the arrow buttons to select a streaming quality.

Setup Settings Page 10

The tenth page of your URSA Broadcast G2's 'setup' tab contains settings that relate to your camera's streaming options.

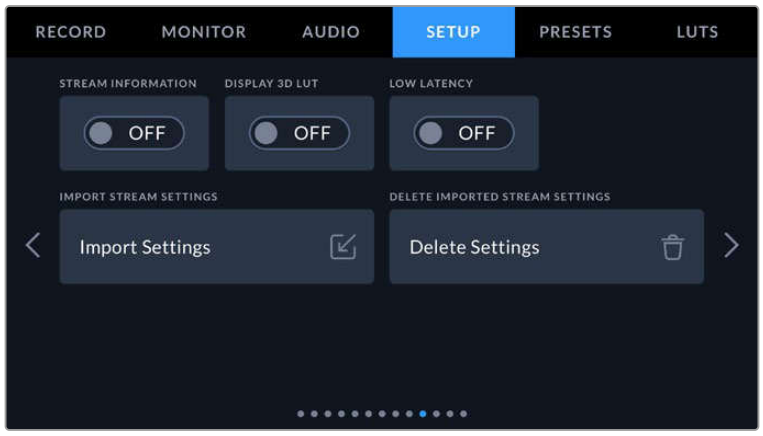

Stream Information

Toggle the 'stream information' switch to 'on' to display information on your camera's status display. This will be viewable on the LCD, front SDI or main SDI output.

The information includes the connection being used for streaming, for example Ethernet or a smartphone, a duration counter that shows the duration of your stream and a data rate using megabits per second.

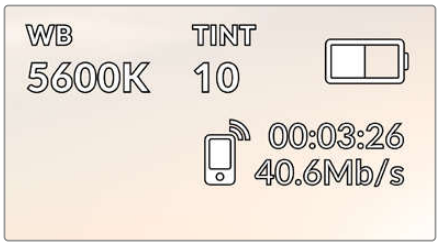

Display 3D LUT

Toggle this setting to 'on' if you want to apply a 3D LUT to your stream.

> **TIP** Switching the 'display 3D LUT' setting to 'on' will only apply a LUT to the direct stream output.
>
> If you are simultaneously recording to Blackmagic RAW or ProRes video codecs while streaming, you can use the LUT options in the record menu to add a LUT to your files, or the monitor settings to add a LUT on the LCD or SDI outputs. Refer to the 'record settings' section for more information.

Low Latency

Setting low latency to 'on' will ensure that there is minimum delay between what is happening live and what is being viewed by the audience. Setting it to 'off' gives you more buffering so is a more stable stream if you have an Internet connection that may be subject to dropouts or poor connection.

Import Stream Settings

Tap the 'import stream settings' button to import an XML setup file that has been created so your camera can find an ATEM Streaming Bridge on the Internet.

For more information on importing an XML setup file, refer to the 'streaming video' section later in this manual.

Delete Stream Settings

Press this button to delete your camera's imported streaming settings. You will be asked to confirm your selection.

Setup Settings Page 11

The eleventh page of the 'setup' tab contains your camera's network settings.

These settings allow you to configure options such as choosing between connecting to a network using DHCP or a static IP address.

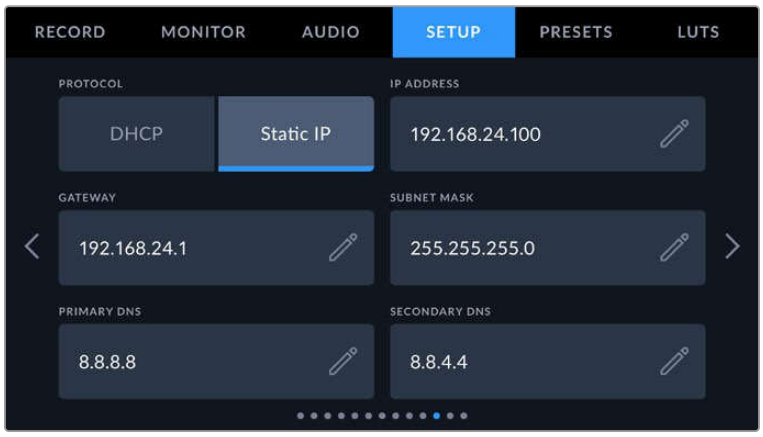

You can connect to a network using a DHCP or a static IP address

Setup Settings Page 12

The twelfth page of your URSA Broadcast G2's 'setup' tab contains the following settings.

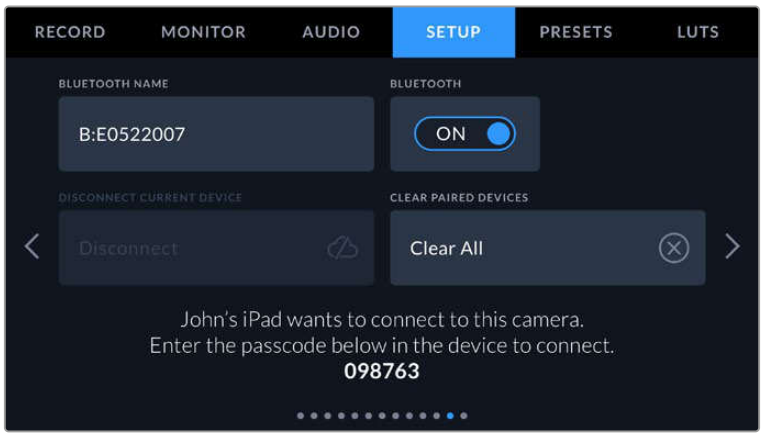

The camera Bluetooth name will be the letter of your camera as selected in the slate, followed by the 8 character hardware ID for your URSA Broadcast G2

Bluetooth®

Bluetooth control allows you to control your camera wirelessly from portable devices. Using the 'Blackmagic Camera Control App' you can power the camera on or off, change settings, adjust metadata and trigger record remotely from an iPad. You can enable or disable Bluetooth by tapping the 'Bluetooth' switch icon in the 'setup' menu. When Bluetooth is enabled, the camera can be detected by Bluetooth devices up to 30 feet away.

Because URSA Broadcast G2 uses the same set of commands for Bluetooth control as it does for 'Blackmagic SDI Camera Control Protocol', you can write your own applications to control almost every setting in the camera remotely, from monitoring to audio settings, the camera's inbuilt DaVinci Resolve color corrector or lens control.

For more information see the 'Blackmagic SDI Camera Control Protocol' section in this manual.

To pair your camera with an IPad for the first time:

1 Enable Bluetooth by tapping the 'Bluetooth' switch icon in the 'setup' menu on your URSA Broadcast G2.

2 Open the 'Blackmagic Camera Control App' and select the URSA Broadcast G2 you would like to pair with. Available cameras will be listed by their camera letter, followed by their unique hardware ID. For example A:3198FC00.

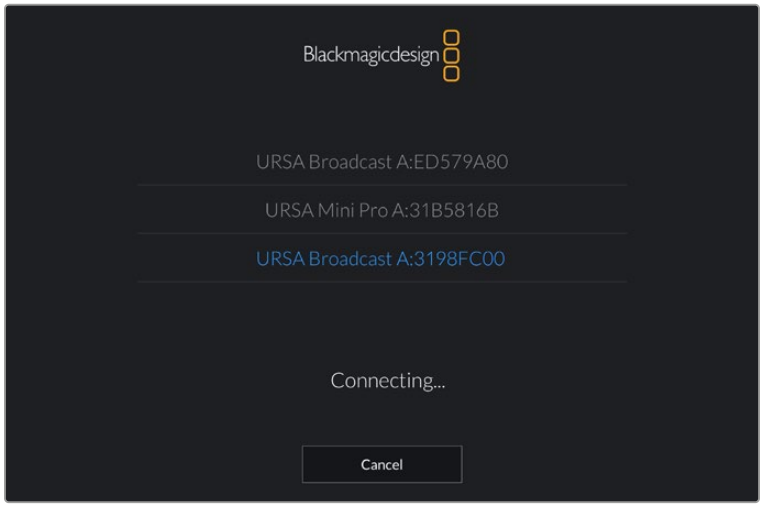

Select the URSA Broadcast G2 you would like to pair with

When you install the Blackmagic Camera Control App and run it for the first time, you will be asked if you want to 'allow location access.' If you select 'while using the app,' GPS readings from your iPad will be included in the metadata of the files you shoot, allowing you to geotag footage. This information can be viewed in Blackmagic DaVinci Resolve versions 14 or higher.

If you do not want to using this information, select 'never.'

To change settings, go to settings, privacy, location services, camera control on your iPad.

3 When you try to connect for the first time the Blackmagic Camera Control App will request a six digit code to pair with the camera. This code will be displayed on the camera's LCD screen. Type this code into the iPad.

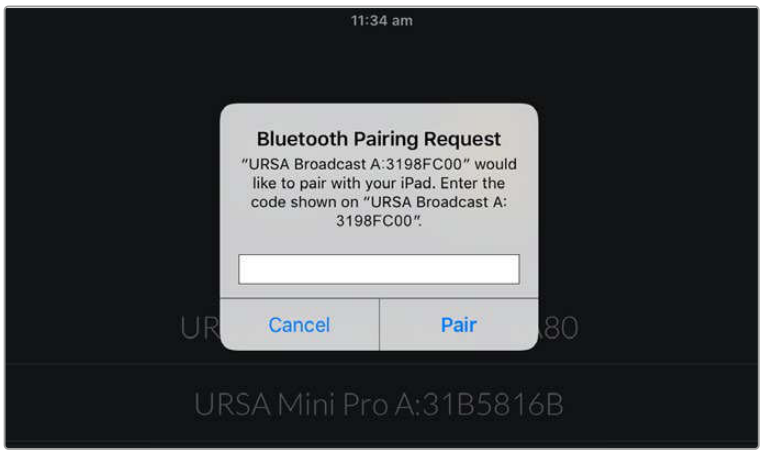

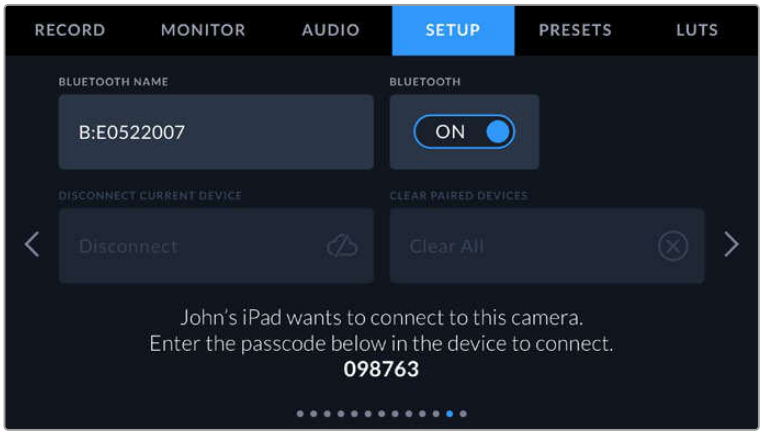

4 The information on the screen will confirm that your URSA Broadcast G2 is now paired with your iPad.

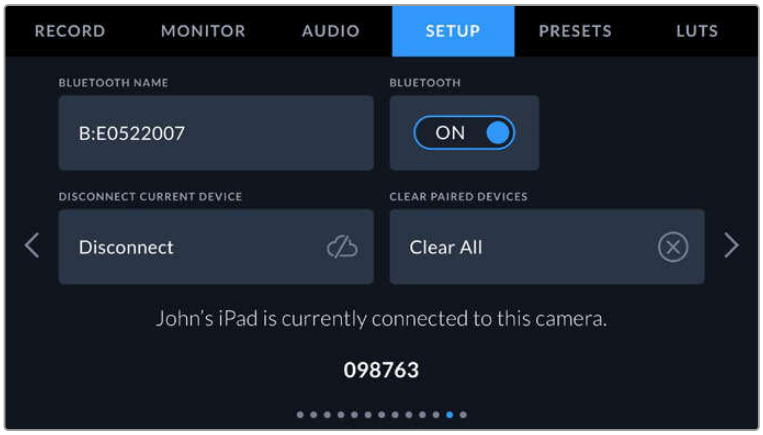

5 If there is a problem pairing the camera to your iPad you will see the following error message:

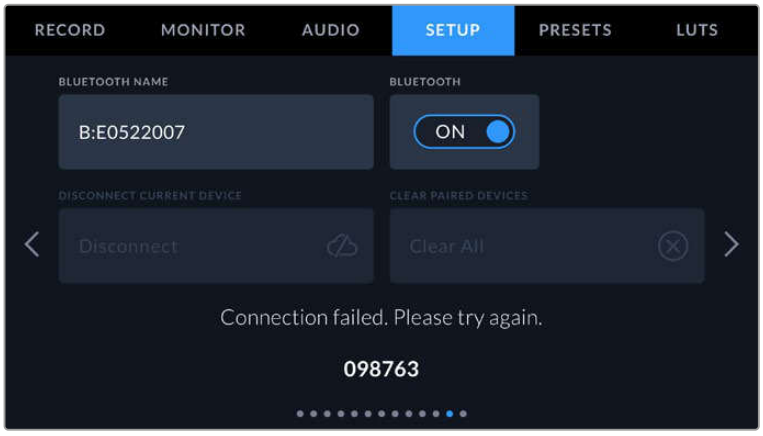

NOTE If you are not using Bluetooth to control your URSA Broadcast G2, it is a good idea to turn Bluetooth off for the purpose of security.

Disconnect Current Device

Use this setting to disconnect your URSA Broadcast G2 from the iPad it is currently paired with.

Clear Paired Devices

Use this setting to clear the list of devices that your URSA Broadcast G2 has been paired with.

Controlling Your Camera with the Blackmagic Camera Control App

Once you have successfully paired your URSA Broadcast G2 to your iPad, you can power the camera on or off, change settings, adjust metadata and trigger record remotely using the iPad app.

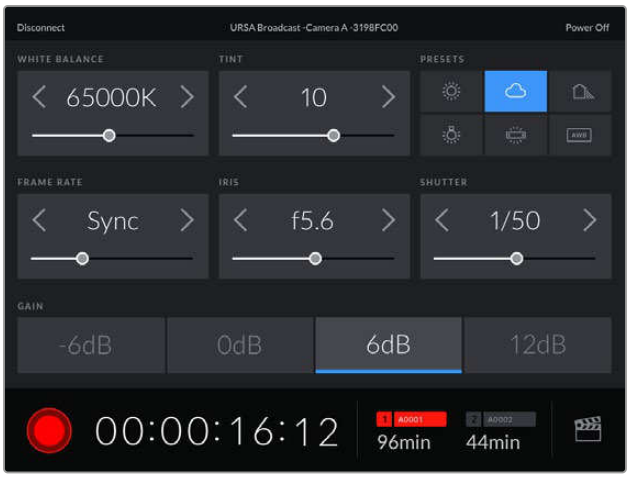

Once paired, the Blackmagic Camera Control app will display this screen, allowing you to adjust your settings and start recording

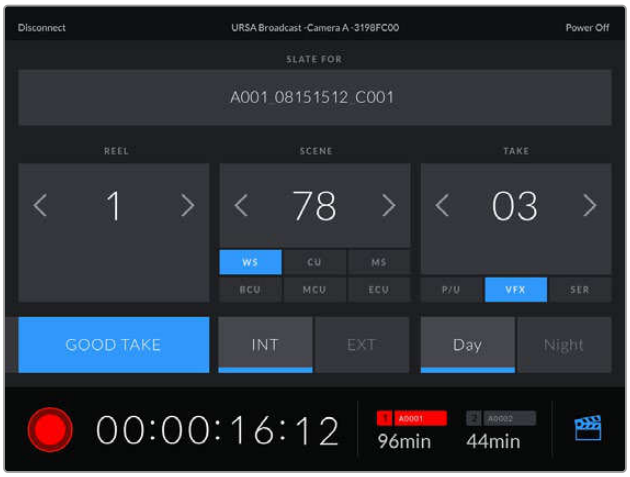

Tap the slate icon in the lower right corner to access and update the slate

URSA Broadcast G2 uses Bluetooth LE to communicate with devices for wireless control. As this is the same type of protocol used in portable devices, it only uses a minimal amount of battery power.

You can power off your URSA Broadcast G2 by tapping 'power off' in the top right corner.

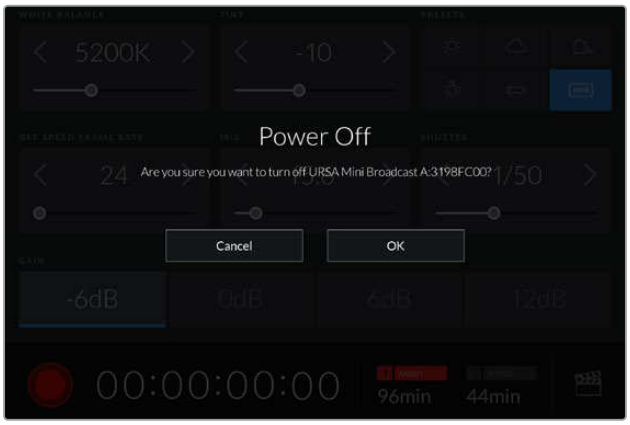

You will be prompted to confirm your selection before your camera is powered off

When Bluetooth is enabled and URSA Broadcast G2 is powered off, the name of your camera will still show up on the list of available devices in the Blackmagic Camera Control App. Since you have already paired with your camera, you can now switch it on remotely by selecting your camera name and tapping 'Connect'. Your camera will not show up in this list if Bluetooth is disabled.

Setup Settings Page 13

The thirteenth page of your URSA Broadcast G2's 'setup' tab contains the following settings.

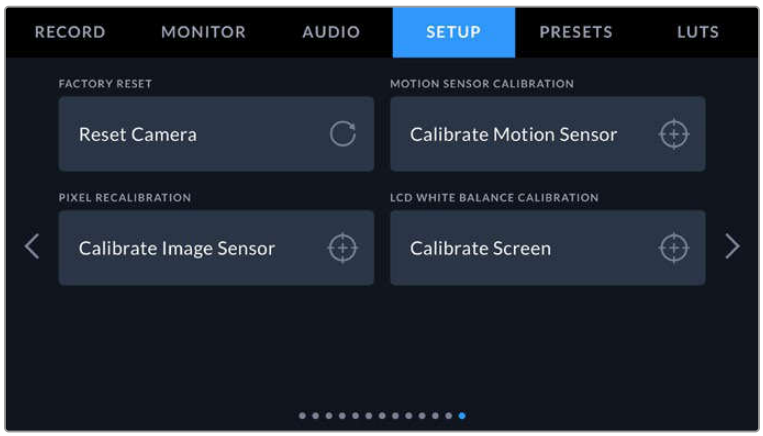

Factory Reset

To reset the camera to its default factory settings, tap the 'reset camera' button. You will be asked to confirm this action as it will erase any LUTs and presets currently stored on the camera. Tap 'reset' on the confirmation page to reset your camera settings.

It's important to note that a factory reset erases any presets and custom LUTs, and resets all settings. It is a good practice to export them to a memory card as a backup before performing a factory reset. After a factory reset, you can restore your presets and LUTs quickly by importing them from the memory card.

When selecting 'factory reset' you will be prompted to confirm your action

Motion Sensor Calibration

To calibrate the horizon meter on URSA Broadcast G2, place your camera on a surface you know is level and tap the 'calibrate motion sensor' button. It is essential that you keep the camera stable during calibration. This is to ensure that the recorded motion sensor metadata in the Blackmagic RAW files during filming is accurate. The process takes approximately five seconds to complete.

The horizon can be set off center if needed. For example, if you want to set the tilt at a consistent angle, calibrate the motion sensor with the camera at the angle you want, then use the horizon meter to maintain the same angle.

The motion sensor data can be used in DaVinci Resolve to stabilize clips. Refer to the 'gyro stabilization' section for more information.

Pixel Recalibration

The CMOS sensor used in your URSA Broadcast G2 is made up of millions of pixels that respond to light. As a result, they become more visible and become what is known commonly as hot pixels. All camera sensors, regardless of manufacturer, will develop this variation in pixel brightness over time.

To solve this, URSA Broadcast G2 has a built in recalibration feature that you can run if you see any pixels that are brighter than others.

To begin this process, simply put on the lens cap and run the pixel recalibration feature by tapping the 'calibrate image sensor' button, then tap 'calibrate' to confirm your choice. The process takes approximately one minute to complete.

LCD White Balance Calibration

To perform LCD white balance calibration, adjust the 'LCD temperature' and 'LCD tint' controls so that the two reference patches look neutral. After you change the settings, you can use the 'reset' button to return the controls to the factory calibration. The 'restore' button brings back your new settings, which helps you compare the appearance before and after calibration. When the LCD shows an accurate white balance, save your settings.

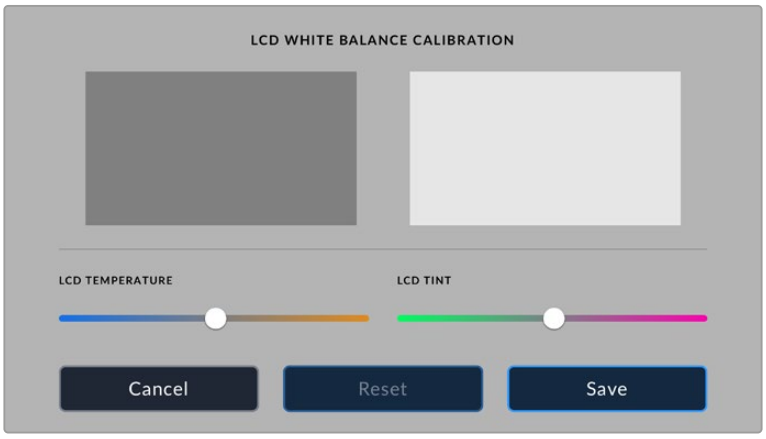

Presets

The ‘presets’ tab lets you save and recall a complete collection of settings for your URSA Broadcast G2. This is very useful when one camera is used for multiple projects. For example, you may use your URSA Broadcast G2 for a variety of different shoots, from documentaries to music videos, with very different settings between types of projects. Your URSA Broadcast G2’s ‘presets’ function lets you save the setup for a particular project or type of shoot and come back to it quickly and easily when required.

You can also import and export presets, which is very useful for setting up a multi camera shoot. Simply set up one URSA Broadcast G2 to suit your project, then export that preset for all the other URSA Broadcast G2s on set.

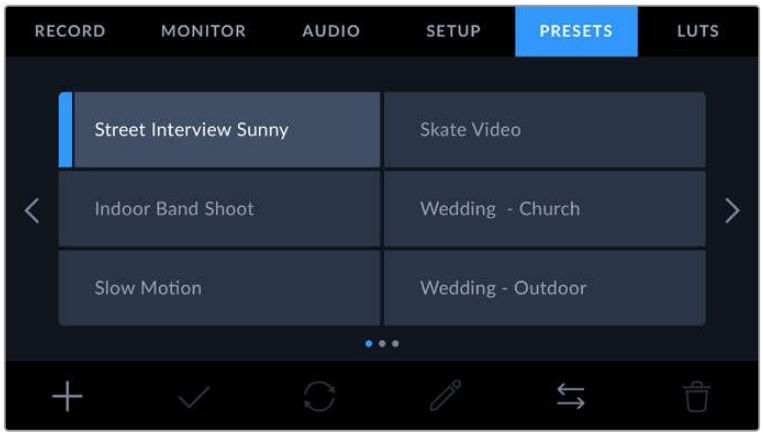

Your URSA Broadcast G2’s Presets tab

NOTE Your URSA Broadcast G2 can save up to sixty presets to its internal memory.

Preset buttons

The button icons along the bottom of your URSA Broadcast G2’s ‘preset’ menu correspond with the following functions.

Add	**Load**	**Update**	**Manage**	**Delete**

Saving and loading presets

To create a new preset, tap the ‘add’ icon. This will bring up a touch keyboard on your LCD touchscreen where you can name your preset. Once you’ve typed in the name, tap ‘update’ to save all of your URSA Broadcast G2’s current settings to that preset.

If your URSA Broadcast G2 already has a preset loaded with the same name, you will be prompted to overwrite the existing preset or keep both.

Enter a name for your preset by tapping the 'add' icon in the preset tab and using the touch keyboard

Once you have a preset saved, tap its name in the preset menu to select it. To load it tap the 'load' icon.

You can update a preset by tapping the 'update' icon. This will bring up a prompt asking you if you want to update the preset with your URSA Broadcast G2's current setting. Tap 'update' to confirm.

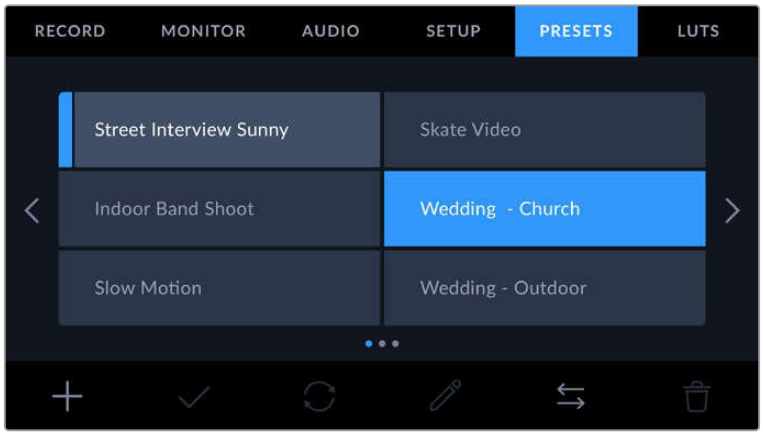

Select a preset and tap the 'load' icon to load it. Selected presets will appear solid blue, while currently loaded presets have a blue line on the left of their icon

Importing presets

To import a preset, tap the 'manage' icon at the bottom of the preset menu. Select either SD or CFast with the storage media selection switch, depending on where your presets are saved. You can also import presets from a USB-C flash disk or from an SSD if you are using URSA Mini Recorder.

From the 'import from' options tap the card or drive that contains the preset you want to import and confirm your selection by tapping the 'import' button. This will bring up the import screen. You can use the buttons at the top left of this screen to display any available presets on other cards or drives connected to your camera.

Your URSA Broadcast G2 will search the root directory and 'presets' folder on the selected storage media. It's worth noting that presets saved elsewhere on your storage media will not be visible.

Tap a preset to select it and tap 'import' to confirm. If the preset you want to import has the same name as a preset already saved to your camera, you will be prompted to overwrite the existing preset or keep both. At the top right of this screen, you'll see the number of remaining empty preset slots available on your camera.

NOTE If your URSA Broadcast G2's preset slots are full, the import menu will not be available. You will need to delete an existing preset to make room.

Exporting presets

To export a preset to a CFast or SD card, select the preset you want to export by tapping it, and tap the 'manage' icon.

From the 'manage preset' options choose 'export selected preset'. Use the storage media selection switch to select either SD or CFast, depending on the location you would like to export the preset to. You can also export presets to a USB-C flash disk or to an SSD if you are using URSA Mini Recorder. From the 'export to' options tap the card or drive you would like to export your preset to. Confirm your choice by tapping 'export'.

If the storage media you've chosen already has a preset saved to it with the same name as the one you're exporting, you will be prompted to overwrite the preset on the card, or keep both presets.

Deleting presets

Your URSA Broadcast G2 has space for sixty presets. To delete a preset, select it and tap the 'delete' icon. You will be prompted to confirm your choice. Tap 'delete' to confirm.

LUTS

The 'LUTS' menu lets you import, export and apply 3D LUTs to your camera's outputs.

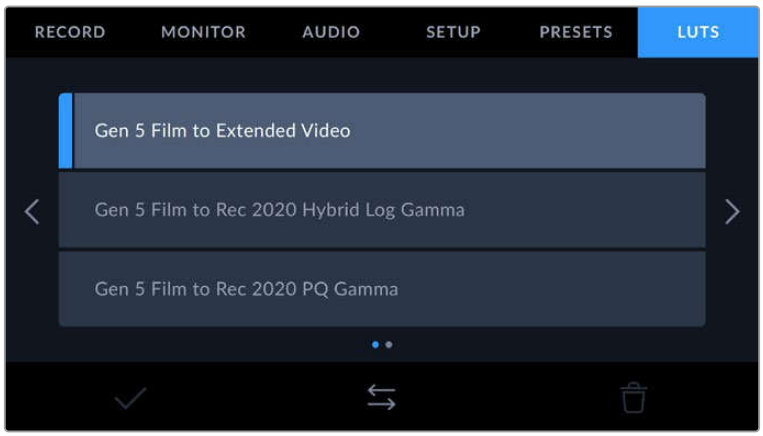

Your URSA Broadcast G2's LUT tab

Introducing 3D LUTs

Your URSA Broadcast G2 can apply 3D LUTs to images on its LCD touchscreen, front SDI and main SDI. LUTs work by telling your camera what color and luminance output to show for a particular color and luminance input. For example you may want to record internally in camera with normal color but send a preview out to your monitors and switcher of what broadcast legal colors for your region will look like. This is also useful when shooting Blackmagic RAW footage or using 'film' dynamic range, both of which have an intentionally undersaturated, 'flat' appearance. By applying a LUT, you can get an idea of what your footage will look like after it has been graded.

It is easy to create 3D LUTs using DaVinci Resolve or other color correction software, and LUTs are available online from a variety of sources. Your URSA Broadcast G2 can store up to thirty 17 point or 33 point 3D LUTs, of up to 1.5 megabytes each. Once loaded, you can choose to display a given LUT on your camera's LCD touchscreen, front SDI, main SDI or any combination of these outputs.

Your URSA Broadcast G2 supports 33 point 3D LUTs in .cube format created in DaVinci Resolve and 17 point 3D LUTs converted to Resolve .cube format via LUT conversion programs. Your camera processes 3D LUTs using high quality tetrahedral interpolation.

For more information on displaying LUTs, see the 'monitor settings' section in this manual.

NOTE Your Blackmagic URSA Broadcast G2 does not apply, or 'bake in,' LUTs by default to recorded footage, however you can choose to 'bake in' the LUT to your footage.

This can be a useful option for situations where you do not have the time to grade your footage in post-production, or where you need to give the footage directly to a client or an editor.

When you are using LUTs as a preview tool on set, the information on the LUT applied is saved as metadata with your recordings. DaVinci Resolve can display this information in the 'LUT used' field in the metadata tab, which can be helpful for colorists to verify the name of the LUT that was used on set.

Built-in LUTs

Your URSA Broadcast G2 provides a number of built-in LUTs, that allow you to preview different looks whilst shooting in 'film' dynamic range or when shooting Blackmagic RAW.

- **Gen 5 Film to Extended Video**
  Displays a wider dynamic range than the 'film to video' LUT, and applies a mild contrast change with a smooth roll off in the highlights.
- **Gen 5 Film to Rec 2020 Hybrid Log Gamma**
  Displays a gamma curve that is suitable for HDR screens and compatible with standard dynamic range screens.
- **Gen 5 Film to Rec 2020 PQ Gamma**
  Displays a gamma curve that is based on what we can perceive with our eyes, for efficient encoding of HDR images.
- **Gen 5 Film to Video**
  Similar to the REC 709 color standard for high definition video, and has a high level of contrast and saturation. You may find this setting useful when using Blackmagic URSA Broadcast G2 alongside other broadcast cameras using the REC 709 color space.

LUTS buttons

The button icons along the bottom of your URSA Broadcast G2's 'LUTS' screen correspond to the following functions:

Importing LUTs

To import a 3D LUT, tap the 'manage' icon at the bottom of the LUT menu. Select either SD or CFast with the storage media selection switch, depending on where your LUTs are saved. You can also import LUTs from a USB-C flash disk or from an SSD if you are using URSA Mini Recorder.

Tap the card or drive that contains the LUT you want to import from the 'import from' menu and tap the 'import' button. From the import screen you can use the buttons on the top left to display any available LUTs on other cards or drives attached to your camera.

Your URSA Broadcast G2 will search the root directory and '3DLUTS' folder on your selected storage media. Any LUTs you have saved elsewhere will not be visible.

Tap a LUT to select it and tap 'import' to confirm your selection. The LUT will be saved to your URSA Broadcast G2.

NOTE If your URSA Broadcast G2's thirty 3D LUT slots are full, you will not be able to import until you delete some existing LUTs to make space.

If the LUT you want to import has the same name as a LUT already saved to your camera, you will be prompted to overwrite the existing LUT or keep both. At the top right of this screen, you'll see the number of remaining empty LUT slots available on your camera. You will only be able to import as many LUTs as you have free slots on your camera.

NOTE If you are having trouble importing a LUT to your URSA Broadcast G2, it may be the wrong size. You can use a LUT editor like Lattice to check its size, or open it in any text editor on your computer. Next to the tag 'LUT_3D_SIZE' will be a number indicating the LUT's size. If this value is not 17 or 33, you can use Lattice to resize your 3D LUT to 17 points.

Applying a LUT

Once you have a LUT saved onto your camera, tap it in the LUT menu to select it, and tap the 'load' icon. This will enable that LUT to all outputs on your camera. However, you will still have to turn 'display LUT' on in the monitor menu for each output to apply it. See the 'monitor settings' section in this manual for more information.

Exporting LUTs

To export a LUT to a CFast or SD card, select the LUT you want to export and tap the 'manage' icon. From the 'manage LUT' options choose 'export selected LUT'. Use the storage media selection switch to select either SD or CFast, depending on the location you would like to export the LUT to. You can also export LUTs to a USB-C flash disk or to an SSD if you are using URSA Mini Recorder.

From the 'export to' options choose the card or drive you want save your LUT to. Tap 'export' to confirm your choice. If a duplicate LUT is found on the card or drive you are exporting to, you will be asked if you want to overwrite the LUT or keep both.

Deleting LUTs

Your URSA Broadcast G2 has space for thirty 17 point or 33 point 3D LUTs. To delete LUTs you are no longer using, or make room for more, select the LUTs you want to delete and tap the icon. You will be prompted to confirm your choice. Tap 'delete' to confirm.

Embedded 3D LUTs

When a 3D LUT is used whilst shooting Blackmagic RAW on URSA Broadcast G2, the selected LUT will be embedded into the Blackmagic RAW file that you are recording. The 3D LUT is actually saved with your recorded files in the header of the .braw file, and can easily be applied to footage in post production without needing to handle a separate file.

So when Blackmagic RAW files are delivered to an editor or colorist, they will be able to easily access the LUT that was used whilst filming, which greatly reduces the possibility that the wrong 3D LUT could be applied to a clip. They can then choose whether to apply the 3D LUT whilst editing or color grading the footage, and can disable the 3D LUT at any time.

When the 'Apply LUT in file' switch is set to 'on' in URSA Broadcast G2's record menu, the recorded clip will open in Blackmagic RAW Player and DaVinci Resolve with the chosen 3D LUT already applied to it. The 3D LUT can then be easily toggled 'on' or 'off' but will always travel with the Blackmagic RAW file as it is written into the clip itself.

DaVinci Resolve also has an 'Apply LUT' switch in the RAW settings palette for enabling or disabling the 3D LUT in the Blackmagic RAW file. The 'Apply LUT' setting in DaVinci Resolve is the same setting as in the camera. This means that when shooting you can direct the colorist to use the LUT by setting it in the camera, but they can switch it off easily in DaVinci Resolve by setting 'Apply LUT' to 'off'.

Entering Metadata

Metadata is information saved inside your clip, such as shot numbers, camera settings and other identifying details. This is extremely useful when sorting and processing footage in post production. For example, take and shot and scene numbers are essential organizational tools, while lens information can be used to automatically remove distortion or better match VFX assets to plates.

Your Blackmagic URSA Broadcast G2 automatically saves some metadata to each clip, such as camera settings, timecode, date and time. You can use your camera's slate to add many additional details.

The Slate

Swiping left or right on your URSA Broadcast G2's touchscreen will bring up the slate.

The slate is divided into 'clips', 'project' and 'lens data' tabs. The 'clips' tab contains information that may vary clip by clip, while 'project' is where you enter details common between clips, such as the project name, director, and camera and operator ID. The 'lens data' tab displays information about the lens fitted to your camera. If the lens automatically sends information back to your camera it will be displayed here. You can also enter lens data manually.

TIP Metadata entered into the slate is viewable on your URSA Broadcast G2's front or main SDI outputs when 'display status text for' is set to 'director' on the 'monitor' tab. See the 'monitor settings' section in this manual for more information.

'Clip' metadata

Changes made to clip metadata work slightly differently in standby mode, when your URSA Broadcast G2 is ready to record, and playback mode, when you're reviewing footage you've already shot. In 'standby,' clip metadata will be saved to the next clip recorded, except for 'good take last clip' which refers to the most recently recorded clip.

In playback mode clip metadata is always recorded to the current clip being viewed.

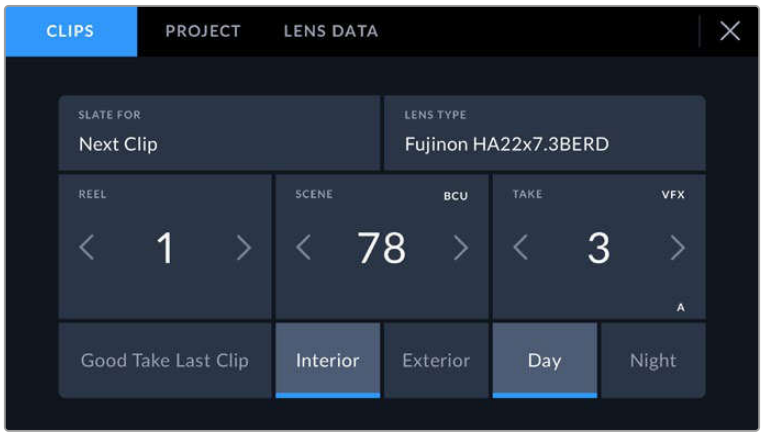

Your URSA Broadcast G2's slate is divided into 'clip', 'project' and 'lens data' tabs

Slate for

This setting shows the clip which the metadata currently displayed in the 'clip' applies to. In standby mode, this refers to the next clip that will be recorded.

Lens Type

This displays information about the lens attached to your camera. For more information about 'lens type' data, refer to the 'lens data' section below.

Reel

The 'reel' indicator shows the current reel.

Your URSA Broadcast G2 automatically increments reel numbers, so there is usually no need to enter this manually. When you are moving to a new project and want to start from reel '1' again go into the project tab of the slate and tap 'reset project data'.

Scene

The 'scene' indicator shows the current scene number, and can also show the current shot number and type.

The number on this indicator always refers to the current scene. You can adjust it with the left and right arrows on either side of the scene number, or tap the scene number to enter the scene number editor.

Scene numbers range from 1 to 999.

By adding a letter to the scene number in the scene number editor, you can also indicate the current shot. For example 23A indicates scene twenty three, shot one. If you have a shot letter added to your scene number, your camera suggests the next scene number and shot letter whenever you enter the scene number editor. For example, if your current scene number is 7B, the camera suggests '8' and '7C'.

The scene number indicator can also show information about the current shot type in the top right corner. You can select these in the scene number editor at the right hand side of the scene keyboard.

The shot types available are:

WS	wide shot
MS	medium shot
MCU	medium close up
CU	close up
BCU	big close up
ECU	extreme close up

When entering 'scene' metadata, your URSA Broadcast G2 will prompt you with increment suggestions to the left of the touch keyboard, and shot types to the right

Take

The ‘take’ indicator shows the take number for the current shot. You can increment this up or down by tapping the left or right arrows on either side of the take number, or tapping the indicator to enter the take number editor.

> **TIP** When the shot number or scene letter are advanced, the take number will revert to ‘1.’

You can add take descriptions in the take number editor. These are offered to the right of the take number keyboard, and correspond to the following scenarios:

PU	‘Pick up.’ This refers to a reshoot of a previous take to add additional material after principal photography has wrapped.
VFX	‘Visual effects.’ This refers to a take or shot for visual effect use.
SER	‘Series.’ This refers to a situation in which multiple takes are shot while the camera is kept running.

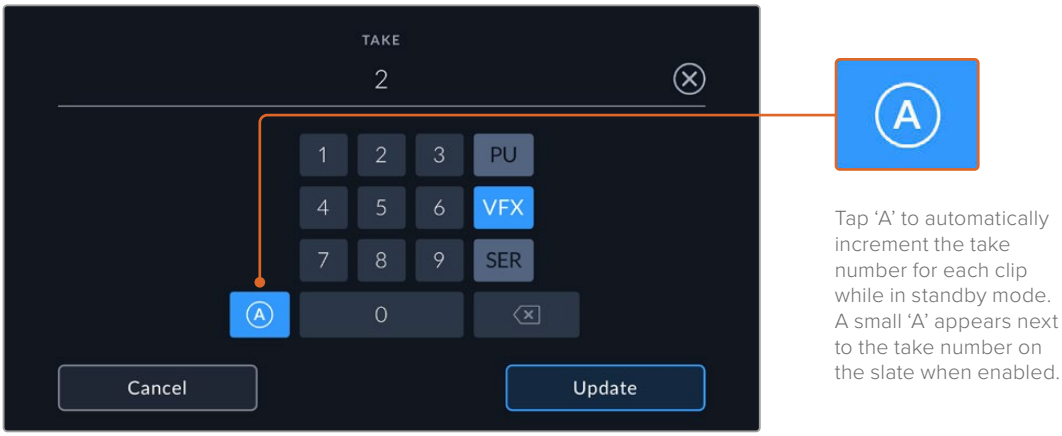

When entering ‘take’ metadata, your URSA Broadcast G2 will offer prompts for additional shot types to the right of the touch keyboard

Good take

Tap the ‘good take’ indicator to flag good takes for easy recall in post production. This tag applies to either the last clip recorded, if your URSA Broadcast G2 is in standby mode, or the clip currently being viewed in playback mode.

Interior/Exterior

Tap ‘interior’ or ‘exterior’ to add a tag to the next clip in standby mode, or the current clip in playback mode.

Day/Night

Tap the ‘day’ or ‘night’ icons to add a ‘day’ or ‘night’ tag to the next clip in standby mode, or the current clip in playback mode.

‘Project’ Metadata

Project metadata behaves the same way whether you are in standby or playback mode. This metadata always refers to your project as a whole and is independent of clip numbers.

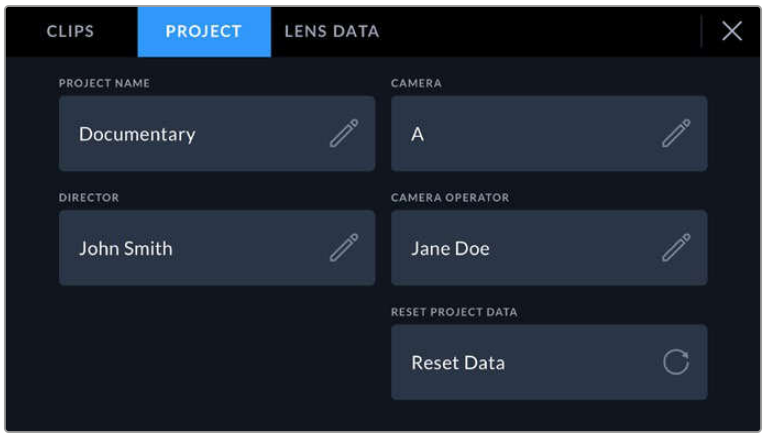

Your URSA Broadcast G2’s ‘project’ slate tab

Project name

Displays your current project name. Tap the pencil icon to change the project name.

Camera

Displays a letter camera index. Tap the pencil icon to change the camera index.

Director

Displays the director’s name for the current project. Tap the pencil icon to change the director name.

> **NOTE** Camera index is used in metadata and for file naming purposes and differs from your URSA Broadcast G2’s ATEM Camera ID, which is used when controlling your URSA Broadcast G2 with an ATEM switcher. For more information on ATEM Camera ID, see the ‘Understanding Studio Camera Control’ section in this manual.

Camera Operator

Displays the camera operator. Tap the pencil icon to change the camera operator name.

Reset project data

To clear project data tap the ‘reset data’ button and then confirm your choice. This will clear all the entered project data.

Lens Data

The ‘lens data’ page displays information about the lens fitted to your URSA Broadcast G2. Many electronic lenses automatically supply information such as the lens model, aperture and focal length.

If you are using a lens that does not provide this information, or you want to enter additional data, you can tap the pencil icon in this setting to enter the information manually. This will bring up the ‘lens data’ menu, which contains the following information:

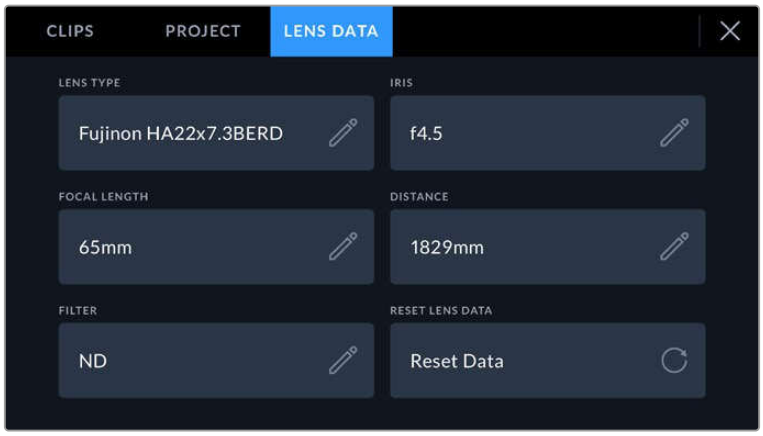

The lens data page showing information automatically populated from a Fujinon lens

- **Lens Type**
  Shows the lens model. If your lens type is not automatically shown here, you can tap this setting to enter the data manually.

Use the touch keyboard to enter lens data if it is not provided automatically

- **Iris**
  Shows the iris aperture setting at the start of your clip. If this information is supplied automatically it can be displayed in f- or T-stops depending on your lens. If the iris information for your lens is not automatically shown here, you can tap this setting to enter the data manually.
- **Focal length**
  Shows the focal length setting of the lens at the start of the recorded clip. When automatically supplied, this is shown in millimeters. If the focal length information for your lens is not automatically shown here, you can tap this setting to enter the data manually.
- **Distance**
  Shows the focus distance settings of the lens for the recorded clip. Some lenses can provide this data automatically and it will be provided in millimeters. If the focal distance information for your lens is not automatically shown here, you can tap this setting to enter the data manually.
- **Filter**
  Shows the current lens filters used. Tap this setting to enter data manually. You can make multiple entries separated by commas.

Filter information needs to be entered manually

Reset lens data

You can clear lens data at any time by tapping the 'reset data' button. You will be prompted to confirm your choice. This will reinitialize communication with your lens and refresh the electronically populated data, any fields that have been manually added will also be cleared.

Gyro Stabilization

Your Blackmagic URSA Broadcast G2 Camera automatically records pan, tilt and roll data captured by an internal motion sensor. This data is also known as gyro data, which DaVinci Resolve can then use to stabilize handheld shots.

It's important to calibrate your camera's motion sensor prior to recording to ensure that the recorded gyro data is accurate. You can find more information in the 'settings' section under 'motion sensor calibration'.

NOTE To enable the gyro stabilization you will need to make sure your lens's optical image stabilization is turned off. EF and B4 lenses with built in optical stabilization have a physical switch to turn it on or off.

Recording Gyro Data with Manual Lenses

For gyro stabilization to work at its best, it requires accurate lens focal length information which is included in the metadata that is automatically recorded when using most EF and B4 lenses. For manual lenses that do not support electronic communication with the camera, or analog B4 lenses, you will need to enter this information into the camera's slate.

1. Swipe left or right on your camera's touchscreen from the main view to bring up the slate.
2. Tap the 'lens data' tab.
3. Tap on the 'focal length' section and type in the focal length of the lens you are using. For example, if you are using an analog B4 lens at a 8mm focal length type in '8mm'.

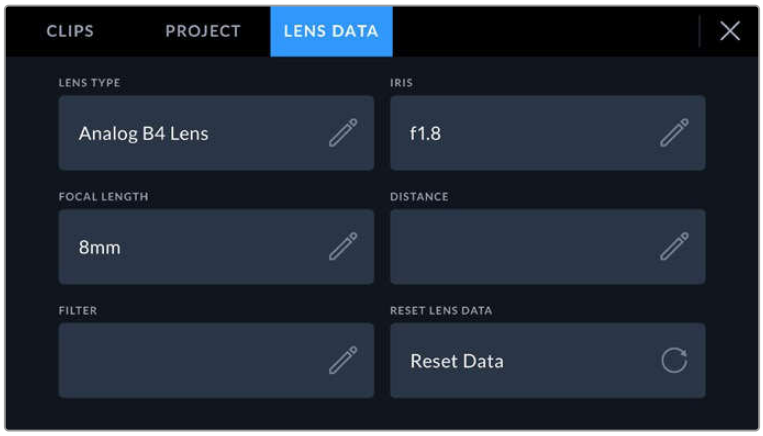

Enter 'lens data' when using lenses that do not have electronic communication with the camera

NOTE You will need to update this information each time you change focal lengths on manual or analog lenses. Lenses with in built electronics will automatically overwrite the metadata.

Applying Gyro Stabilization in DaVinci Resolve

After importing your clips and setting them up on a timeline:

1. Go to the 'edit' page's inspector window and scroll down to 'stabilization'.
2. Set the stabilization mode to 'gyro'.
3. Click 'stabilize'.

A progress bar will let you know when the stabilization is complete.

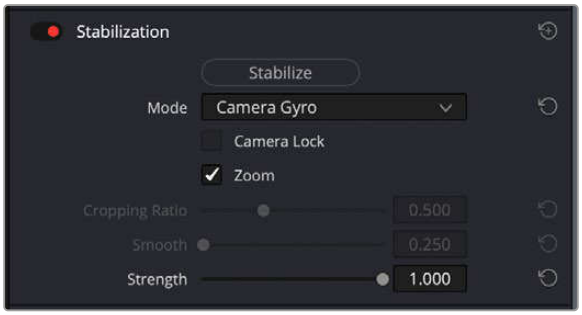

In the inspector window select 'camera gyro' to stabilize the footage using gyro data

TIP You can enhance the results by shooting with narrow shutter angles to minimize motion blur. For example, 45 degrees.

Streaming Video

URSA Broadcast G2 has its own built in streaming engine that enables the camera to stream directly to platforms such as YouTube, Facebook Live and Twitch.

You can also connect URSA Broadcast G2 to an ATEM switcher on the same Ethernet network, or via the Internet anywhere in the world using an optional ATEM Streaming Bridge. When streaming to an ATEM switcher, this setup also includes tally, talkback and camera control functionality.

Below are two examples showing URSA Broadcast G2 connected to an ATEM switcher using an ATEM Streaming Bridge. The first shows connecting locally over a network and the second illustration shows transmitting video over the Internet using a smartphone.

Connecting over a Network

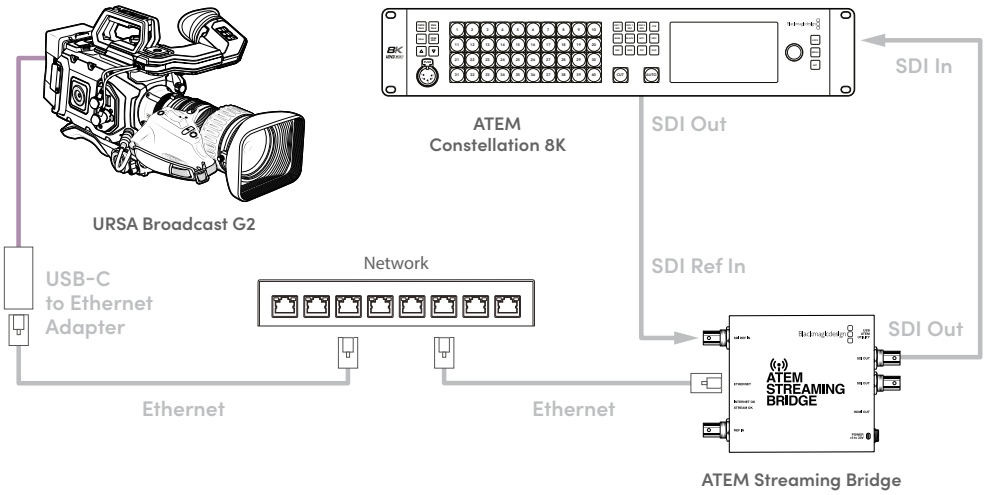

Connecting over the Internet

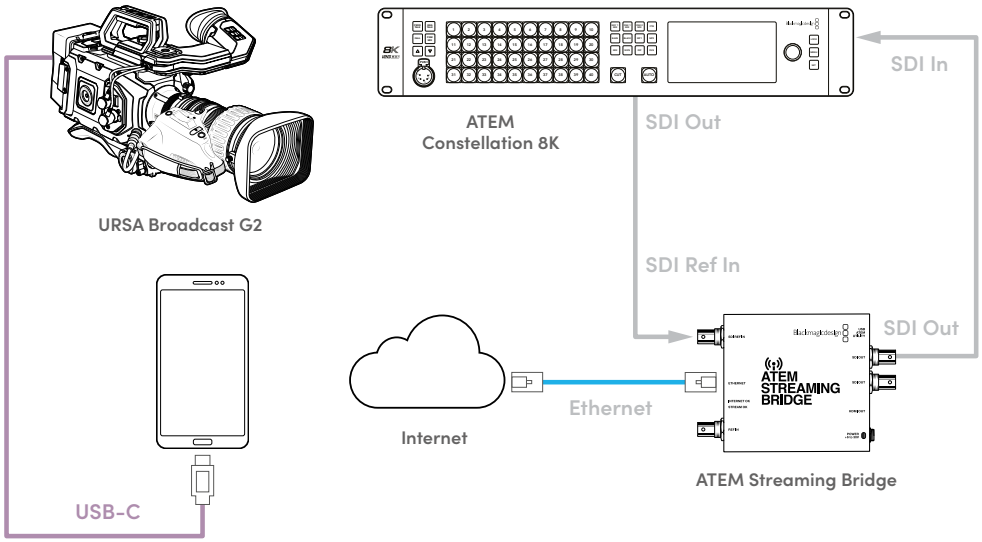

NOTE For streaming via an Ethernet adapter we recommend the Belkin USB-C to Gigabit Ethernet Adapter. While other USB-C to Ethernet adapters may work, the chipset used in the Belkin adapter is the most reliable for RTMP streaming video workflows.

Smartphone Setup

Connect a smartphone to your camera's USB-C expansion port using a USB-C cable. This connection lets you set up fast and be streaming to the world in any location where your smartphone has a 4G or 5G cellular connection.

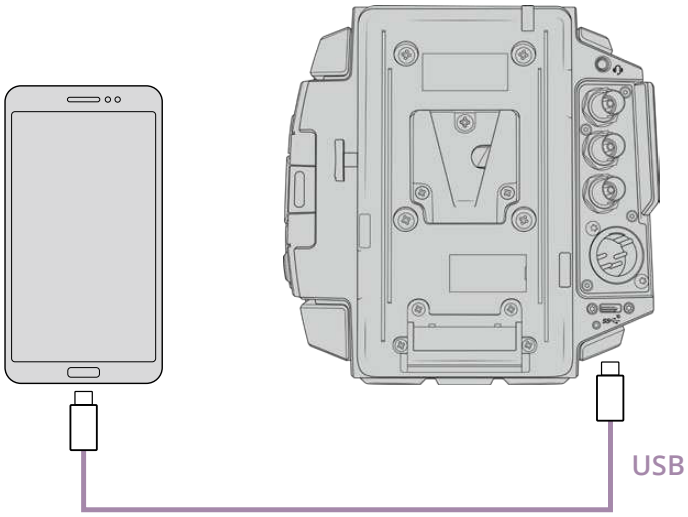

Settings

The first step to setting up your smartphone for internet streaming is to make sure it has hotspot activated.

1. On your iOS device open settings>personal hotspot and make sure the 'allow others to join' option is on.
2. You will see a message appear asking whether to trust the connected computer. Select 'trust' and a green tethering icon will be visible on the screen. This is how you can verify the connection is working.

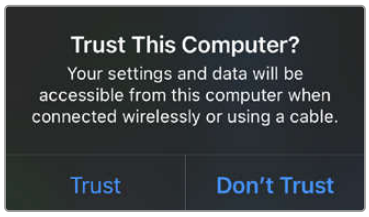

The tethering icon will appear when enabled

Your smartphone's clock will always appear within a green background icon while tethering is enabled.

For Android devices, swipe the screen to display the quick menu. Press and hold the hotspot icon and then turn on USB tethering.

TIP Once you have finished streaming, we recommend turning off tethering on your phone to save your phone's battery life.

Setting the ATEM Camera ID

The ATEM camera ID is a setting in your camera's menu settings that determines which SDI input your URSA Broadcast G2 is connected to on the ATEM switcher. When the camera ID corresponds to the switcher's input number, your camera will detect tally data for that input and tally and camera control will work correctly.

For more information on setting your camera's ATEM Camera ID, refer to the 'Setup Settings' section earlier in this manual.

Creating the XML File

To create an XML settings file connect ATEM Streaming Bridge to the internet by plugging a network cable from the 'Ethernet' port to an internet router or network switch.

Connect ATEM Streaming Bridge to your computer using a USB-C cable and launch ATEM Setup.

In the setup tab, confirm the network settings are correct and select 'internet' from the 'stream service' options. You should see a 'visible worldwide' message in the internet status box. This means everything is working correctly.

A Note About Port Forwarding

If you see a port forwarding or UPnP error in the 'internet status' box you will need to ask your internet provider or network administrator to set up port forwarding on your internet connection to 'TCP port 1935'.

Exporting the XML File

Once you have confirmed your settings in the ATEM Setup tab and have successfully connected your ATEM Streaming Bridge to your network or the internet, you can export the XML setup file.

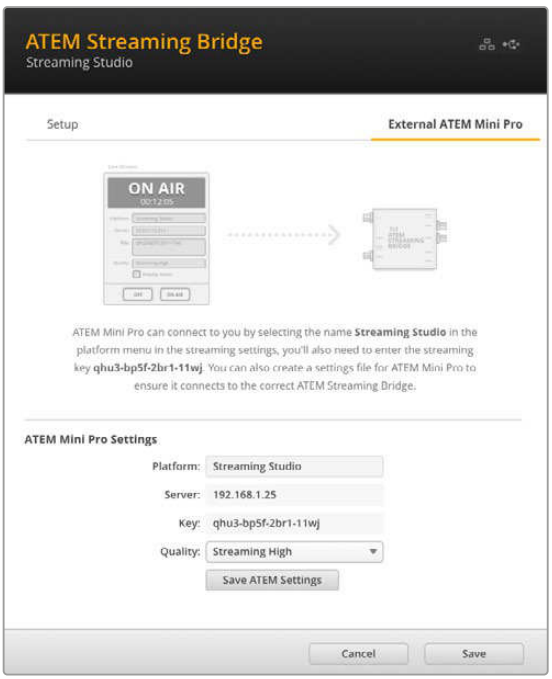

1. Click the 'external ATEM Mini Pro' tab in the top right of the window.
2. Click in the 'platform' box and type a new name. This name will be the name listed in the remote Blackmagic URSA Broadcast G2's platform menu.
3. Select the quality you want to stream. This setting will set the quality setting in the remote URSA Broadcast G2.
4. Click the 'Save ATEM Settings' button, choose a location on your computer to save the XML file and click 'save'.
5. You can now email the saved XML file to the remote operator.

Loading the XML File

To import an XML settings file in to your URSA Broadcast G2, copy the file to an SD card, CFast card or USB-C flash disk.

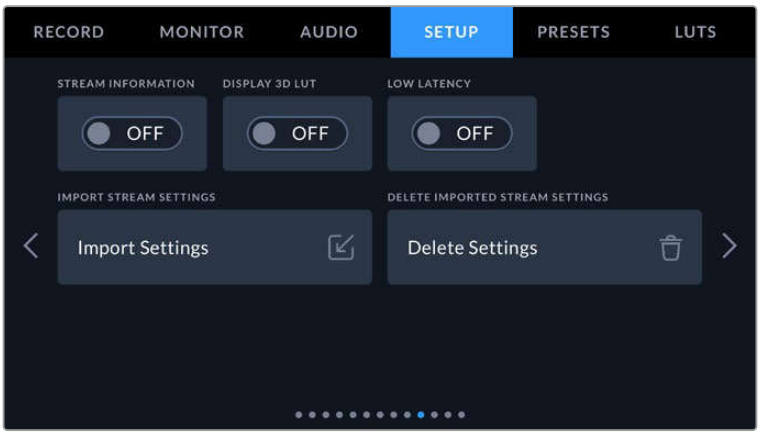

1 On the tenth page of your camera's setup menu, tap on the button labeled 'import settings'.

2 At the top of the screen, tap the card or drive where the xml settings file is saved. Tap the file name and then tap 'import'. After the setup file has been successfully imported, the ATEM Streaming Bridge will automatically be selected in your camera's platform menu.

All you need to do now is tap your camera's live stream button to turn the stream 'on'.

You can test your setup is working by getting the switcher operator at the studio to switch to your camera. You will see the tally light illuminate on the camera including a red tally border around the camera's LCD. When your camera is switched to the preview output, the tally will illuminate green.

Try adjusting the iris and pedestal in ATEM Software Control's camera page to test camera control

URSA Mini Shoulder Kit

Attaching the shoulder kit

The URSA Mini Shoulder Kit lets you carry your Blackmagic URSA Broadcast G2 on the shoulder for ENG style shooting. Most of the items in the URSA Mini Shoulder kit are shipped with your Blackmagic URSA Broadcast G2, including the shoulder pad, baseplate, top handle and viewfinder adapter plate. The URSA Mini extension arm and long LANC cable are available as optional accessories.

The quick release mount on the baseplate lets you lock your camera into an ENG style tripod plate or place it on your shoulder so you can follow the action.

The URSA Mini Shoulder Kit works with any tripod plate modeled after the Sony VCT 14. These mounts are easily found at camera stores or online.

It's also worth mentioning that mounts modeled after the VCT U14 tripod plate are a different system and are not compatible.

When attaching the Shoulder kit, you will need the following tools:

- 1 x flat head screwdriver for the 2 x ¼" shoulder mount base plate screws.
- 1 x 3/16" Hex key driver for the 2 x ¼" top handle screws.

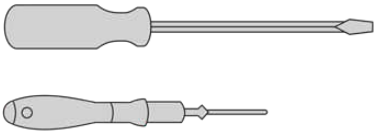

To attach the shoulder kit to your URSA Broadcast G2 you will need a large flat head screwdriver and a 3/16" Hex Key driver for the top handle

To attach the shoulder pad and baseplate

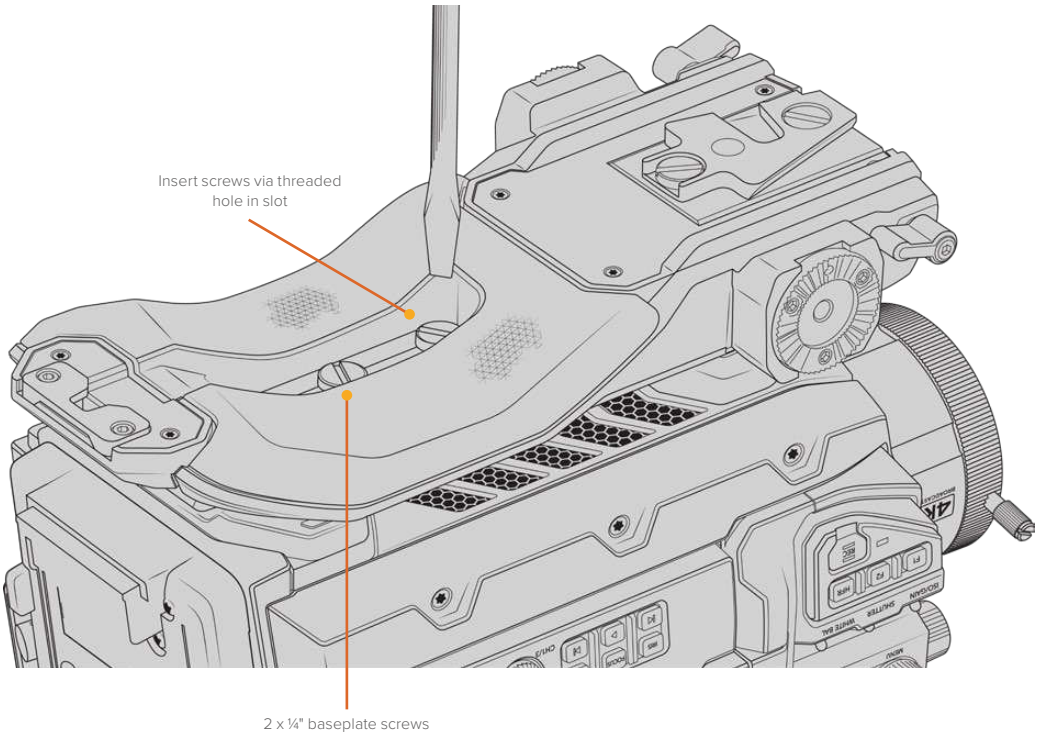

1 Gently place your URSA Broadcast G2 upside down on a flat, stable surface so you can easily access the base of your camera.

2 Fasten the shoulder kit baseplate to URSA Broadcast G2 using the 2 x 1/4” flat head screws and driver.

3 Tighten the screws until the baseplate is firmly attached and the screws won’t loosen. Avoid over-tightening as it may damage the screw threads.

To attach the top handle with URSA Viewfinder adapter plate

The top handle is supplied with URSA Viewfinder adapter plate already fitted. For information on installing the optional Blackmagic URSA Viewfinder, refer to the next section of this manual.

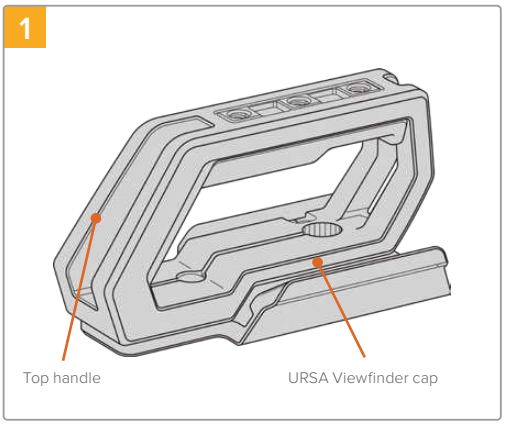

Place your URSA Broadcast G2 on a flat, stable surface so you can access the top of your camera.

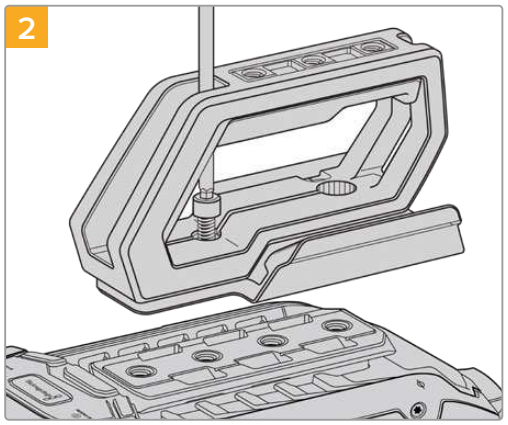

Fasten the handle to any two of your URSA Broadcast G2’s top 1/4" mounting points using the two supplied 1/4" screws with a 3/16" Hex key driver. URSA Broadcast G2’s rear two mounting points are recommended for most situations, but you can choose any pair for better weight balance when using large lenses.

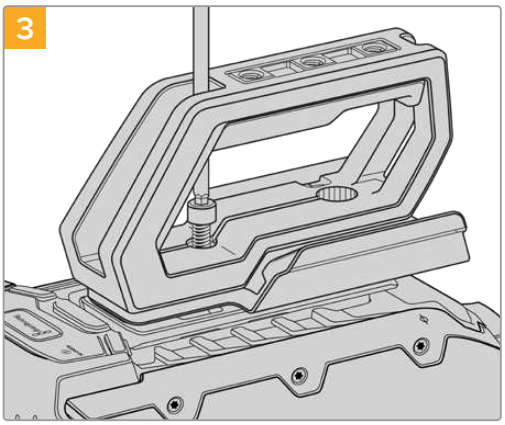

Tighten the screws until the handle is firmly in place and the screws won’t easily loosen. Avoid over-tightening the screws as it may damage the screw threads.

The URSA Mini Shoulder Kit extension arm and LANC cable are available as optional accessories.

Attaching the extension arm

B4 lenses typically feature a handgrip on the lens body, so a side handle isn't necessary when shooting with URSA Broadcast G2 on your shoulder.

If you have a different lens mount fitted, however, you may find it useful to fit the optional URSA Mini side handle on an extension arm for comfortable shoulder based shooting.

URSA Mini Shoulder Kit comes with an extension handle and longer LANC cable to move the optional side handle to a more ergonomic position.

To attach the side handle extension arm:

1. Place your URSA Broadcast G2 on a flat, stable surface allowing room next to the camera to lower the extension arm. Mounting URSA Broadcast G2 to a tripod is helpful for this purpose.
2. Attach the indented end of the extension arm to the baseplate rosette, lower the arm to suit, and fasten with the supplied rosette thumbscrew.
3. Attach the side handle to the extension arm's front rosette. Fasten by tightening the side handle screw with the large flat head screwdriver, or by twisting the D ring with your thumb and forefinger.
4. Connect the side handle LANC output to the camera LANC input using the long LANC cable supplied with your URSA Mini Shoulder Kit.

You can easily adjust the extension arm and side handle to suit your preference by loosening the rosette screws, making your adjustment, then retightening.

With your URSA Mini Shoulder Kit now attached, you have additional speed for fast shooting on the run, plus the ability to quickly mount your camera on a tripod for tight, stable shots!

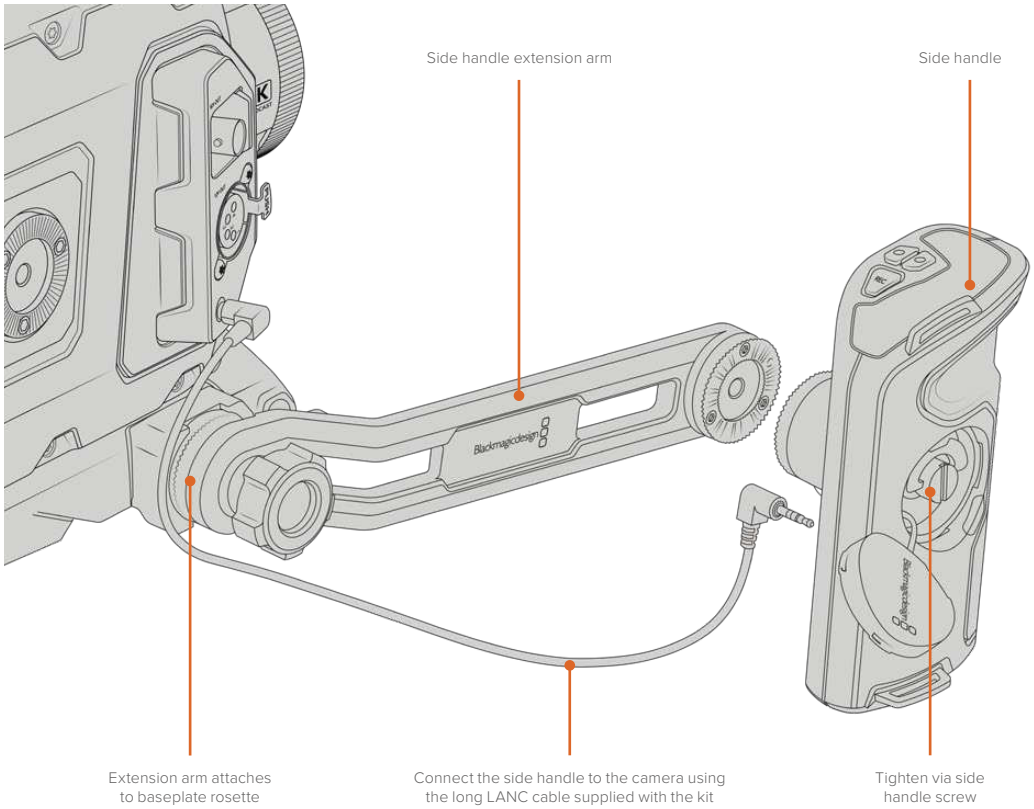

Blackmagic URSA Viewfinder

Blackmagic URSA Viewfinder is a powerful electronic viewfinder designed for your Blackmagic URSA Broadcast G2. The 1080HD color OLED display and precision glass optics provides a bright, vivid, and lifelike image so you can quickly find focus and see the finest detail in your images.

This viewfinder is perfect for handheld operation on the shoulder, or for environments where you need absolute precision with zero reflection and light glare, for example in extremely bright shooting conditions.

The viewfinder is connected and powered by the camera and uses the embedded SDI data from the camera to generate the various display options. This means that your camera can output a clean SDI feed to the viewfinder but still allows you to toggle various display options within the viewfinder for quick access to camera status, plus accurate information.

For example, if you select the '2.40:1' frame guide option in URSA Broadcast G2's menu, it will actually tell the viewfinder which frame guide is selected in the camera so when you toggle the frame guide display on the viewfinder, the same '2.40:1' frame guide is also displayed.

Mounting and Connecting to Blackmagic URSA Broadcast G2

Before mounting Blackmagic URSA Viewfinder to your URSA Broadcast G2, you will need to install the URSA Mini Shoulder Kit top handle that is included with your camera. Refer to the 'URSA Mini Shoulder Kit' section for more information.

Slide URSA Viewfinder mount into the URSA Viewfinder adapter plate and use the 1/4" thumbscrew included in URSA Mini Shoulder Kit to secure URSA Viewfinder to the top handle and adapter plate.

There is no need to use any tools to secure the thumbscrew, finger pressure is sufficient and will prevent over tightening.

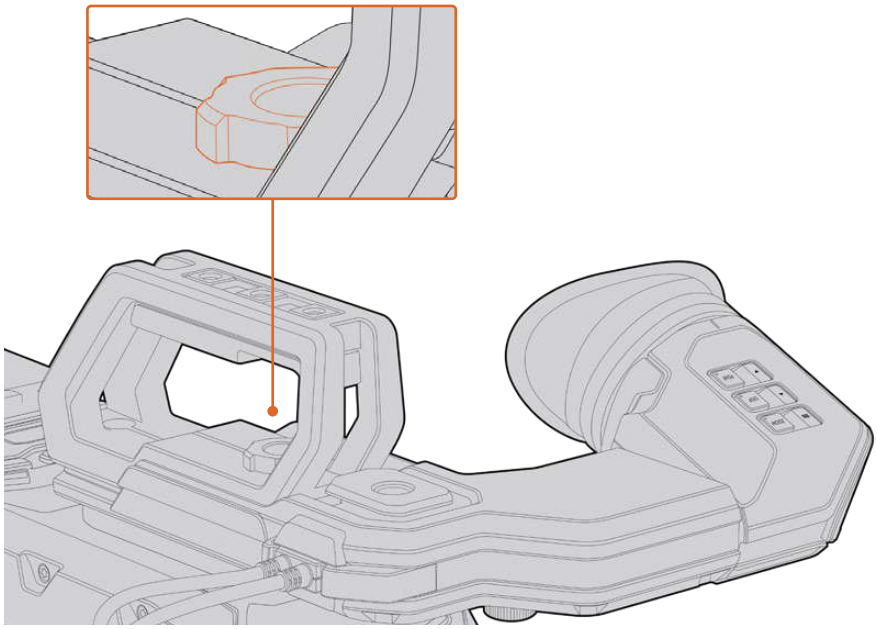

To mount your Blackmagic URSA Viewfinder to your URSA Broadcast G2, slide the viewfinder mount along your camera's handle ridges and tighten the thumbscrew to a ¼" mounting point

To connect your URSA Viewfinder to your URSA Broadcast G2, simply connect the viewfinder's attached cables to your camera's front 12V power and 3G-SDI outputs. The URSA Viewfinder will turn on automatically when your camera is powered.

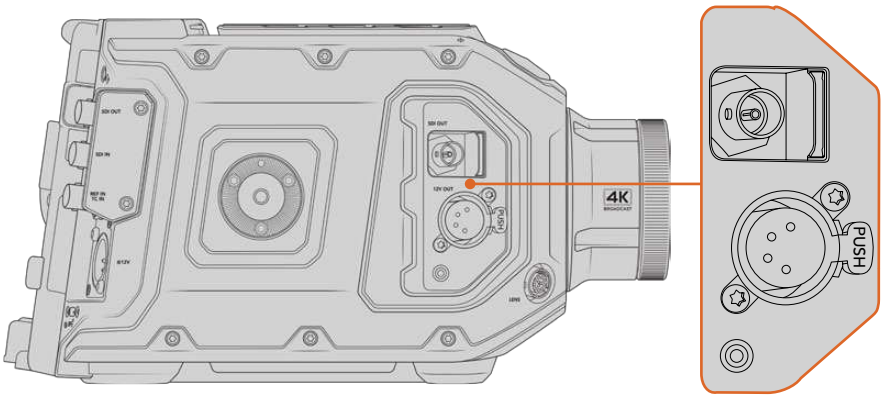

Connect your viewfinder's SDI and power cables to your URSA Broadcast G2's HD-SDI monitoring output and +12 volt output

Adjusting the Eyepiece

The detachable rubber eyepiece can be adjusted to fit your left or right eye. Adjust the viewfinder arm by loosening the knob on the bottom of the arm and sliding it left or right to comfortably fit your eye.

Button Features

On the top of the viewfinder you'll find the zoom, display and peak buttons. These buttons are used for zooming into your image, and turning overlays and focus peaking on or off.

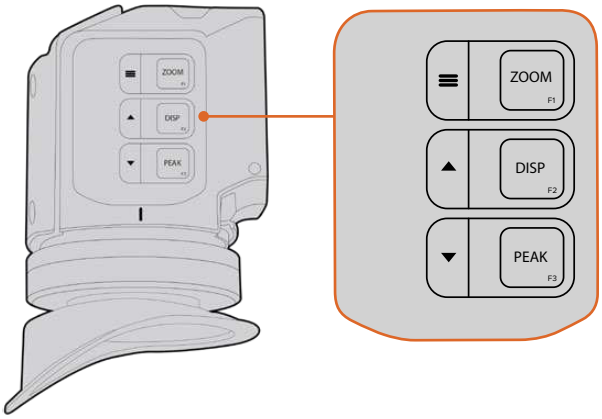

The Zoom (F1), Display (F2) and Peak (F3) buttons are located on top of the URSA Viewfinder

They are also used for additional features, such as opening the menu and navigating settings. Icons printed on the side of the buttons show you which buttons are used to control the viewfinder menu and navigation features.

The buttons also have a customizable function feature so you can assign shortcuts to quickly enable common features you may use frequently. For example you may wish to assign the false color feature to the zoom button. Refer to the 'shortcuts' section for more information.

ZOOM (F1) - 'menu'

The 'zoom' feature helps you find sharp focus by zooming into your picture. Press the 'zoom' button to zoom in and press again to return to 100% view. When using the settings menu, the 'zoom' button also serves as the 'menu' button. Press and hold this button to open the settings menu. In the settings menu, press this button once to confirm setting changes.

DISPLAY (F2) - 'up'

Press the 'display' button to see the overlay view. When using the settings menu, this button also serves as the 'up' button. You can also quickly open the 'shortcuts' menu setting by pressing and holding this button. Refer to the 'shortcuts' section for information on how to set shortcuts.

PEAK (F3) - 'down'

The focus peaking feature creates a green edge around the sharpest parts of the image so you can easily confirm your focus. Press the 'peak' button to turn the peaking feature on. Press again to turn peaking off. When using the settings menu, this button also serves as the 'down' button. You can also quickly open the 'setup' menu by pressing and holding this button.

Menu Settings

The settings menu contains three primary menu headings for display, shortcuts, and setup. To open the settings menu, press and hold the 'menu' ≡ button. Press the 'up' ▲ and 'down' ▼ button to navigate between the settings and press the 'menu' ≡ button again to confirm your selection.

Display

The 'display' menu provides the following features:

B&W

Switches between color and monochrome.

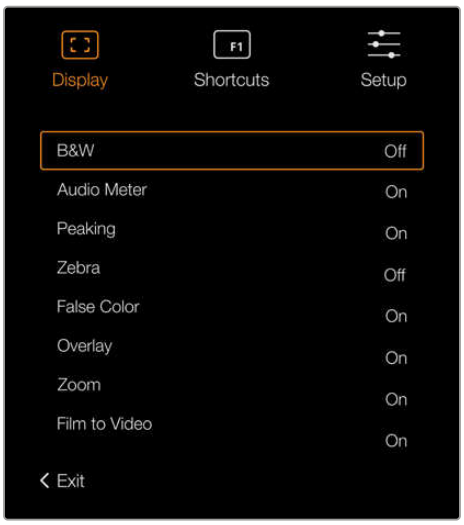

The 'display' menu in URSA Viewfinder

Meters

Switches between the types of meters to display in overlay view. The options are 'histogram', 'audio', 'both' or 'none'.

Peaking

Switches peaking on and off.

Zebra

Switches zebra levels on and off. Set your desired zebra levels using the camera settings. For more information, refer to the 'settings' section in this manual.

False Color

Switches the false color feature on and off. False color overlays different colors onto your image that represent exposure values for different elements in your image. For example, pink represents optimum exposure for lighter skin tones, while green is a good match to darker skin tones. By monitoring the pink or green false color when recording people, you can maintain consistent exposure for their skin tones. Similarly, when elements in your image change from yellow to red, that means they are now over exposed.

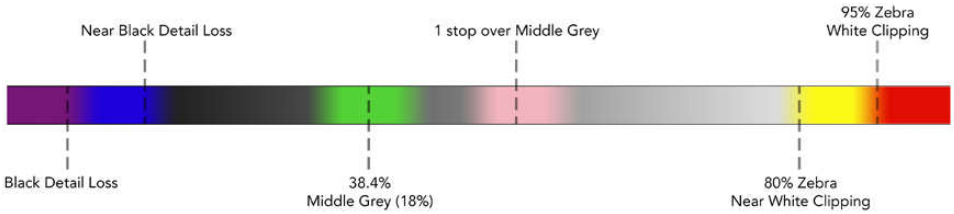

False Color Chart

Overlay

Switches overlays on and off. You can select which types of overlay to display in your viewfinder's 'setup' menu. The style of these overlays, such as the safe area percentage, are set in your camera.

Zoom

Turns the zoom feature on and off.

Film to Video

Switches between film and video display mode. Refer to the 'record settings' section in this manual for information on film and video mode. This setting is only available when your camera is outputting 'film' images to your viewfinder. It is disabled when receiving 'video' images to prevent applying a LUT over a LUT.

Shortcuts

The shortcut function is useful when you need to quickly access a particular setting for a frequently used feature. To customize your shortcut buttons:

1. In the 'shortcuts' menu, press the 'up' ▲ or 'down' ▼ button to move up or down and select one of the 3 buttons to make it your shortcut button. Press the 'menu' ≡ button to confirm your selection.
2. Press the 'up' ▲ or 'down' ▼ button to toggle and select one of the features below to assign to the shortcut button. Press the 'menu' ≡ button to confirm your selection.

- B&W
- Peaking
- Zebra
- False Color
- Display
- Zoom
- Film to Video
- Meters
- Focus Chart

3 Scroll to ‘exit’ and press the ‘menu’ button to close the menu display view.

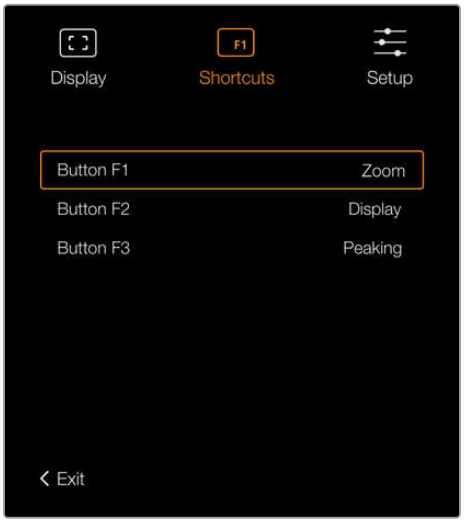

The ‘shortcuts’ settings in URSA Viewfinder

Setup

The ‘setup’ menu provides the following features:

Brightness Adjustment

Allows adjustments for the brightness of the display with range -10 to +10.

Tally Brightness

Allows adjustments of tally LED brightness.

Focus Chart

Your Blackmagic URSA Viewfinder has a built in focus chart so you can focus the eye piece to suit your eyes. Simply turn the focus diopter on the eyepiece until the chart is in perfect focus. Pressing any button on your viewfinder will close the focus chart display.

Frame Guides

Toggles the appearance of frame guides. When ‘frame guides’ are turned ‘on’ in your URSA Broadcast G2’s ‘front SDI’ monitor settings, you can use this setting to toggle the appearance of these guides in your Blackmagic URSA Viewfinder.

For more information, see the ‘Monitor Settings’ section in this manual.

Safe Area Guide

Toggles the appearance of a safe area guide. When ‘safe area guide’ is turned ‘on’ in your URSA Broadcast G2’s ‘front SDI’ monitor settings, you can use this setting toggle its appearance in your Blackmagic URSA Viewfinder.

For more information, see the ‘Monitor Settings’ section in this manual.

Grid

Toggles the appearance of a rule of thirds grid, crosshair or center dot. When ‘grids’ are turned ‘on’ in your URSA Broadcast G2’s ‘front SDI’ monitor settings, you can use this setting toggle their appearance in your Blackmagic URSA Viewfinder.

For more information, see the ‘Monitor Settings’ section in this manual.

NOTE Enabling ‘Grid’ in your URSA Viewfinder setup menu will also allow your viewfinder to display tally signals sent from an ATEM switcher. Overlays must also be set to ‘on’ in the display menu.

Status Text

Toggles the appearance of status text, such as white balance, frame rate and ISO. When ‘status text’ is turned ‘on’ in your URSA Broadcast G2’s ‘front SDI’ monitor settings, you can use this setting toggle its appearance in your Blackmagic URSA Viewfinder.

For more information, see the ‘Monitor Settings’ section in this manual.

TIP When using Blackmagic Viewfinder with URSA Broadcast G2, the appearance of status text can clash if both the viewfinder and camera are set to show status text. In this situation, we recommend turning status text to ‘on’ in your camera, and status text to ‘off’ in your viewfinder.

IR Sensor

The IR Sensor on your viewfinder automatically detects when you are near the eyepiece and turns on the OLED display. If you are away from the viewfinder for over twenty seconds in standby mode, display turns off to conserve power and to extend the life of the OLED display. While recording, the timeout sensor is extended to 5 minutes, at which point the OLED display will be slowly dimmed. Any movement in front of the eyepiece will reset this timer. The viewfinder will detect when you look into the viewfinder eyepiece, pressing any button on the viewfinder will also turn the display back on.

Deliberately blocking or covering the IR sensor could cause the viewfinder’s display to remain powered for prolonged periods of time. This could decrease the lifespan of the display and cause image retention if high contrast images or frame guides are displayed on the viewfinder.

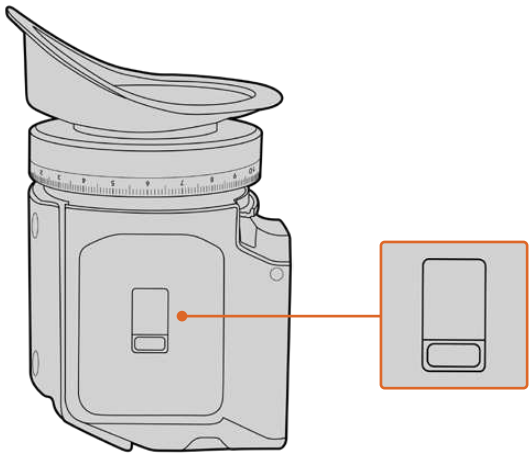

The IR sensor is located at the bottom of the URSA Viewfinder

Updating URSA Viewfinder's Internal Software

Update your viewfinder using the Blackmagic Camera Setup utility software. The viewfinder will need to be powered when updating, so we recommend keeping the viewfinder connected to your URSA Broadcast G2 during the update process. This also means your URSA Broadcast G2 will need to supply consistent power, so be sure to plug into external power.

Connect your computer to the small USB connection located at the front of your viewfinder, near the eyepiece. When Blackmagic Camera Utility is launched and your viewfinder is connected to your computer, you will be prompted to update if your computer detects that your viewfinder is using an older version. Follow the on screen prompts to update your viewfinder's internal software.

NOTE When using your Blackmagic URSA Viewfinder with URSA Broadcast G2, we recommend updating your viewfinder's internal software to the latest version to ensure compatibility. The latest software can be found at the Blackmagic Design support center at www.blackmagicdesign.com/support. Refer to the 'Blackmagic Camera Setup Utility' section in this manual for more information.

TIP We recommend updating all your Blackmagic URSA equipment at the same time for optimized performance.

Blackmagic URSA Studio Viewfinder

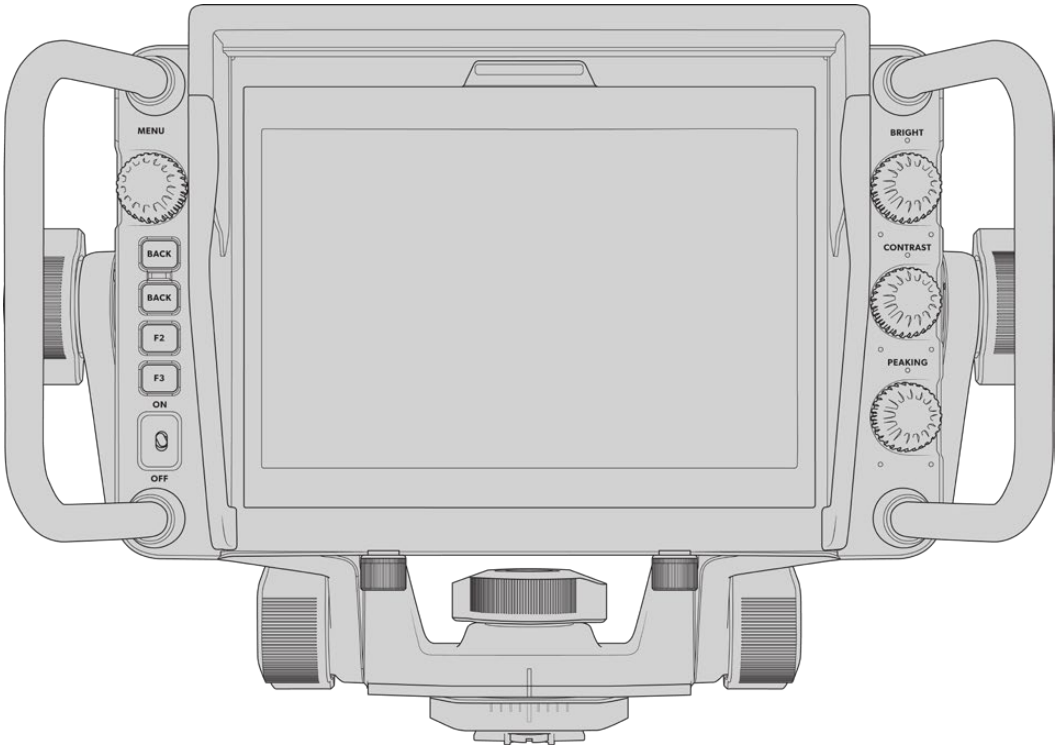

Blackmagic URSA Studio Viewfinder is a powerful viewfinder that allows you to turn your Blackmagic URSA Broadcast G2 into a professional live production camera. The studio viewfinder features a bright 7” screen and has a large easily viewable tally light, control knobs, large handles, sun hood and variable tension articulated mount. These features make it easy to stand behind the camera and comfortably follow the action for extended periods of time, especially when filming live concerts, sports, and other long events. The URSA Studio Viewfinder is perfect for professional live production in the studio or on location.

Mounting and Connecting to Blackmagic URSA Broadcast G2

When using the Blackmagic URSA Studio Viewfinder with Blackmagic URSA Broadcast G2, you have the option of mounting the unit to the camera in a number of ways.

Using the supplied VLock mount plate you can mount the Blackmagic URSA Studio Viewfinder directly to the top of your URSA Broadcast G2 or to the top handle of the URSA Mini Shoulder Kit that is included with your camera.

Attach the V-lock mount plate to the top of the camera with the supplied 1/4” screws. As this will make the center of gravity on the camera much higher. We recommend doing this while the camera is attached to a tripod for stability.

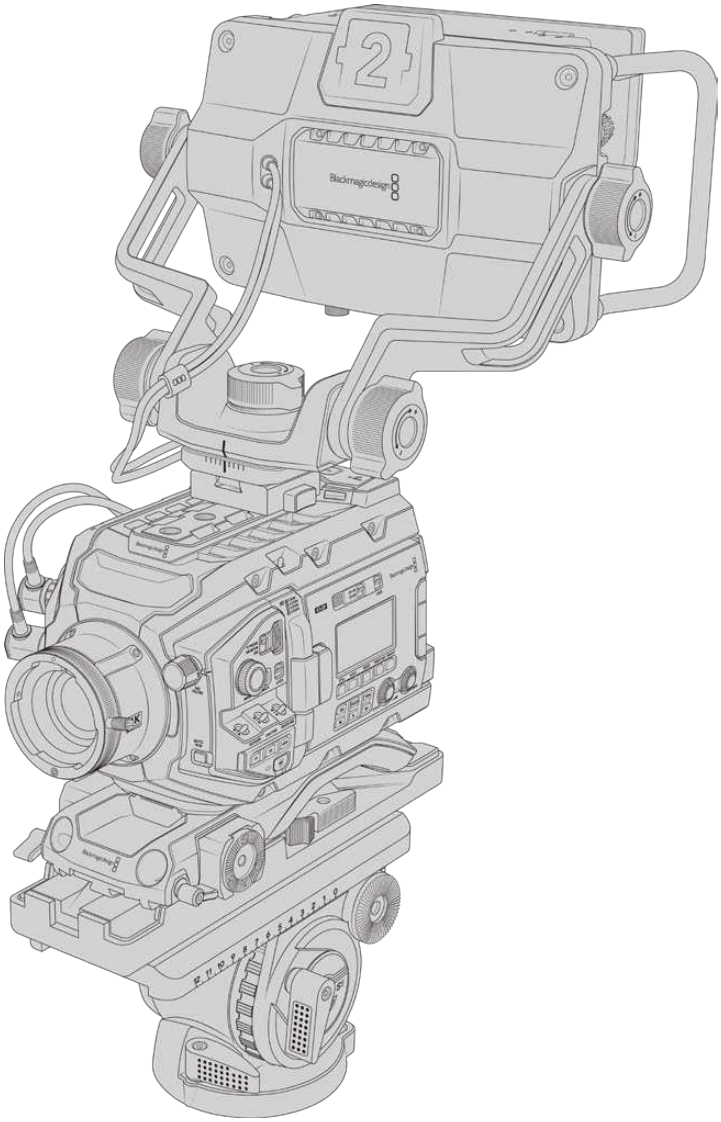

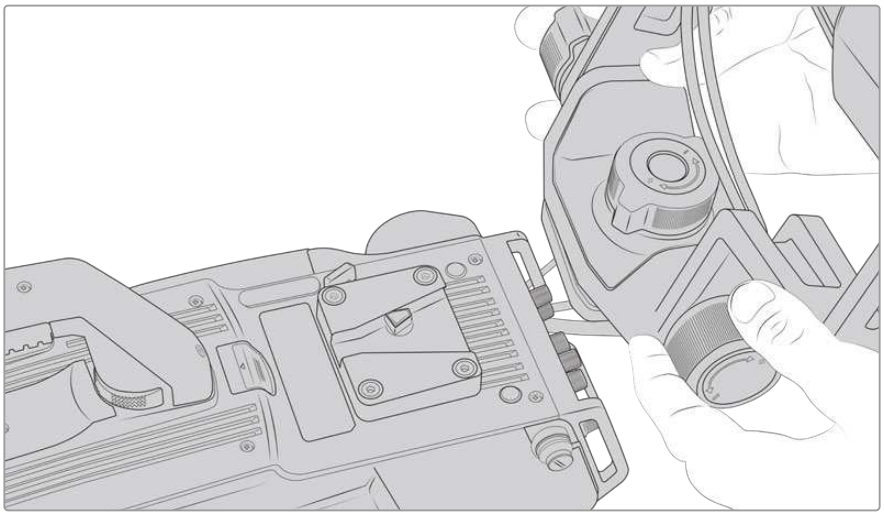

V-Lock mount plate being attached to 3rd party camera

The V-Lock mount plate can also be installed on any camera you want to use the URSA Studio Viewfinder with that has 1/4” mounting points, or by using a third party cheese plate. You can also mount the Blackmagic URSA Studio Viewfinder to a third party camera system that has an existing V-lock mount plate as many of them have this quick release plate on them already.

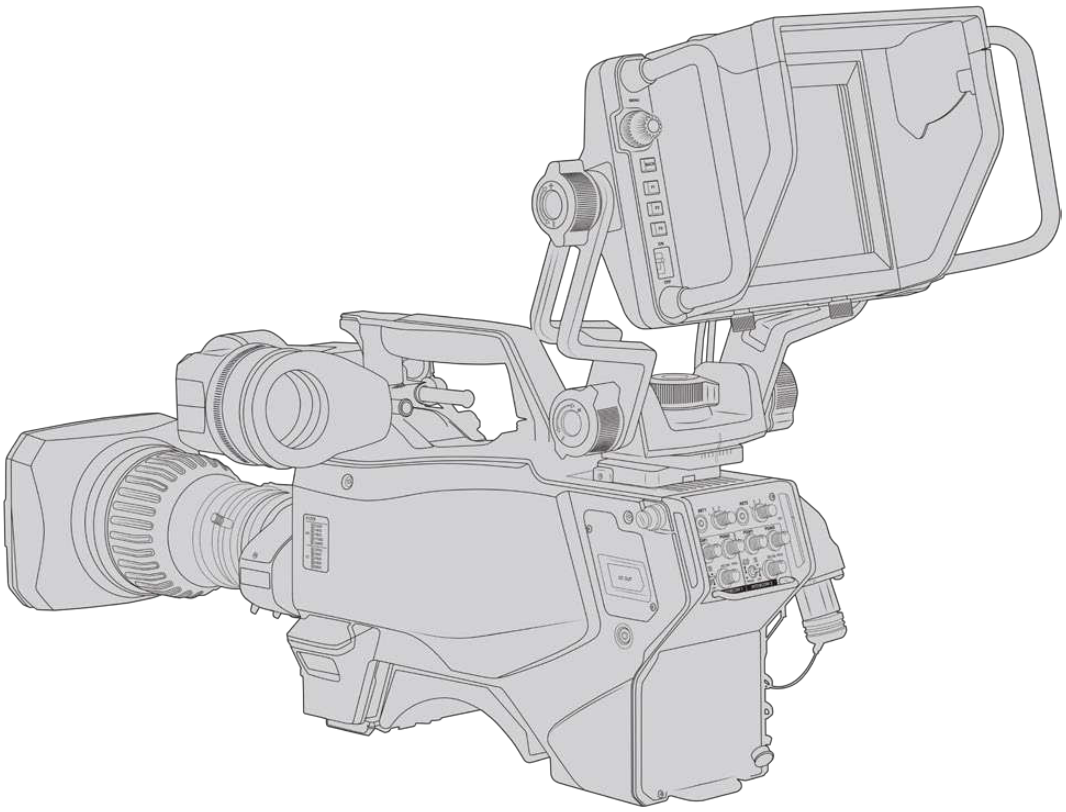

To connect your Blackmagic URSA Studio Viewfinder to your URSA Broadcast G2, simply connect the viewfinder's attached cables to your camera's front 12V power and 3G-SDI outputs.

The power switch on the viewfinder will then allow you to turn on the viewfinder instantly when your camera is powered. Note that there are cable clamps on the side of the URSA Mini handle mount to keep you cables neat and hold the cables in place.

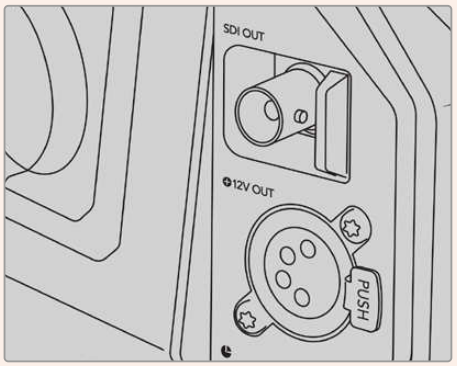

SDI and 12v power connections on URSA Broadcast G2

TIP The URSA Studio Viewfinder uses open standard SDI and broadcast 4 pin XLR power connections so it can be used with any other camera or even as an adjustable portable location monitor. It also uses the open standard ATEM tally and device control protocol so any other camera system can add this information to their SDI stream to allow them to work with the tally and overlays on the URSA Studio Viewfinder.

Adjusting the Blackmagic URSA Studio Viewfinder

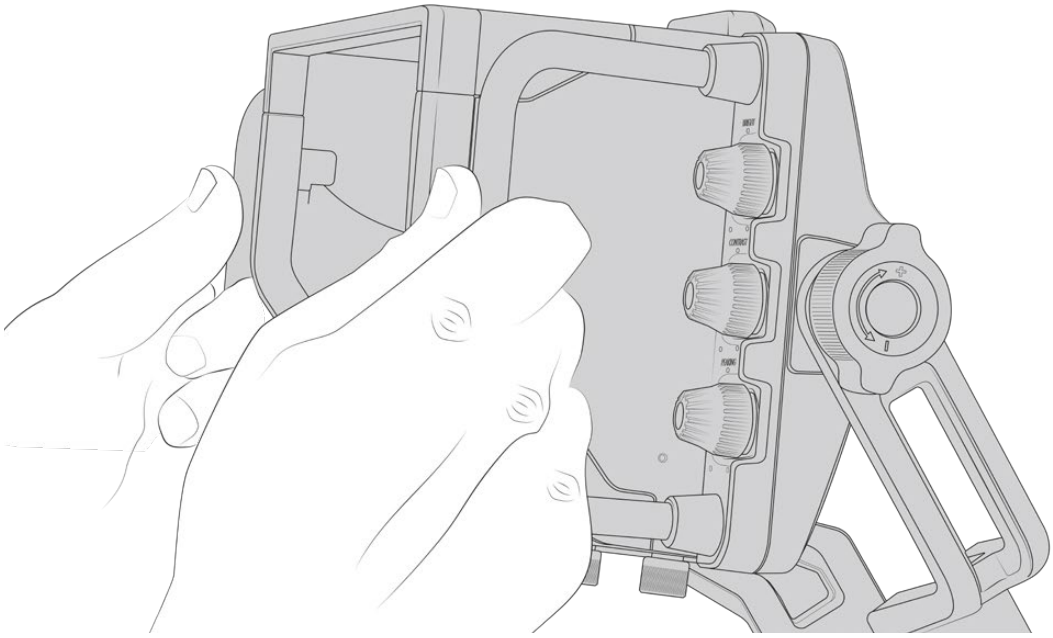

The Blackmagic URSA Studio Viewfinder features large handles and variable tension articulated mounting that allow you to adjust the position and angle of the viewfinder. The large handles allow you to quickly and easily take hold of the viewfinder and adjust the angle and direction of the unit. Combined with the sun hood the handles also help to protect the screen from damage, which means that you can store the fully assembled Blackmagic URSA Studio Viewfinder in a carry case without disassembly. The large handles also allow you easily to pick up and carry the unit between locations.

The supplied mount features tension dials for pan and tilt, with additional tension dials on either side of the viewfinder for additional friction control. The left hand dial allows you to adjust the drag friction of the arm and the right hand dial allows you to lock the Viewfinder in place once you have found the angle you require.

These tension dials have a very large range of tension adjustment, allowing you to select a specific amount of resistance. This allows you to easily pan and tilt the viewfinder to the precise position you require.

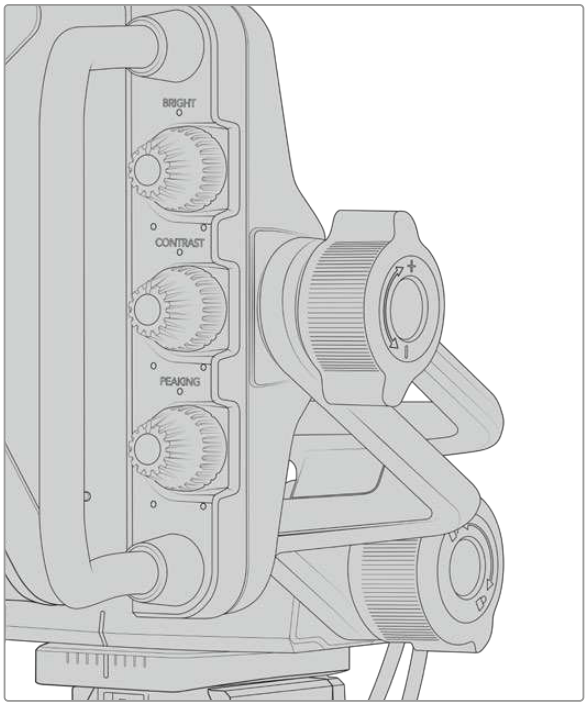

Tension dials on either side of the viewfinder

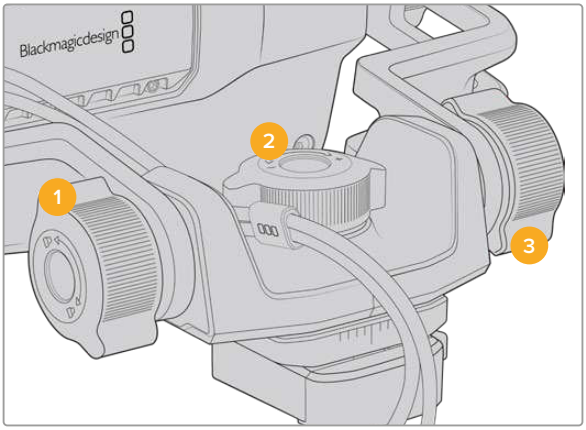

1 **Tilt Lock Dial**
Locks the angle of tilt on the viewfinder mechanism.

2 **Pan Tension Dial**
Controls pan tension.

3 **Tilt Tension Dial**
Controls tilt tension.

TIP The center tension dial on the supplied mount controls pan tension, and can be loosened to allow you to take hold of the viewfinder and move the camera independently. This means that you can film things like motorsport, where you need to pan the camera left and right to follow the action, whilst holding the viewfinder positioned towards your eyes. A visual guide on the mount helps to ensure that the viewfinder can easily be returned to the center.

Sun hood

The sun hood helps you to see the screen in bright or sunny conditions. To attach the sun hood, slide it over the top of the Blackmagic URSA Studio Viewfinder and push it into place, securing it with the two captive screws on the base of the sun hood. The top section of the visor is adjustable, and can raise and lower to provide additional viewing angles. The sun hood provides additional protection for the 7” screen, and can be removed quickly and easily if desired or to access the USB-C connector for software updates.

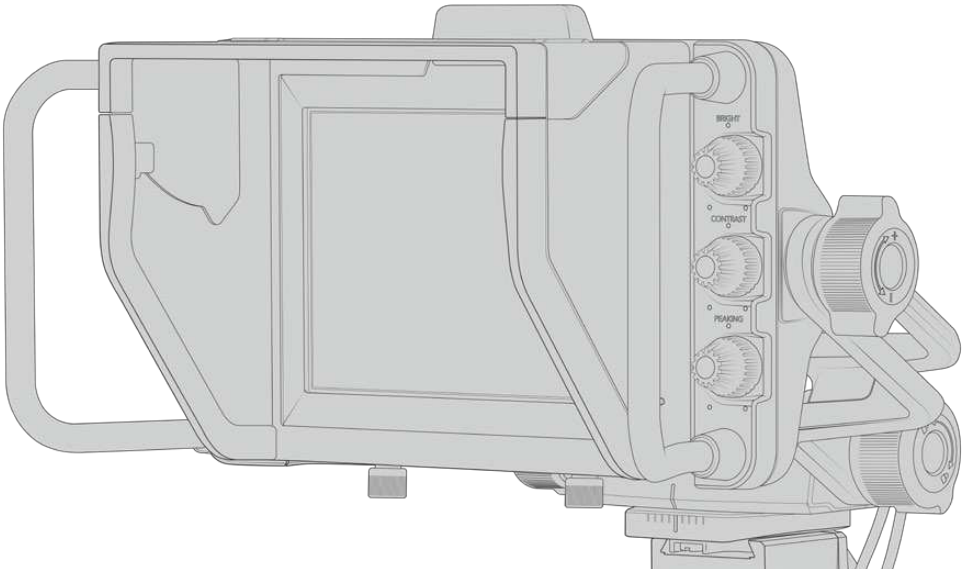

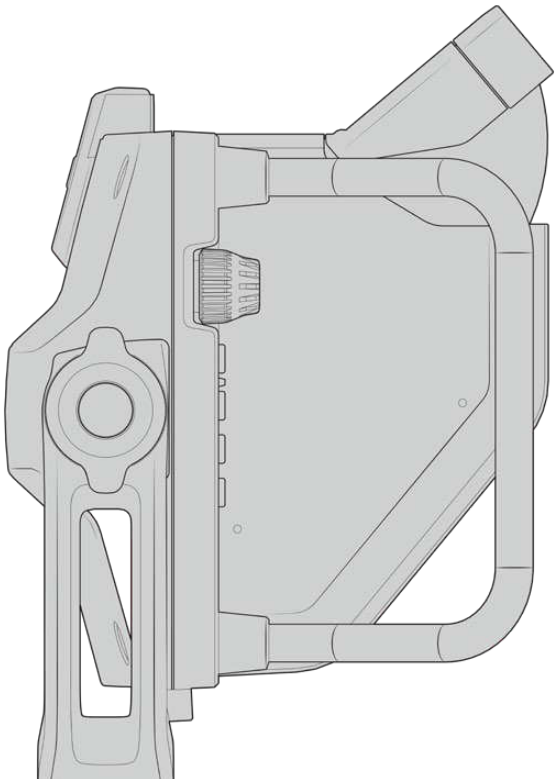

Sun hood and adjustable visor

Button Features

The dials down the right hand side let you change brightness, contrast, peaking quickly and easily. The dials are ergonomically designed so you can adjust the dials from the side with your thumb when using the sun hood, or with two fingers for finer more controlled adjustment.

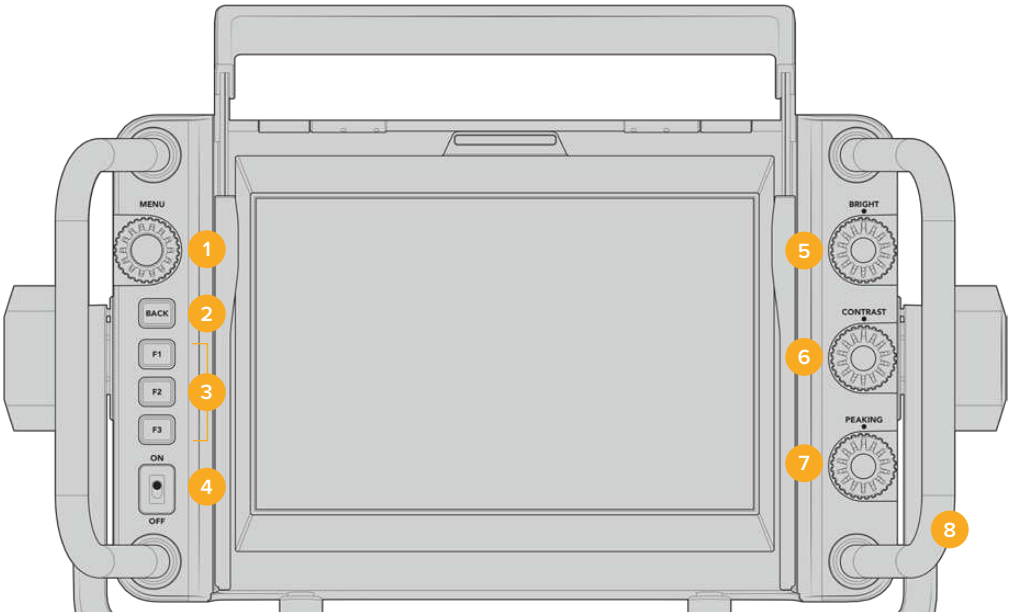

1 **Menu Dial**
The push button 'menu' dial allows you to enter the menu, and navigate through the viewfinder settings.

2 **Back button**
Exits the menu system

3 **F1, F2, F3**
Assignable function buttons. You can assign functions to these buttons for easy access to your most commonly used functions.

4 **ON/OFF switch**
Switches the Blackmagic URSA Studio Viewfinder on and off.

5 **Bright**
Adjusts the brightness of the image on screen. Overlays on screen will show the brightness level on a scale of -100 to +100.

6 **Contrast**
Adjusts the contrast of the image on screen. Overlays on screen will show the contrast level on a scale of -100 to +100.

7 **Peaking**
Adjusts the focus peaking level for the image on screen. Overlays on screen will show the peaking level on a scale of -100 to +100. In the setup menu you can select between various styles of peaking to suit your environment. There is the option for the traditional style of focus peaking that many will be familiar with from other broadcast systems, as well as the option to use colored lines for focus. As with URSA Broadcast G2 you have the option of 'red', 'green', 'blue', 'black' and 'white' lines which gives you flexibility to make them easily viewable when shooting in environments that have a lot of a particular color.

8 **Handles**
The built in handles are large and allow you to hold the Studio Viewfinder in place as you reposition the camera while shooting. They also provide protection for the screen when setting up and packing down.

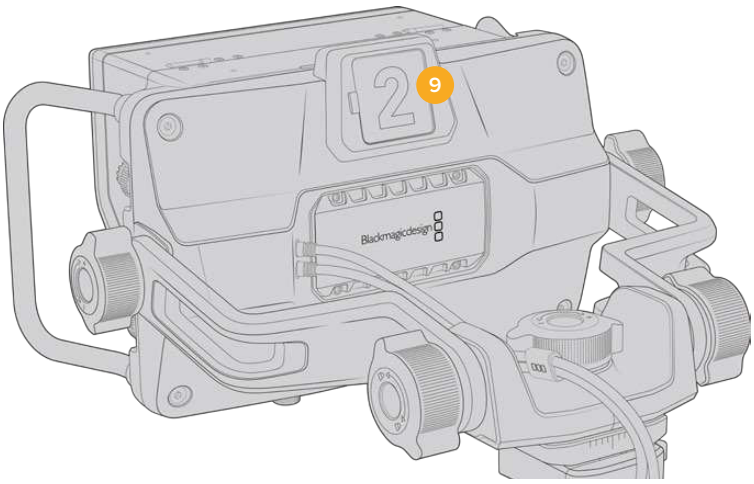

9 Tally Light

The large tally light on the rear of the Blackmagic URSA Studio Viewfinder lets both the talent and operator know which camera is on the air, which camera is about to be on air, and if they are ISO recording. The tally illuminates red for on-air, green for preview and when used with URSA Broadcast G2 will illuminate yellow for ISO record.

As the director cuts between cameras on the ATEM switcher, tally information is sent back to the camera over SDI so the light is lit when the camera is being previewed to switch to, on the air or recording. In addition, the URSA Studio Viewfinder also includes clip-on transparent camera numbers that attach to the tally light, making it easy for talent to clearly see camera numbers from up to 20 feet away.

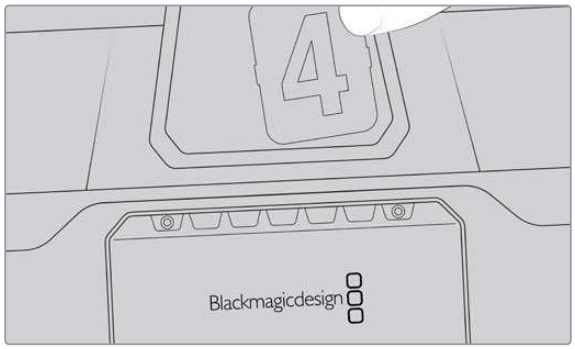

We have included editable PDF's in the software installer that allows you to edit and print out your own tally numbers to match the ones provided, and also to create your own custom tally number inserts. After installing the Blackmagic cameras software these can be found on a Mac in the Application > Blackmagic Cameras > Documents folder and on a PC in the Blackmagic Design > Documents folder.

The tally light will illuminate according to the ATEM switching operations, and when the camera is not connected to a switcher the tally light will illuminate red as a simple record tally indicator. Refer to the 'Understanding Studio Camera Control' section in this manual for more information.

TIP When using the Blackmagic URSA Studio Viewfinder with an ATEM switcher, it is important to select 'clean feed' on URSA Broadcast G2 to ensure that you don't see overlays or the focus box on the SDI output to the ATEM switcher. Navigate to the 'monitor' menu on URSA and select 'clean feed' for 'main SDI'.

Menu Settings

The push button 'menu' dial allows you to enter the menu by pressing it, whilst rotating the dial navigates up and down through the menu options. Pressing the 'menu' dial whilst a menu heading is highlighted, will allow you to switch between the display, shortcuts, setup and cursor sub menus. Rotating the dial will scroll through the settings in each menu. Pressing the dial when a setting is highlighted allows you to adjust that setting by rotating the 'menu' dial. Confirm your selection by pressing the 'menu' dial once more. You can exit out of the menu by hitting the 'back' button or by navigating to and selecting exit.

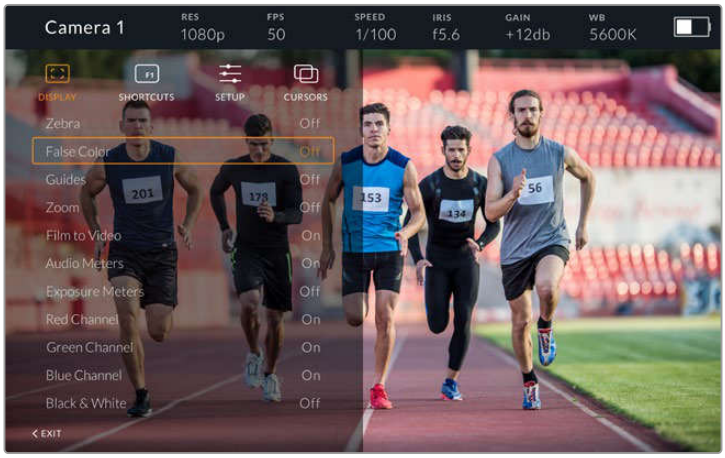

Display

Zebra

Switches zebra levels on and off. The level of zebra will be determined by the setting on your URSA Broadcast G2, in the third page of the 'Monitor' settings menu. When the Studio Viewfinder is not connected with URSA Broadcast G2, the zebra level will represent 95% of the luminance levels of a Rec 709 signal. For more information, refer to the 'settings' section in this manual.

False Color

Switches the false color feature on and off. False color overlays different colors onto your image that represent exposure values for different elements in your image. For example, pink represents optimum exposure for skin tones. By monitoring the pink false color when recording people, you can maintain consistent exposure for skin tones. Similarly, when elements in your image change from yellow to red, that means they are now over exposed. False color is a good feature to assign to one of the function buttons, as it provides quick and easy access to a commonly used reference tool for exposure.

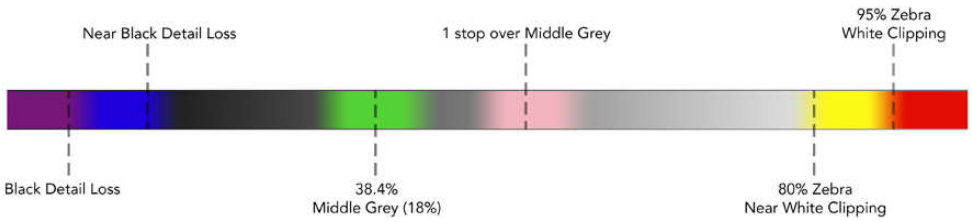

False Color Chart

Guides

This setting gives you the option to show or hide your guides. The guides will match the style of guides that have been set in the URSA Broadcast G2, in the fourth page of the 'Monitor' settings menu.

The aspect ratio, frame guide opacity level, safe area percentage, and the type of grids shown will match what you have set in the camera. The 'setup' menu in the Studio Viewfinder then allows you to configure which type of guides you would like to see in the Studio Viewfinder when guides in the display menu are switched on. Guides then allows you to then switch these 'on' or 'off' with one command.

Zoom

Turns the 'zoom' feature on and off. The 'zoom' feature helps you find sharp focus by zooming into your picture. When zoomed in, you can navigate to specific parts of the screen by rotating the menu dial left and right. The overlay will indicate which part of the picture you are zoomed into.

Film to Video

When sending a 'film' dynamic range SDI signal from your URSA Broadcast G2, the 'film to video' setting allows you to apply a more colorful and contrasty LUT to the image. This setting will only be available when 'film' dynamic range is detected and will otherwise be grayed out to prevent the wrong LUT being applied to the image.

Audio Meters

The audio meters display the audio level that is being input via SDI into the Blackmagic URSA Studio Viewfinder, therefore the meters will show you URSA Broadcast G2's audio input levels. If you have program input selected, the audio meter will display these audio levels.

Exposure Meters

Switches the display of the histogram 'on' or 'off'.

Red Channel

Allows you to switch on or off the red channel of your image.

Green Channel

Allows you to switch on or off the green channel of your image.

Blue Channel

Allows you to switch on or off the blue channel of your image.

Black and White

Switches between color and monochrome.

Shortcuts

The shortcut function allows you to map specific functions to the F1, F2 and F3 buttons. These shortcut buttons allow you to quickly toggle 'on' and 'off' any of the settings in the display menu, or your cursors. This is extremely useful when you need to quickly access a particular setting for a frequently used feature.

To customize your shortcut buttons: In the 'shortcuts' menu, rotate the push button 'menu' dial to move up or down and select one of the 3 buttons. Press the 'menu' dial to confirm your selection and then rotate the 'menu' dial to scroll through the assignable features. You will have the option to select one of the following features: 'zoom', 'cursor 1', 'cursor 2', 'cursor 3', 'zebra', 'false color', 'guides', 'film to video', 'audio meters', 'exposure meters', 'red channel', 'green channel', 'blue channel', 'black and white'. Once chosen click the menu button to confirm

that selection, and assign that function to the chosen shortcut button. Pressing the shortcut button will now switch this feature ‘on’ and ‘off’.

Once you have set up your shortcuts as required you can either scroll to ‘exit’ and press the ‘menu’ dial to close the menu display view, or hit the back button to exit out of the menu.

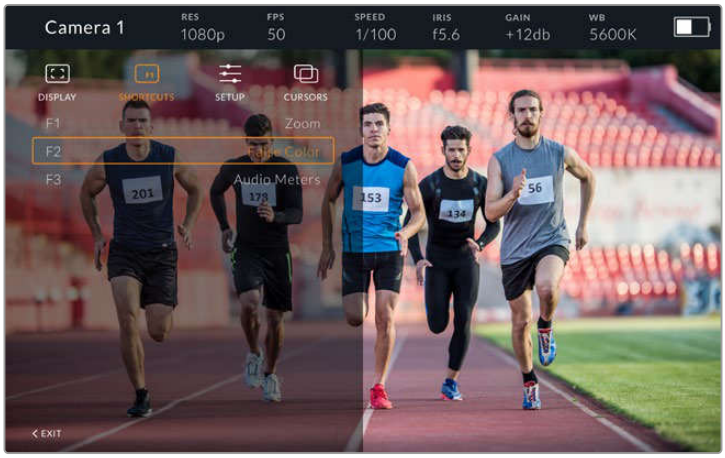

The ‘shortcuts’ submenu

Setup

The ‘setup’ menu is where you choose your preferences for how the viewfinder is setup.

Front Tally Brightness

Allows adjustments of tally LED brightness between ‘off’, ‘low’, ‘medium’ and ‘high’. The tally light will illuminate whilst adjustments are being made so you can see what each brightness level represents.

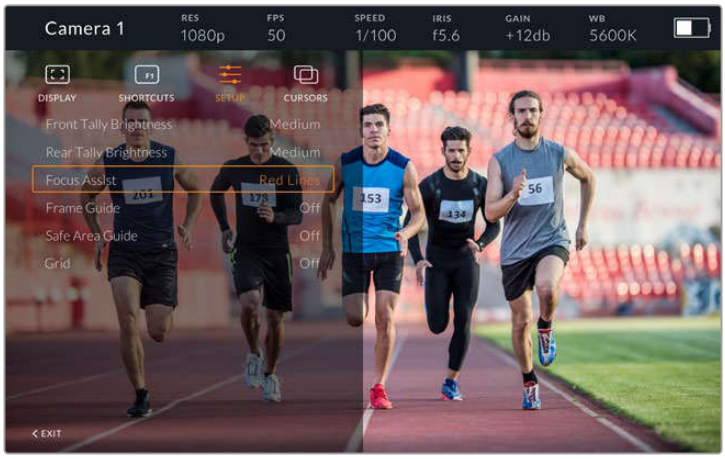

The ‘setup’ submenu

Rear Tally Brightness

Allows adjustments of tally LED brightness between ‘low’, ‘medium’ and ‘high’. The tally light will illuminate whilst adjustments are being made so you can see what each brightness level represents.

TIP A high LED brightness setting is recommended for bright conditions, as it will provide greater visibility for talent and operators in the conditions. A low LED

brightness is recommended when filming in darker environments where it is easier to see when the light is on.

Focus Assist

The ‘focus assist’ setting toggles the appearance of peaking on the viewfinder. You have the choice of ‘red’, ‘green’, ‘blue’, ‘black’ and ‘white’ as well as traditional peaking.

Frame Guide

Gives you the option to show ‘frame guides’ as part of your Studio Viewfinder’s ‘Guides’. When connected to URSA Broadcast G2 they will match your camera’s ‘frame guides’ aspect ratio. When connected to other systems they will default to the 14:9 aspect ratio.

Safe Area Guide

Gives you the option to show the ‘safe area’ indicator as part of your Studio Viewfinder’s ‘Guides’. When connected to URSA Broadcast G2 these will match your camera’s ‘safe area guide’ percentage. When connected to other systems they will default to 90%.

Grid

Gives you the option to show grids as part of your Studio Viewfinder’s ‘Guides’. When connected to URSA Broadcast G2 these will match your camera’s ‘grids’ settings. When not connected, this will switch your crosshairs on or off.

LCD Brightness

If you have the updated model of URSA Studio Viewfinder then the LCD Brightness setting will appear at the bottom of the setup menu. This adjusts your Studio Viewfinder LCD backlight brightness.

Cursors

The cursors allow you to mark an area on screen where graphics like a lower third, graphic, logo or ticker will be overlaid. To adjust these cursors go to ‘cursors’ and select ‘edit cursors’. This will bring up a page that shows you all three cursors and allows you to select each one individually and then dial in the width, height, x and y co-ordinates for positioning each one individually.

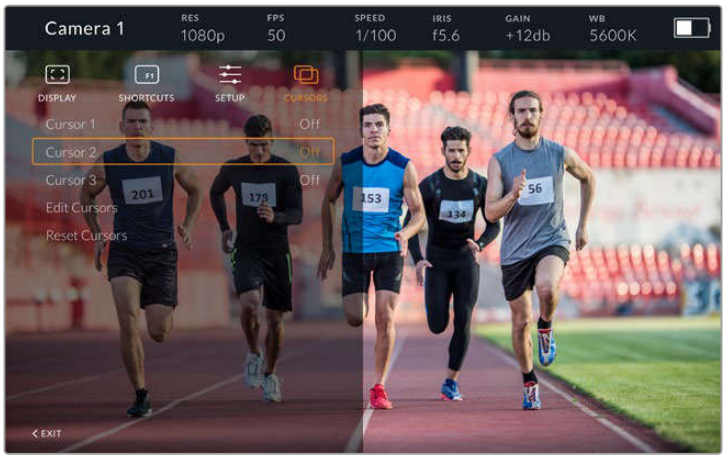

The cursors submenu

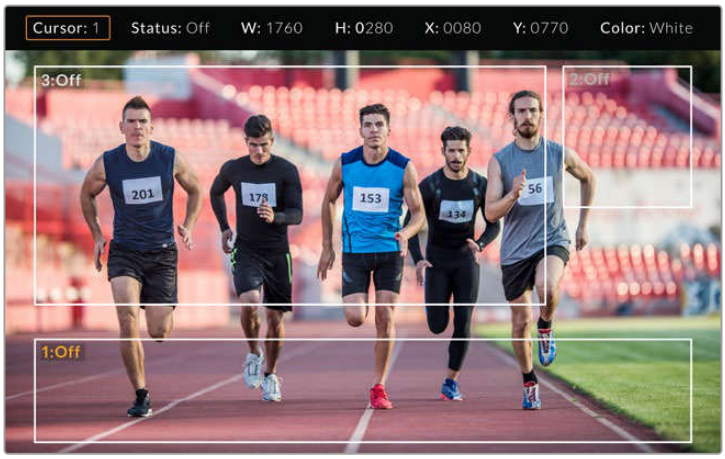

Cursors displayed on screen

Once you have set them up they can be switched on or off from the 'cursors' menu or assigned to your function keys for quick access. This is important for live production, as it allows the camera operator to take this into consideration and accurately compose and frame shots. You can create up to three black or white custom cursors that can have variable height, width and position, making it easy to match the size and location for all the graphics that will be added live or during later broadcast. You also have the option to reset the cursors to their default state.

Using a headset with the Blackmagic URSA Studio Viewfinder

When using the Blackmagic URSA Studio Viewfinder with URSA Broadcast G2, the headphone connection on the camera will now become a talkback headset connection, allowing for direct communication with the director.

For more advanced talkback functionality, you can also use Blackmagic Camera Fiber Converter and Blackmagic Studio Fiber Converter to allow you to use standard broadcast headsets with 5 pin XLR connectors. For more information, refer to the 'Blackmagic Fiber Converters' section in this manual.

TIP Because URSA Broadcast G2's headphone socket is iPhone headset compatible, you can use your iPhone headset to communicate with the director. Pushing the button on the built-in remote will allow you to talk back to the director.

Updating URSA Studio Viewfinder's Internal Software

Update your viewfinder using the Blackmagic Camera Setup utility software. The viewfinder will need to be powered when updating, so we recommend keeping the viewfinder connected to your URSA Broadcast G2 during the update process. This also means your camera will need to supply consistent power, so be sure to plug into external power.

Remove the sun hood to provide access to the small USB-C connection located on the bottom of the Blackmagic URSA Studio Viewfinder, and connect your computer to the USB-C port. When Blackmagic Camera Utility is launched and your viewfinder is connected to your computer, you will be prompted to update if your computer detects that your viewfinder is using an older version. Follow the on screen prompts to update your viewfinder's internal software. Refer to the 'Blackmagic Camera Setup Utility' section in this manual for more information.

We recommend updating all your Blackmagic URSA equipment at the same time for optimized performance.

NOTE When using your Blackmagic URSA Studio Viewfinder with URSA Broadcast G2, we recommend updating your viewfinder's internal software to the latest version to ensure compatibility. The latest software can be found at the Blackmagic Design support center at www.blackmagicdesign.com/support. Refer to the 'Blackmagic Camera Setup Utility' section in this manual for more information.

Blackmagic Zoom and Focus Demands

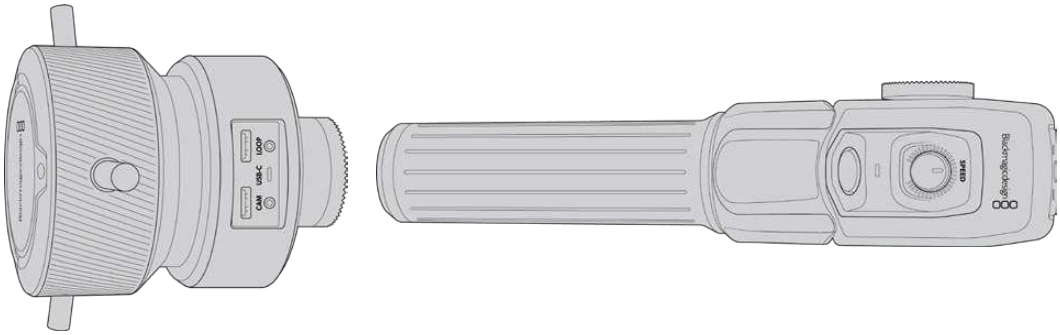

Blackmagic Zoom Demand and Blackmagic Focus Demand are optional accessories for controlling focus and zoom when using compatible servo driven B4, EF and PL lenses.

Each unit attaches to a tripod handle on your tripod or camera pedestal. This lets you control focus and zoom while simultaneously panning and tilting the camera using both hands. Additional buttons and controls let you refine the speed and sensitivity of the zoom control, engage talkback, monitor program return and more.

Connecting and Attaching to your Camera

Attaching to Tripod Handles

Each unit attaches to a tripod handle via their mounting brackets. Attach each unit to the brackets via their rosette mounts:

To attach the demand units to their brackets, simply connect them together via their rosette mounts and secure them by tightening the fastening knob.

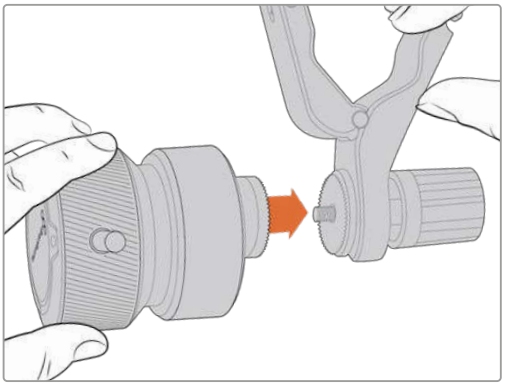

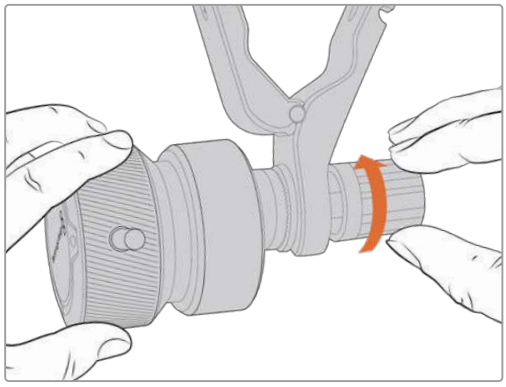

1 Place the zoom demand or focus demand against their bracket's rosette mount.

2 Tighten their fastening knob so the demand units are firmly attached to their brackets.

Now that the units are attached to the brackets, you can attach the brackets to the tripod arms. One end of each bracket contains a ‘T’ shaped latch that hinges into a slot and is then tightened.

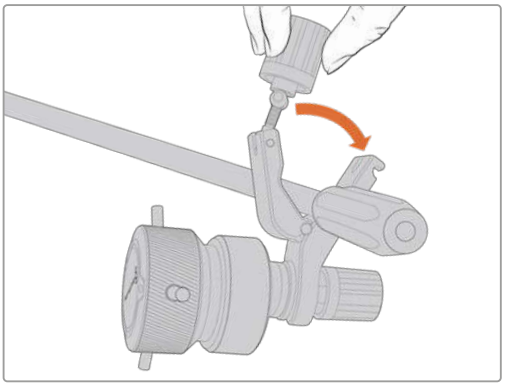

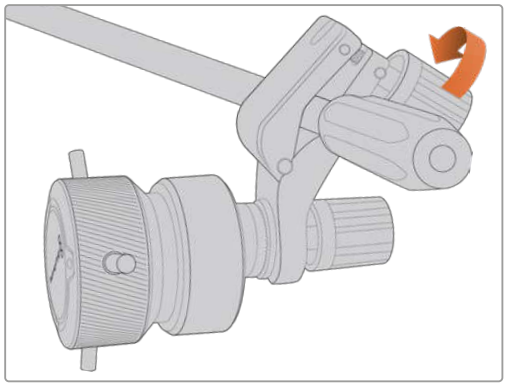

1 Loosen the latch by unscrewing the latch knob in a counterclockwise motion. This will release the ’T’ shaped latch.

2 With the latch open, place the bracket onto the tripod arm and clamp the bracket shut by closing the latch into its fastening slot. Rotate the bracket to your preferred position on the tripod arm.

3 Tighten the latch knob to secure the bracket to the tripod arm.

Connecting to Your Camera

Blackmagic Focus and Zoom Demands have two USB-C ports. This lets you use one unit individually, or both units together.

Each unit is supplied with a 1 meter long USB-C cable which is connected directly from your URSA Broadcast G2’s rear USB-C port to the demand unit’s ‘cam’ port.

If you are using both demand units, daisy chain them together by connecting the first unit to the second unit via USB-C.

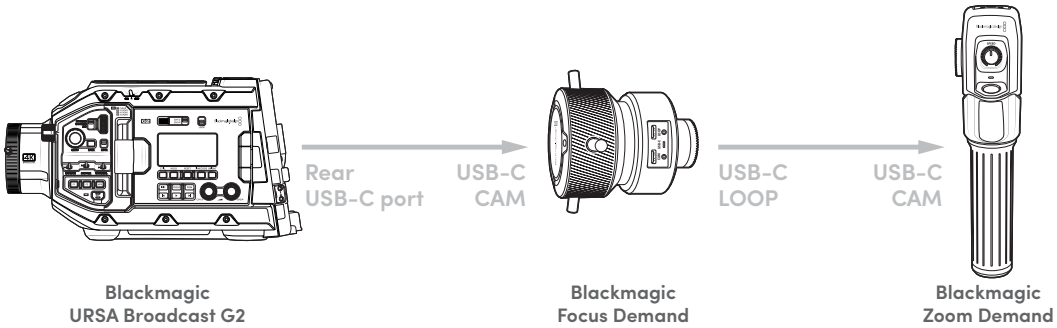

Daisy chaining allows for both units to be controlled using the rear USB-C port on your URSA Broadcast G2. For example, connect a USB-C cable into your camera’s rear USB-C port and connect the other end of the cable into the focus demand’s ‘cam’ port. With a second cable, plug the focus demand’s ‘loop’ port into the zoom demand’s ‘cam’ port.

The USB-C cable has locking screws on each end to secure the connectors to each unit, preventing accidental disconnection. You don't have to use the locking screws, but they are helpful for studio setups where the units are always connected to your URSA Broadcast G2.

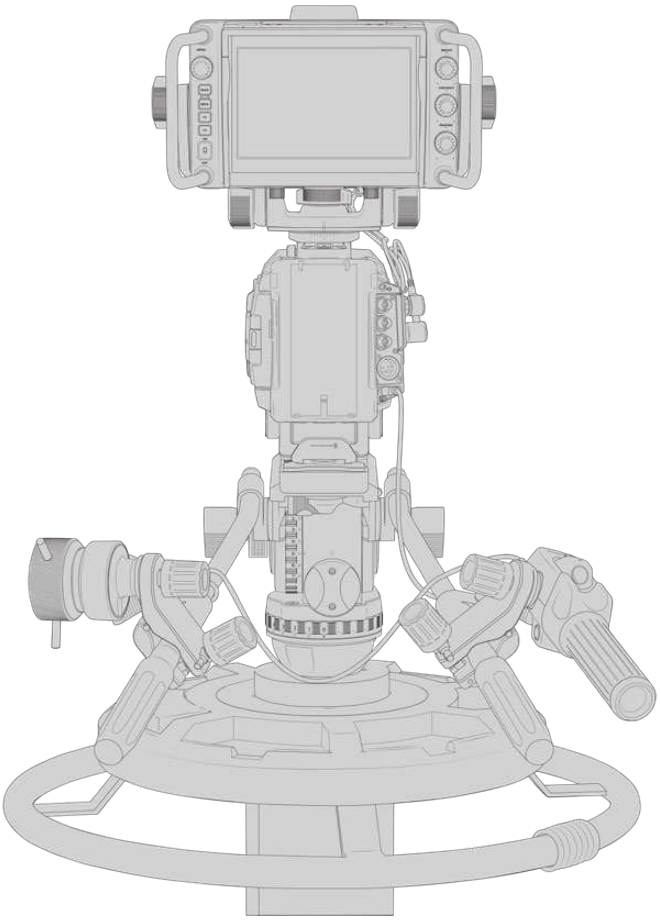

The Blackmagic Focus and Zoom Demands let you control focus and zoom without moving your hands away from the handles

Using Blackmagic Focus Demand

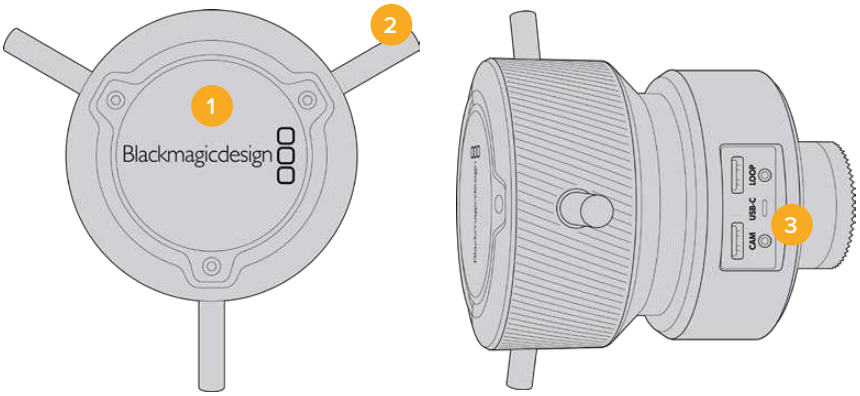

1 **Control Knob**

Rotate the focus wheel clockwise to focus on subjects closer to the lens, or counterclockwise to focus on subjects further away. You can change the focus direction in the menu by setting it to either 'normal' or 'reverse'.

TIP If you are also using a Blackmagic Zoom Demand, press the quick zoom button to magnify the image as you focus using the focus demand.

2 **Control Prongs**

These three prongs expand the diameter of the control surface to let you make finer focus adjustments with the tip of a finger.

3 **USB ports**

Allows for connecting the focus demand to the camera and daisy chaining to the zoom demand. The 'cam' port is also used for updating the internal software via the Blackmagic Camera Setup utility.

Using Blackmagic Zoom Demand

The controls on the Zoom Demand are mappable through the Camera settings. To change the button functions, refer to the 'setup settings' chapter in the 'settings' section.

The following commands are set as default:

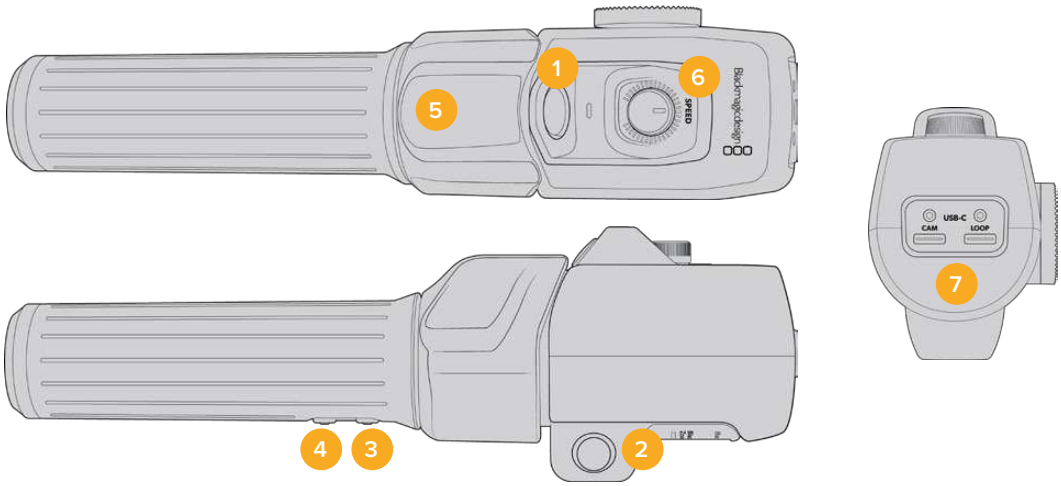

1 **Zoom F1**

This is the zoom function button 1. By default, it is mapped as a 'record' button.

2 **Zoom F2**

This is the zoom function button 2. On the other side of the controller is an identical button that performs the same function, allowing for left and right handed control. By default, it is set as a quick zoom function which instantaneously punches into the live image.

NOTE The quick zoom feature is only visible on the Blackmagic URSA Broadcast G2's LCD and will not be visible on the output video connected to a switcher or recorder.

3 **Zoom F3**

This is the zoom function button 3. The default action for this button is set to program return. This would normally be a switcher's program return feed, but can be any SDI signal connected to your camera's SDI input.

4 **Zoom F4**

This is the zoom function button 4. The default action for this button is set to push to talk. When connected to an ATEM switcher via SDI, press and hold the button to communicate with the switcher operator.

5 **Thumb Rocker**

The zoom demand handle provides a thumb rocker control. Push the thumb rocker left to zoom out, and right to zoom in. The direction of the zoom can be reversed using the camera's menu settings.

6 **Speed Dial**

Finely adjust the speed of the zoom by adjusting the speed dial at the top of the unit. You can map this dial to also control the headphone level, iris adjustment and even focus adjustment!

7 **USB-C Ports**

Allows for connecting the zoom demand to the camera and daisy chaining to the focus demand. The 'cam' port is also used for updating the internal software via the Blackmagic Camera Setup utility.

Mounting Batteries

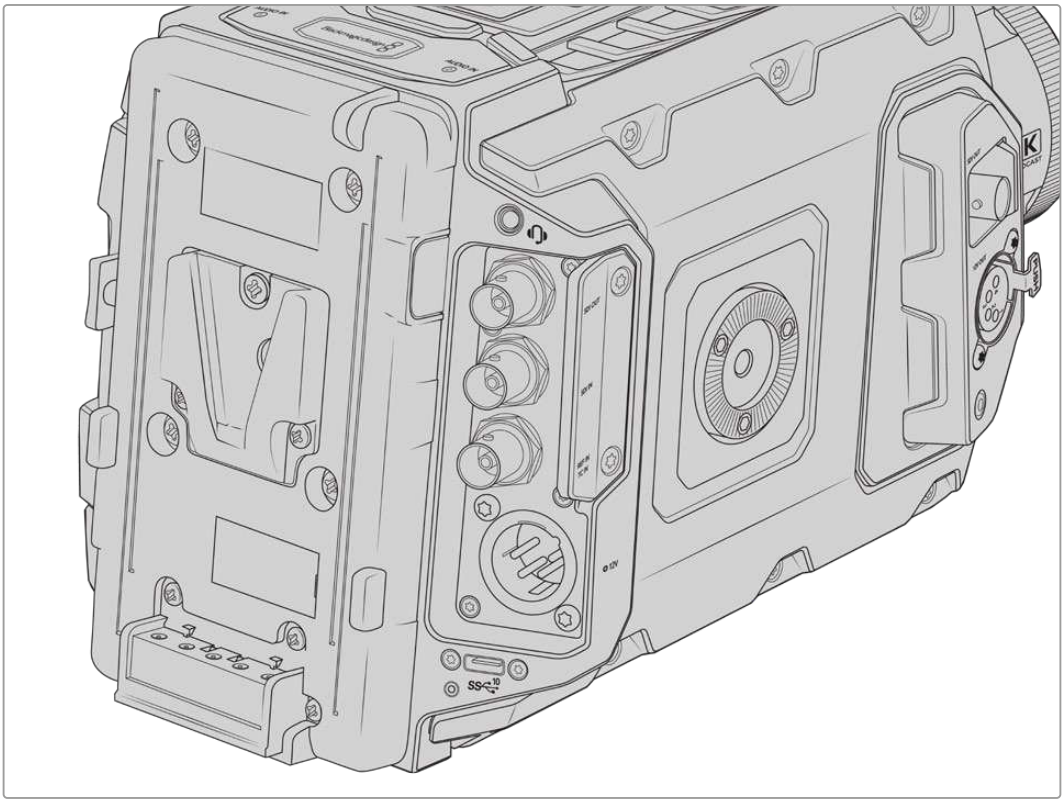

Mounting V-mount or Gold Mount Batteries

Your Blackmagic URSA Broadcast G2 comes fitted with a URSA VLock Battery Plate for attaching industry standard VLock batteries to your camera.

Other battery types can also be mounted by attaching an optional Blackmagic URSA Gold Battery Plate, or a third party battery plate.

TIP Blackmagic URSA VLock Battery Plate and URSA Gold Battery Plate support displaying percentage information with compatible batteries. Blackmagic battery plates have a '+12V out' connector referred to as a 'D-tap' or 'P-tap' to power accessories such as an external monitor. It is worth noting that because this output is regulated from the camera, it will power down safely when the camera switches off. This regulated output supplies 12 Volts at up to 1.5 Amps. Some third party URSA battery plates, and even some batteries, offer an unregulated D-tap output. These supply continuous power when the camera is rebooting or power cycled, but the voltage varies depending on the charge level of the battery and accessories plugged in will drain the battery continuously.

You can purchase Blackmagic URSA VLock Battery Plates and URSA Gold Battery Plates from Blackmagic Design resellers, or third party battery plates from suppliers of professional digital cinema and video equipment. If you want to modify your own battery plate to use with your Blackmagic URSA Broadcast G2, then you can use the supplied adapter cable and connector. Refer to the 'using your own battery plate' section for information about how any battery plate can be modified to use with URSA Broadcast G2.

To replace the battery plate on your Blackmagic URSA Broadcast G2:

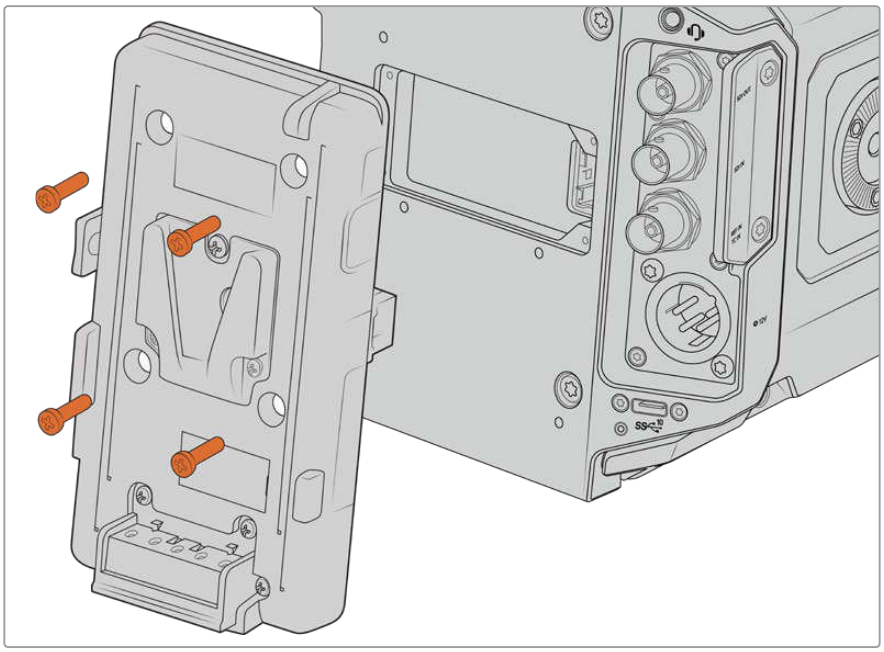

1. Unscrew the 4 x M3 screws from each corner of the URSA VLock Battery Plate.
2. Disconnect the battery plate's molex connector from your camera's molex power connector.
3. Connect the new battery plate's molex connector to your camera's molex power connector.
4. Screw the battery plate onto your Blackmagic URSA Broadcast G2's plate mounting points using 4 x M3 screws. Make sure the connector cable is tucked safely into the cable slot and not crushed between the plates when tightening.
5. With the new battery plate connected to your camera, you can now mount a battery and power up your camera.

Using your own Battery Plate

Adapter Cable and Connector

If you want to modify a third party battery plate for use with your URSA Broadcast G2, you can use the supplied adapter cable and connector, which is also available at your local Blackmagic Design support office.

To wire the adapter cable and connector to your battery plate:

1. Strip approximately half an inch of insulation from the end of each red and black wire.
2. Solder all 4 x red 'Batt' wires to the corresponding 'positive' wire from your battery plate.
3. Solder all 4 x black 'GND' wires to the corresponding 'negative' wire from your battery plate.

Ensure the joins are well insulated.

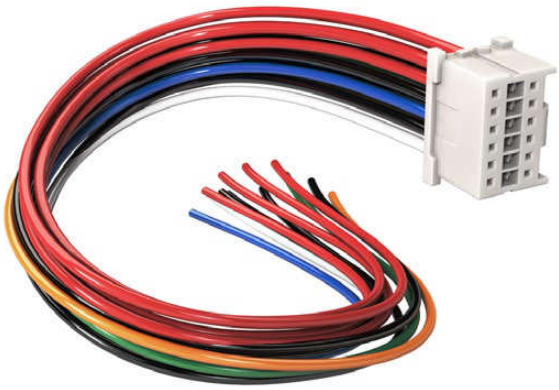

If you need to modify any battery plate to plug into URSA Broadcast G2, use the supplied adapter cable and connector, which is also available from your local Blackmagic Design support office

This enables battery power to your camera. You can also connect additional wires for features such as 12 V output and battery status. Refer to your battery plate information, plus the diagram and tables on this page for help connecting the wires. If you require further assistance visit the Blackmagic Design support center at www.blackmagicdesign.com/support.

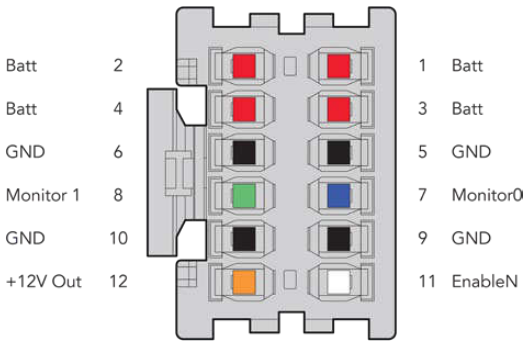

The rear view of the adapter's connector housing. Refer to the wire configuration table for a description of each pin

Wire Configuration Table

Pins	Signal	Color	Direction	Description
1, 2, 3, 4	Batt	Red	To URSA	12 V to 20 V
5, 6, 9, 10	GND	Black	–	–
7	Monitor0	Blue	To URSA	Analog battery level or open drain data line (20 V max)
8	Monitor1	Green	To URSA	Open drain clock line (3.4 V max)
12	+12 V out	Orange	From URSA	12 V regulated output 1.5 A max (18 W)
11	EnableN	White	To URSA	Connect to GND to enable +12 V out. Leave floating if +12 V out is not required.

Each Batt and GND pin supports 3 amps. Make sure all Batt and GND pins are connected. To monitor the battery status using Anton Bauer, IDX, or Blueshape plates, follow the connection table below:

Anton Bauer	Connect the blue/white striped wire to the housing blue wire at pin 7.
IDX	Connect the green wire to the housing green wire at pin 8, and the gray wire to the housing blue wire at pin 7.
Blueshape	Connect the blue wire labelled “SMBC” to the housing green wire at pin 8. Connect the brown wire labelled “SMBD” to the housing blue wire at pin 7.

Secure any unused wires by cutting them as close as possible to the rear of the adapter connector.

URSA Broadcast ENG Kit

Product Assembly

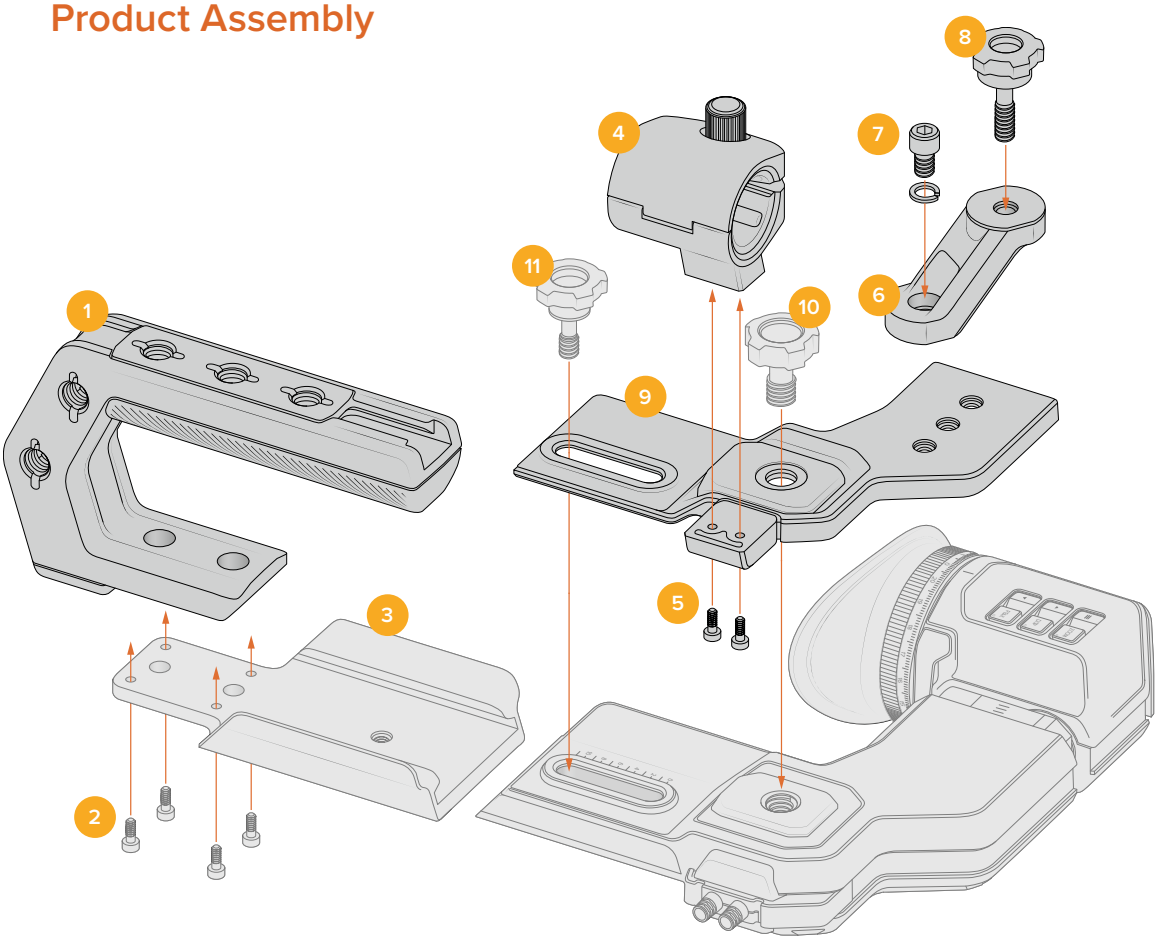

1 ENG Top Handle

2 T10 x 8.5mm[1]

3 URSA EVF Mounting Plate[1]

4 Microphone Mount

5 M3 x 8mm

6 Rotating Light Mount

7 1/4” x 10mm with spring washer

8 1/4” x 17.5mm thumb screw

9 Central Top Mount Plate

10 3/8” x 18.5mm thumb screw[2]

11 1/4” x 22.5mm thumb screw[1]

1 From URSA Broadcast G2, URSA Mini Shoulder Kit or can be purchased as spare parts including the URSA EVF mounting plate and URSA EVF 1/4” thumbscrew.

2 The URSA EVF 3/8” thumbscrew is included in the URSA Viewfinder accessory or can be purchased as a spare part.

Accessories Attachment

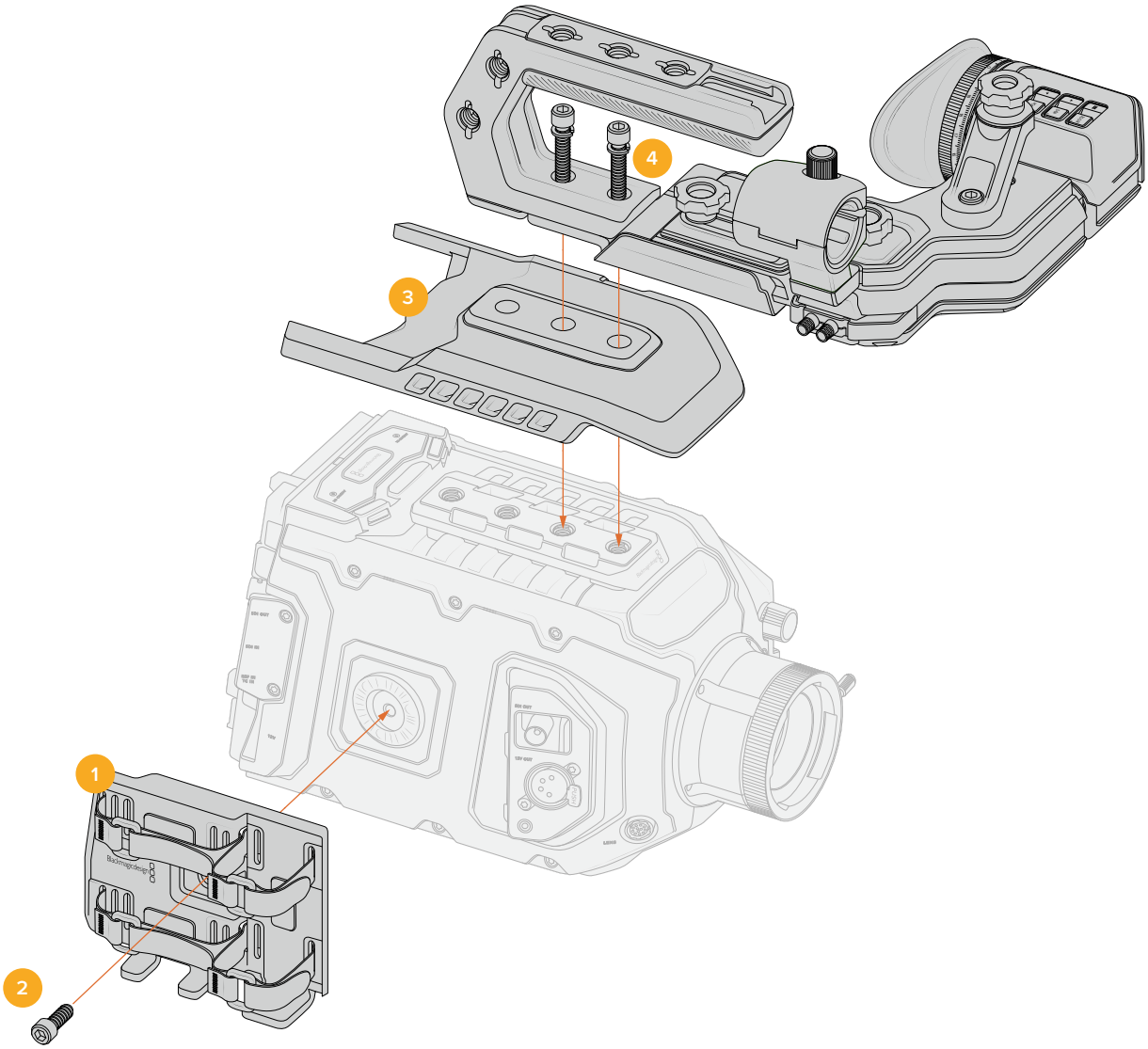

1 **Side Panel Cradle**

2 M6 x 9mm, 3/16”, hex driver

3 **Breathable Body Armor Top Plate**

4 1/4” x 30mm with spring washers

Blackmagic Fiber Converters

Blackmagic Camera Fiber Converter and Blackmagic Studio Fiber Converter are optional accessories that provide a SMPTE fiber connection between your URSA Broadcast G2 or URSA Mini camera and an ATEM switcher.

SMPTE fiber lets you connect all video, power, talkback, tally and camera control signals between an ATEM switcher and your camera using one single industry standard SMPTE hybrid fiber optic cable. Using a SMPTE fiber connection greatly reduces the amount of cables required, which helps makes the production setup more efficient and simpler to run. The standard connectors on Blackmagic Studio Fiber Converter allow you to easily add the fiber converters into an existing broadcast truck infrastructure.

Blackmagic Camera Fiber Converter

Mounts to the back of your URSA Mini or URSA Broadcast G2 and connects to the Blackmagic Studio Fiber Converter via a standard SMPTE hybrid 304 connector.

Blackmagic Studio Fiber Converter

This converter converts the optical fiber SDI signal from the camera unit to SDI via BNC, which is then connected to an ATEM switcher. The converter also takes all return feed sources, including program return from the ATEM switcher, and sends them back to the camera unit.

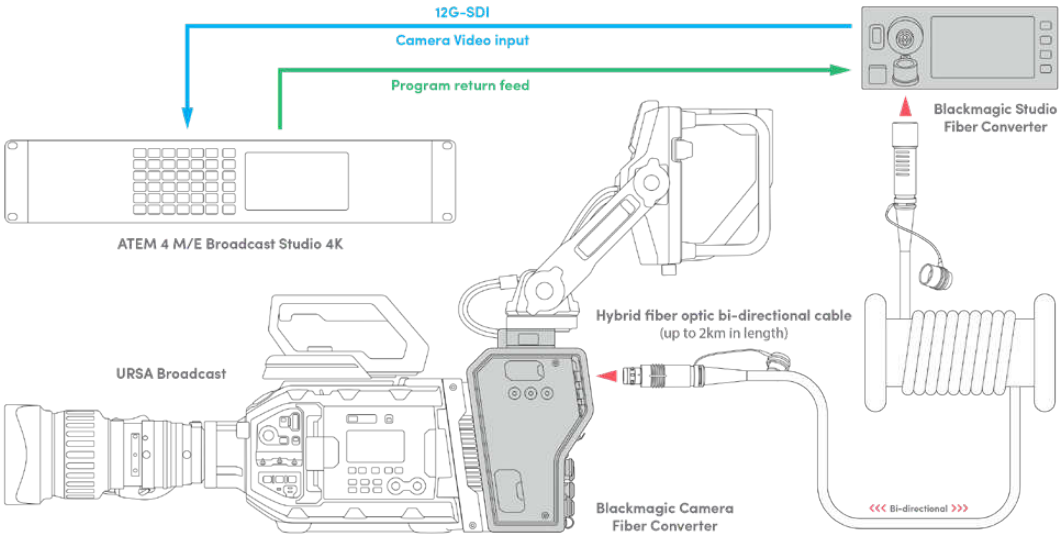

The Blackmagic camera and studio fiber converters connect via optical fiber to provide efficient SDI video, power, talkback, tally and control signals via a single SMPTE fiber optic cable.

Getting Started with Blackmagic Fiber Converters

Getting started is fast and efficient. It won't take long before you are producing video content and enjoying the benefits of SMPTE fiber.

About SMPTE Fiber

SMPTE fiber cables provide you with a simplified way to carry multiple signals as well as power, over long distances. This is useful in broadcast scenarios, as you don't need to connect several cables for each camera that is connected to your switcher.

With a SMPTE 311 hybrid fiber optic cable, you can use one single industry standard optical fiber cable to connect each camera to your ATEM switcher, and provide all video, power, talkback, tally and control signals along one cable. With optical fiber you can also carry these signals and power over longer distances up to 2 kilometers.

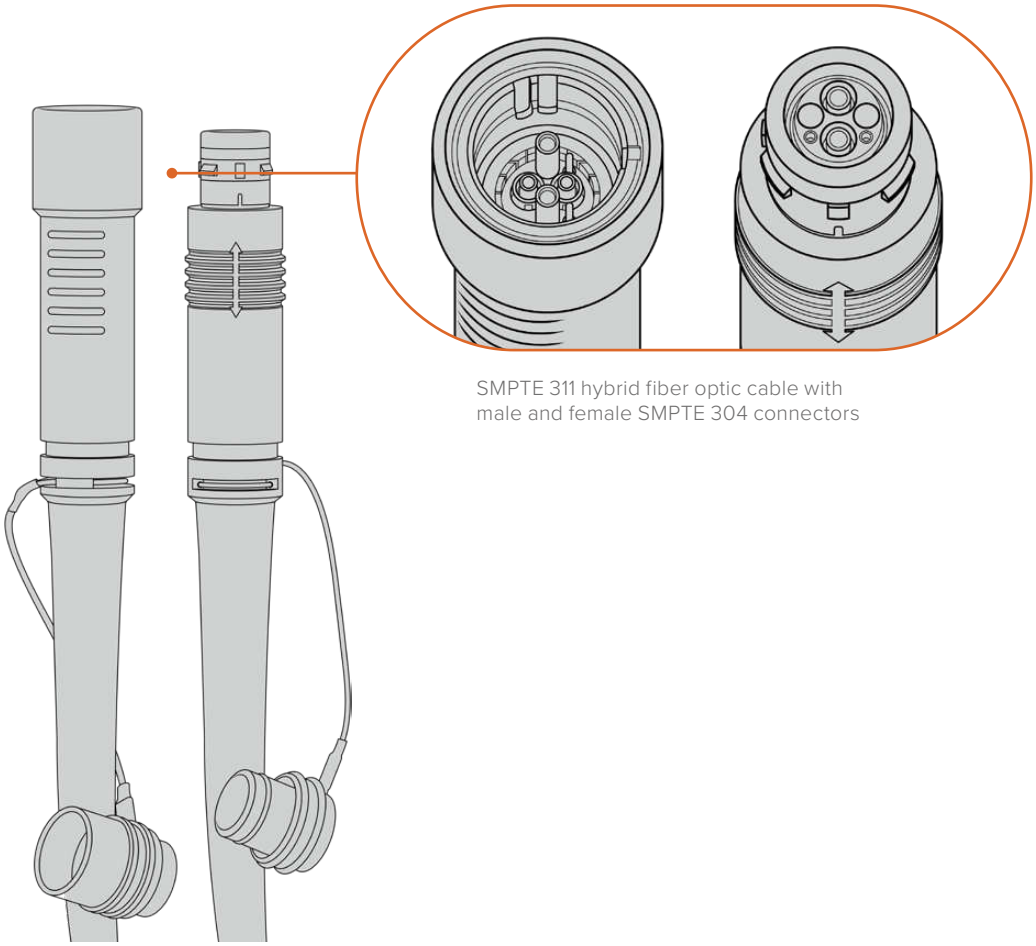

SMPTE 311 hybrid fiber optic cable with male and female SMPTE 304 connectors

NOTE The male and female ends of a SMPTE 311 hybrid fiber optic cable can be identified by looking for the male and female pins inside the tip of the SMPTE 304 connector. The gender of the connectors is not determined by their outward appearance.

TIP Connect the rubber cap from each end of the SMPTE fiber cable into the rubber cap on each converter to prevent any dust or debris from entering the caps.

One of the main benefits of using a SMPTE fiber connection is to connect to the control room or broadcast truck in a traditional live broadcast environment. Most modern sporting stadiums already have optic fiber cables installed between camera positions and the control room or broadcast truck, so this means you can plug directly into these systems.

The optic fiber cable used to connect to an existing fiber system, or to connect the two Blackmagic fiber converters together, is a SMPTE 311 hybrid fiber optic cable with SMPTE 304 connectors.

Protecting SMPTE Connectors

It is very important that the SMPTE fiber cable's connectors are always protected by their rubber caps. This is because minute dust particles can collect very quickly on the polished ends of the glass fiber tubes which can interrupt signal flow. The best practice is to immediately replace the rubber cap as soon as a connector is exposed. For example, immediately prior to connection, and immediately after disconnection.

It's also a good idea to connect the rubber cap from each end of the SMPTE fiber cable into the rubber cap on the converters whilst in use, to prevent any dust or debris from entering the caps.

Plugging in Power

Power from the studio unit is sent through the fiber cable to the camera unit, therefore the first step to connecting power is to power the studio unit.

Powering the Studio Fiber Converter

Plug a standard IEC power cable into the power connector on the studio unit's rear panel.

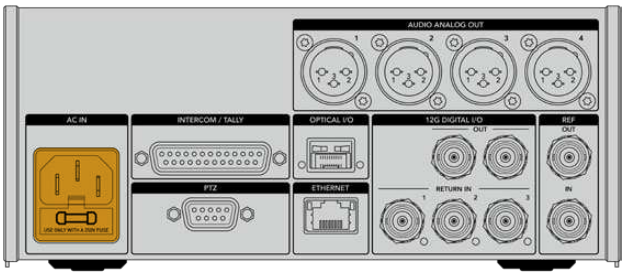

Connect power to your studio fiber converter via a standard IEC power cable

To turn the unit on, set the power switch on the front control panel to the 'on' position.

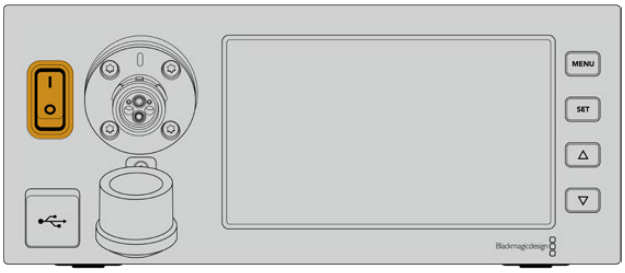

Connecting SMPTE Fiber

The next step in getting started is to connect the SMPTE fiber cable between the studio fiber unit and the camera unit. This provides power from the studio unit to the camera unit, and fiber for all video feeds.

NOTE Extensive safety checks are initiated whenever a powered hybrid fiber optic cable is plugged into the converter and the power safety of the unit is continually monitored during use.

Connecting the Fiber Cable to the Studio Unit

The male end of the SMPTE fiber cable's locks securely onto the female fiber connector on the front panel of the Blackmagic Studio Fiber Converter. This is a secure lock ensuring that the cable is not accidentally disconnected during broadcast.

To connect the cable:

Align the red indicator on the cable connector with the red dot on the unit's fiber connector, and plug the connector in until it securely clicks into place.

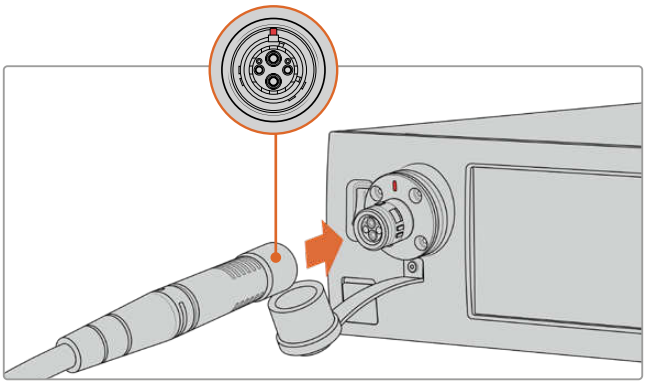

Plug the male end of the SMPTE fiber cable into the female connector on the front of Blackmagic Studio Fiber Converter

To disconnect the cable:

Push the metal base of the studio unit's fiber connector towards the front panel and remove the cable connector.

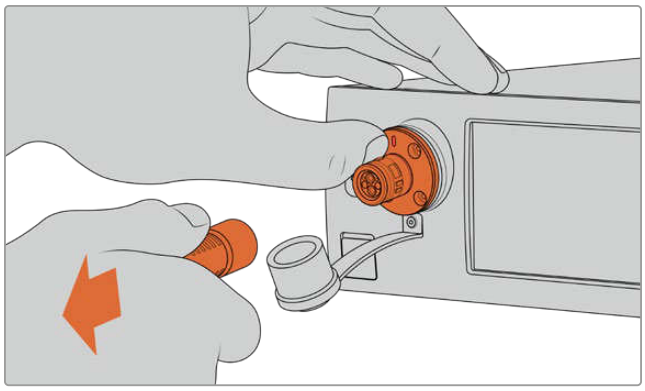

Push the metal base of the studio unit's fiber connector towards the front panel to disengage the cable connector allowing you to pull the cable away from the unit.

Once plugged in, it is a good idea to connect the rubber cap from the end of the SMPTE fiber cable into the rubber cap from the Blackmagic Studio Fiber Converter. This will prevent any dust or debris from entering the caps, and ensure that the caps remain clean.

Connecting the Fiber Cable to the Camera Unit

The female end of the SMPTE fiber cable locks into the male connector on the side of Blackmagic Camera Fiber Converter, ensuring that the cable is not accidentally disconnected during broadcast.

To connect the cable:

1. Align the red indicators on each connector, and plug the cable connector into the camera unit's connector until it securely clicks into place.
2. Once plugged in, it is a good idea to connect the rubber cap from the end of the SMPTE fiber cable into the rubber cap from the Blackmagic Camera Fiber Converter. This will prevent any dust or debris from entering the caps, and ensure that the caps remain clean.

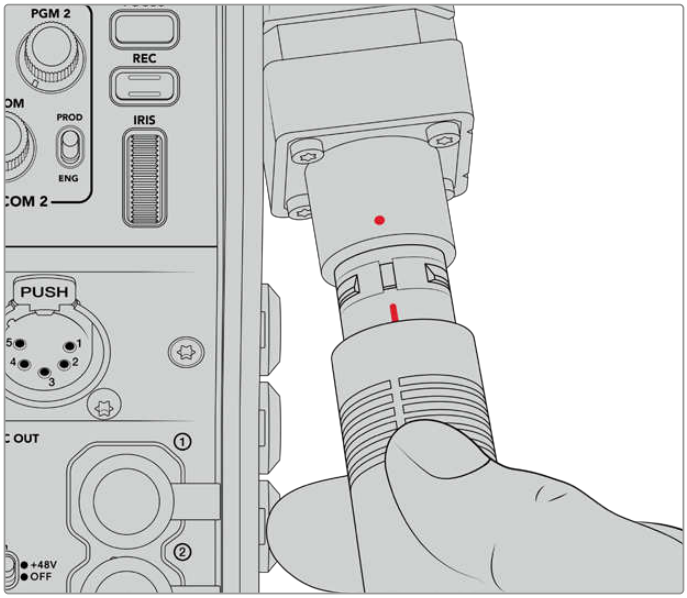

Align the red indicators to connect the SMPTE Hybrid Fiber Optic cable to the large connector on the Blackmagic Camera Fiber Converter

NOTE The SMPTE 304 connectors on the SMPTE 311 cable are very durable and lock firmly to the camera. If you need to disconnect the cable, please ensure that you have the camera firmly attached to a tripod head or are bracing the camera with your spare hand while trying to disconnect the cable.

To disconnect the cable:

1. Pinch the top section of the female end of the cable, and compress the rubber sheath around the cable, pulling it gently away from the tip of the cable until you can see the red ring under the sheath. This will detach the teeth from the locking mechanism.
2. Put one hand on the camera to brace it gently, and pull the cable away from the connector on the Blackmagic Camera Fiber Converter. The cable should disconnect easily without the need for excessive force.

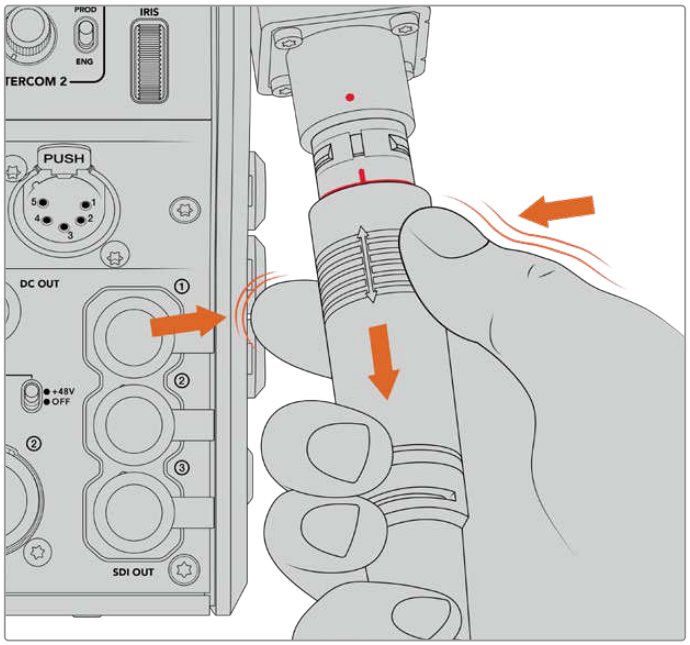

Pinch the rubber around the tip of the cable to reveal the red ring below, then pull the cable to disconnect

NOTE The SMPTE hybrid fiber cable is the heart of the broadcast ecosystem, so it is crucial that great care is taken. For example, avoid kinks in the cable, always prevent the cable from being pressed under heavy items, and avoid bending at 90 degree angles. Avoid dropping the connectors and take care when connecting and disconnecting. Always cap the connectors as soon as they are exposed.

Confirming Power and Fiber

The two units will now establish a handshake process to determine that power is being supplied safely and fiber is securely connected.

This process involves the following:

1. The studio unit establishes a low power state with the camera unit. This is shown by the camera unit's red power status indicator.
2. Once power is determined as safely connected, a high power state is established and the camera unit's power indicator will illuminate green.
3. The fiber connection is confirmed and the fiber status indicator will illuminate green.

This is usually very fast and the indicators can turn green almost immediately. If you are using a cable over greater distances, the handshake process can take a moment longer before indicators illuminate green.

If the power light remains red for an extended period of time and does not turn green, or flickers between red and green, check that both ends of the fiber cable are securely connected. If the interruption persists, check the condition of your fiber cable.

Power Safety Considerations

The SMPTE hybrid fiber optic cable is capable of carrying high voltage over long distances so that you can power a camera and accessories that are located up to 2km away.

To ensure safe operation, your Blackmagic Studio Fiber Converter has safety mechanisms built in to ensure accurate monitoring and automatic management of the voltage being carried.

A dedicated micro controller along with internal handshaking and communication between the Blackmagic fiber converters ensure that a hybrid fiber optic cable remains off until it is plugged into the Camera Fiber Converter. It then goes into a low power state and completes safety checks before going into high power mode. High voltages are not enabled until the converters ensure that an optical signal is present, there is a 5mA signal core current loop, and there is less than 30mA of imbalance between the power cores.

Connecting to an ATEM Switcher

How to connect Blackmagic Studio Fiber Converter to your switcher:

1. Connect a BNC cable from Blackmagic Studio Fiber Converter's rear 12G-SDI output to one of the SDI inputs on your switcher. Ensure your camera is set to use the same format and frame rate as your switcher.
2. Connect a BNC cable from your program return feed output on your switcher to the 'return in' 1 input on the studio unit's rear panel.

TIP When using multiple cameras in a live production, you may need to run the program return feed from the switcher through a Teranex Mini SDI Distribution 12G or a Smart Videohub. That is because there are a set number of program outputs on the switcher and you will likely need access to more.

3. If you require any other return feeds to be sent to your camera such as a clean program return feed, a teleprompter feed, an ISO feed from another camera, graphics or any other signal then plug these into 'return in' 2 or 3.

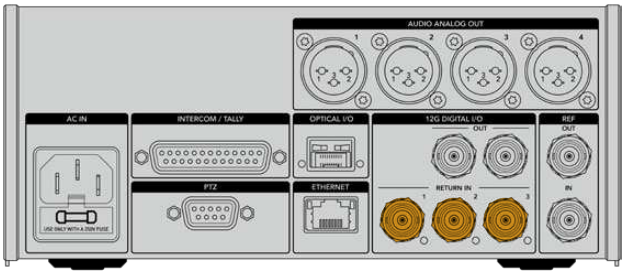

Plug the program return feed from the switcher and other return sources into the 'return' inputs on the studio unit's rear panel

Confirming Video

You can now check that video is working and all return feeds are present.

1. Ensure the ATEM switcher's program output is connected to the studio unit's SDI return input 1.
2. If you want to check all return feeds, plug video sources into SDI return inputs 2 and 3.
3. Now plug an SDI monitor, such as a Blackmagic SmartView 4K, into the 'SDI out' on the side panel of the camera unit.

With a monitor connected to the SDI output, rotate the corresponding selection knob next to the return button to switch between all three return feeds. You can set the two return buttons to monitor two different return feeds if you want to.

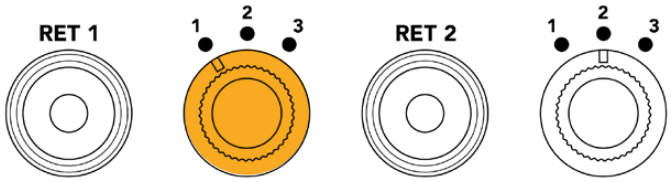

Switch between the return feeds on the camera unit and press the corresponding return button to view the selected feed on a monitor

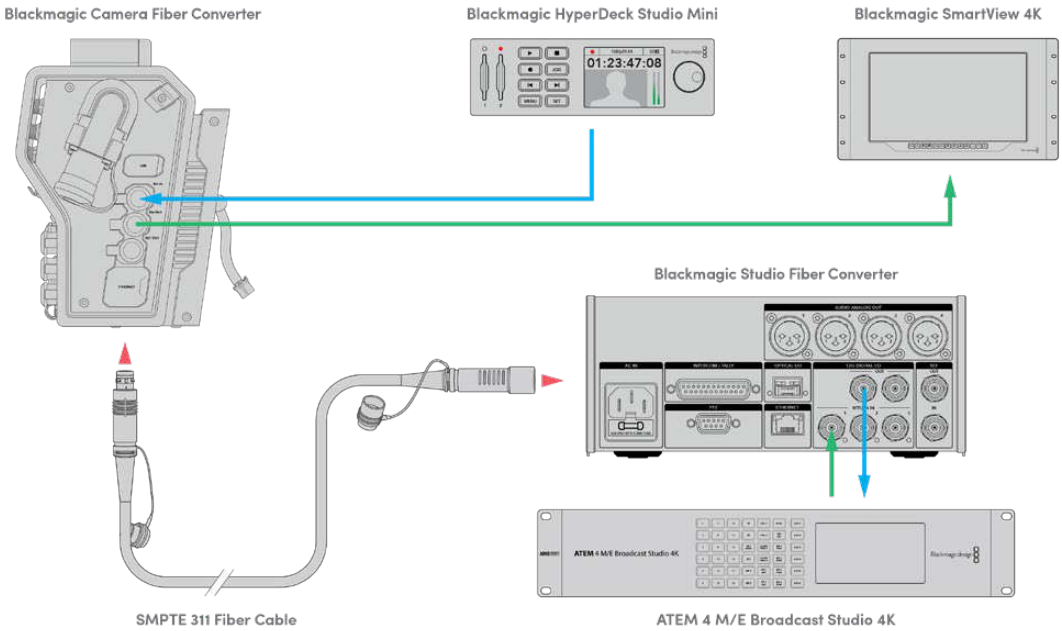

To confirm video, plug video sources into the return feed inputs on the studio unit, then view them on a monitor connected to the camera unit

Why Connections on the Front?

The fiber connection is located on the front of the studio unit so it can become the optical patch connection in the rear of a rack. Typically, the studio converter will be installed facing the rear of a rack so the SMPTE cables can be plugged direct into the unit. This means there is no need for extra rack patch panels and the cost of an extra short cable to the fiber unit. The large LCD next to the SMPTE fiber connector lets you quickly verify a good connection to the camera.

Plugging in Camera SDI

Connecting video signals between your Blackmagic Camera Fiber Converter and URSA Broadcast G2 or URSA Mini, is as simple as connecting two of the three included SDI cables from the side of your converter to the rear of your camera.

How to connect your Camera Fiber Converter to your camera

1. Connect one of the included BNC cables from Blackmagic URSA Broadcast G2 or URSA Mini's rear 12G-SDI output to the SDI input on Blackmagic Camera Fiber Converter.
2. Connect one of the included BNC cables from the SDI output on Blackmagic Camera Fiber Converter to the 12G-SDI input on Blackmagic URSA Broadcast G2 or URSA Mini's rear panel.

Plugging in Return SDI Outputs

The three SDI outputs marked 'SDI Out' on the front of the camera unit are loop outputs of the return feeds coming from the switcher. These let you connect the return feeds to other SDI equipment near the camera, for example a teleprompter or talent monitor.

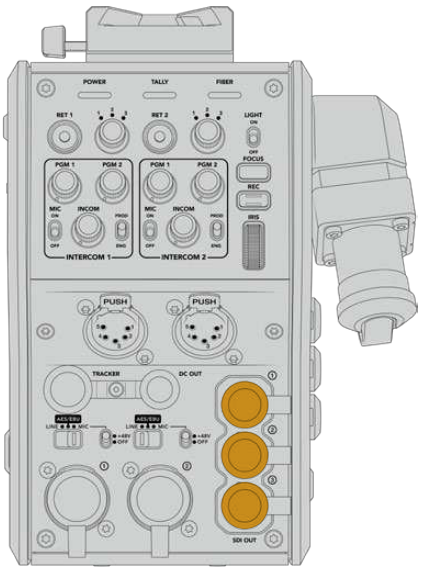

The three return feed loop outputs can be connected to SDI equipment near the camera, for example a teleprompter or monitor

NOTE The return feed SDI loop outputs support 3G-SDI to provide enough bandwith for three separate feeds. This means Ultra HD return feeds from the switcher up to 2160p60 are down converted to 1080p at the equivalent frame rate.

Mounting Blackmagic Camera Fiber Converter

Blackmagic Camera Fiber Converter mounts to the back of URSA Broadcast G2 and URSA Mini directly behind the camera body, and connects to your camera's rear SDI in and SDI out BNC connectors. If you have installed a battery plate to the rear of your camera, you will need to remove it before connecting the Blackmagic Camera Fiber Converter.

NOTE Before installing Blackmagic Camera Fiber Converter you should check that URSA Mini's internal software is version 4.4 or above and URSA Broadcast G2 is 4.6 or above. You can check your software version on page 4 of the camera's 'setup' menu. For more information on updating your camera firmware see the section 'Blackmagic Camera Setup Utility' in this manual.

When attaching Blackmagic Camera Fiber Converter, you will need the following tools:

- 1 x phillips head screwdriver
- 1 x 2.5mm Hex driver

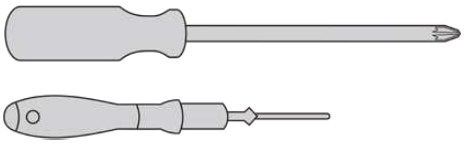

To attach the Blackmagic Camera Fiber Converter to your URSA Broadcast G2 or URSA Mini, you will need a large phillips head screwdriver and a 2.5mm Hex driver

To mount and connect Blackmagic Camera Fiber Converter:

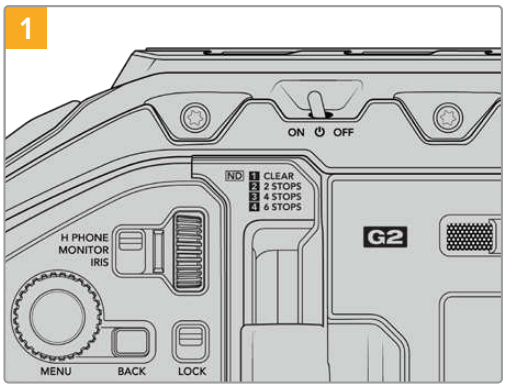

Ensure your camera is powered off. If using URSA Broadcast G2 or URSA Mini Pro, power it off by moving the power switch to 'off'.

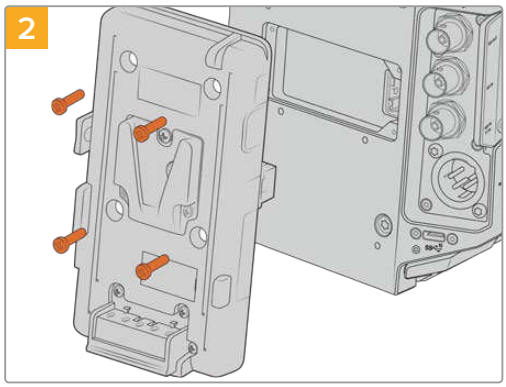

Remove the battery plate or molex power cover plate, if attached, using a phillips head screwdriver.

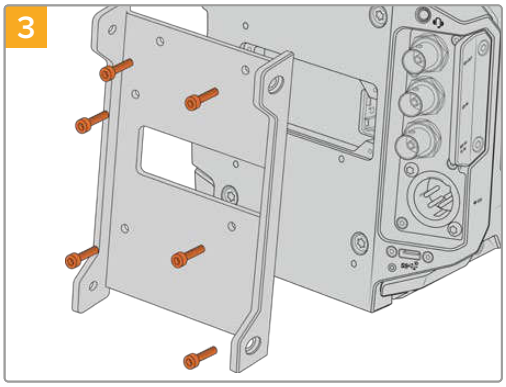

Attach Blackmagic Camera Fiber Converter's mounting bracket using 6 x 2.5mm Hex screws.

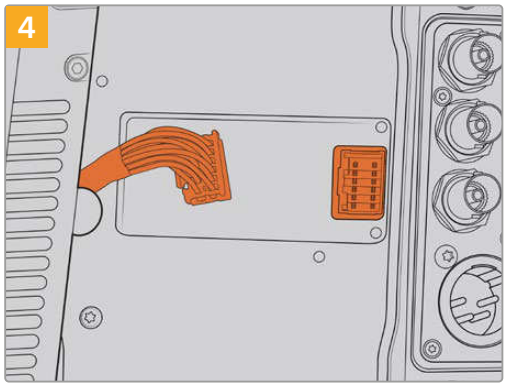

Plug the molex connector on Blackmagic Camera Fiber Converter into the molex power socket on your camera's rear panel.

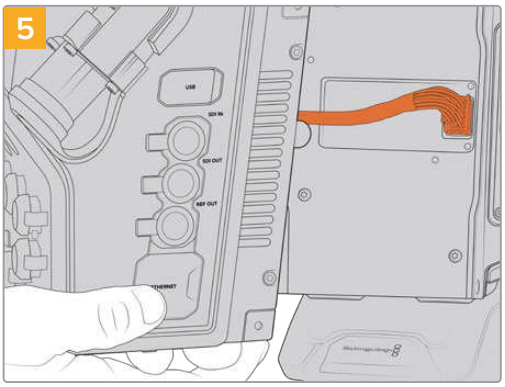

Slide the Blackmagic Camera Fiber Converter onto the mounting bracket, and attach it using 2 x 2.5mm Hex screws on each side of the bracket.

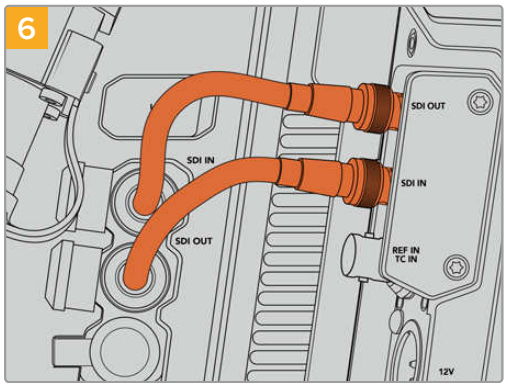

Use the included BNC cables to connect the SDI output on the back of your camera to the SDI input on Blackmagic Camera Fiber Converter, and the SDI output from the fiber converter to the SDI input on the rear of your camera.

NOTE When setting up your production and using URSA Broadcast G2 or URSA Mini with the fiber unit attached, it's important to maintain some clearance underneath the fiber unit to allow adequate ventilation.

As your camera will often be used on a tripod, or shoulder mounted, clearance will already be provided. However, if you are operating the unit sitting flat on a surface it is a good idea to attach the URSA Mini shoulder pad, or third party baseplate or bridge plate as this will maintain the cooling fan's air flow in the underside of the Fiber Converter.

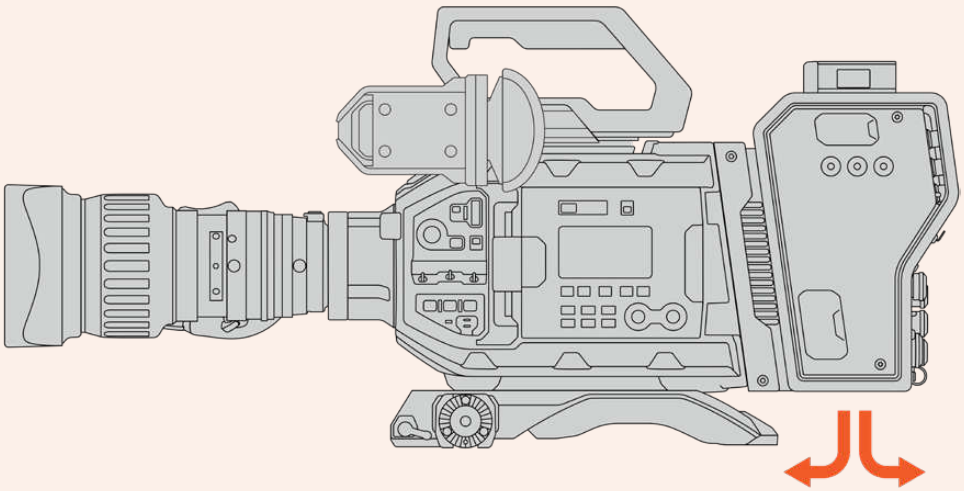

Attaching the URSA Studio Viewfinder

The attached V-lock plate on the top of the unit lets you connect a Blackmagic Studio Viewfinder. This positions the studio viewfinder directly at the eye level when the camera is mounted on a pedestal or tripod.

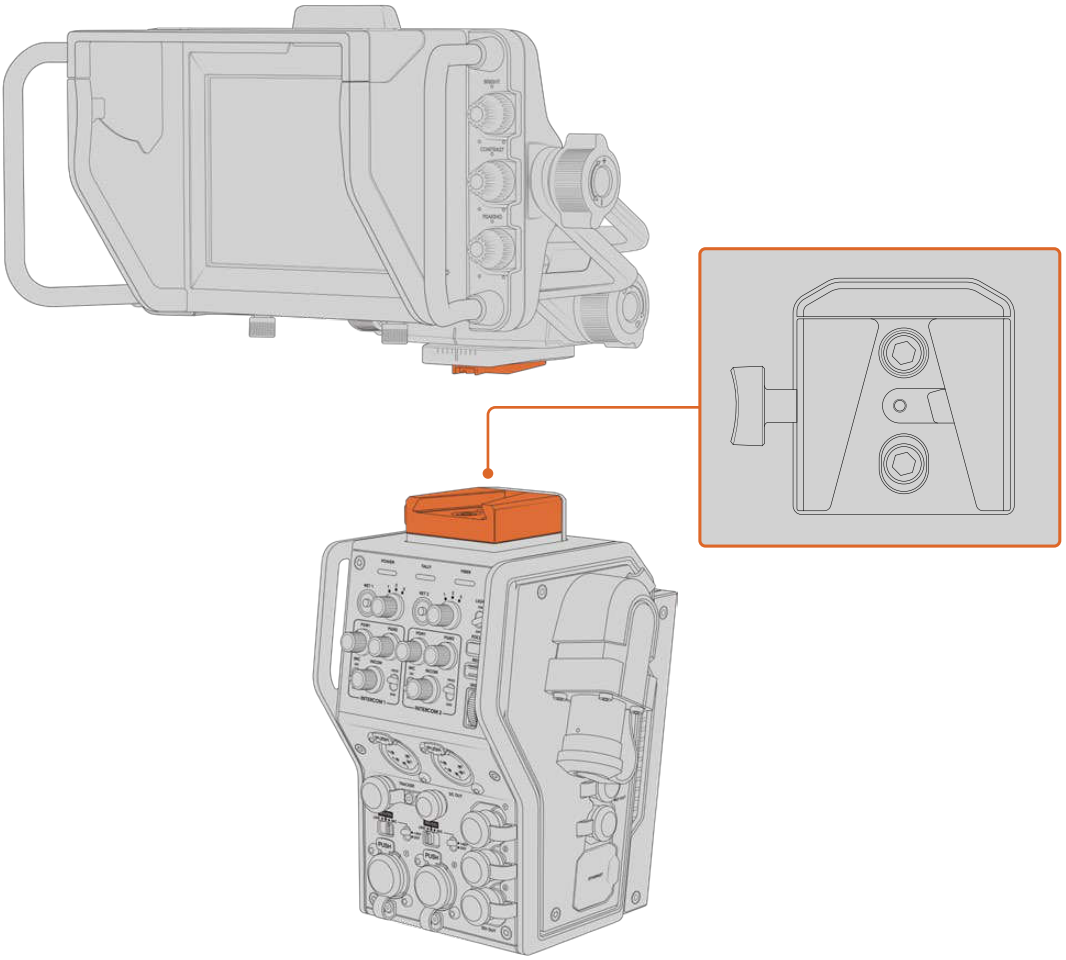

The V-Lock mount on the top of the camera unit lets you mount the Blackmagic URSA Studio Viewfinder

Plugging in a Talkback Headset

Plug a broadcast headset into one of the two 5 pin XLR connectors on the front of the camera unit. Having two headset connectors allows two people to communicate with crew simultaneously.

That's all there is to getting started! With the fiber converters powered and video connected via SMPTE fiber, you can start using the converters to create your live production with greater flexibility and efficiency. Please continue reading the manual for more information on how to use all the features on your Blackmagic fiber converters.

Operating the Camera Fiber Converter

Selecting a Return Feed

The two return buttons on the front panel can be used in the same way as the PGM button on the camera, to switch the feed on the LCD, Blackmagic URSA Studio Viewfinder and HD monitoring outputs between the camera view and program return view.

The two return buttons marked 'ret 1' and 'ret 2' switch between two chosen return feeds. The three way rotary switches next to the 'ret 1' and 'ret 2' buttons assign which return feed you would like to view when you press the corresponding button to the left of the switch. These positions on the rotary switch relate to the 'return in' 1, 2 and 3 SDI connectors that are on the back of the Studio Fiber Converter.

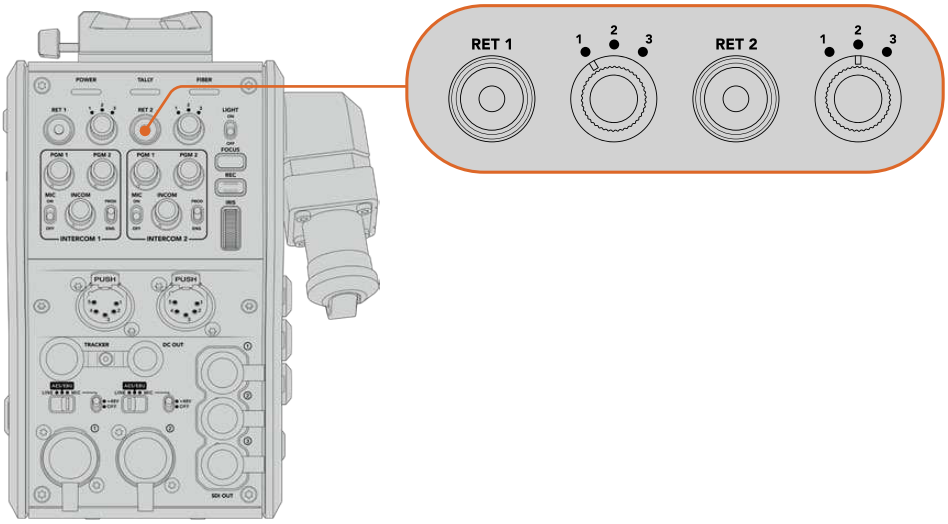

The return buttons and three way rotary switches allow you to select which return feed to view when the return buttons are pressed

Press and hold one of the return buttons to see the selected program feed. The program feed will continue to display whilst the return button is being held. Double press the return button to lock the display to the return feed. Pressing the return button again will exit the return feed and return to the camera view.

This means you can quickly and easily adjust which of the three return feeds being sent from Blackmagic Studio Fiber Converter you would like to have fast access to on the two return buttons. For example the three return feeds might be the switcher's program output feed complete with graphics, a teleprompter feed and a feed direct from another camera.

By using these switches you could assign 'ret 1' to be your program feed permanently and then use the second 'ret 2' button to check what is being sent to the teleprompter, and to occasionally switch it to check framing on another camera when you need to match its framing or angle.

There are also return buttons on the left side of the unit, marked 'ret 1' and 'ret 2' that provide additional access to view the return feeds when operating your camera from the side. They perform the same function as the return buttons on the front of the unit.

Using the Call Button

Next to the return buttons is a ‘call’ button, that when pressed, flashes the red tally indicator on your Blackmagic Studio Fiber Converter’s LCD screen. The ‘call’ button also makes a numbered ‘press to talk’ button on the panel of ATEM Talkback Converter 4K flash red. These visual indicators are to alert people in the control room that you need assistance.

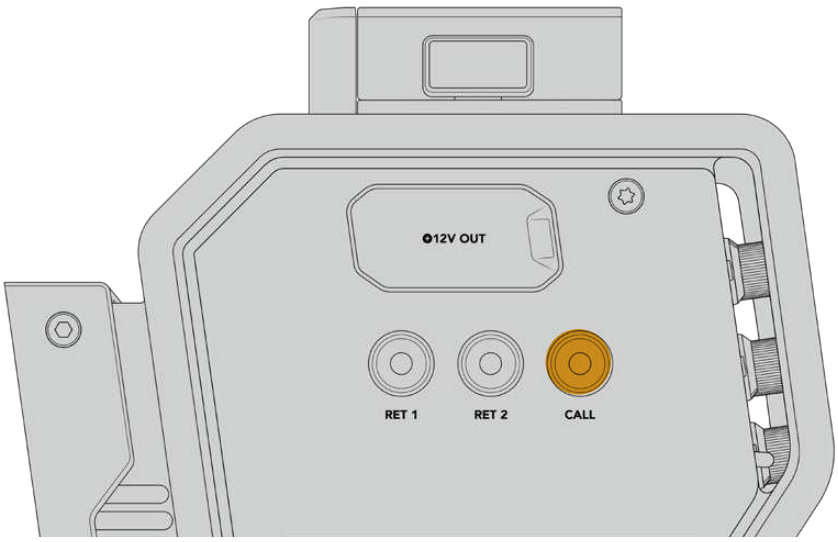

Using Talkback

The two female 5 pin XLR connectors allow you to plug in two headsets, so that you and another crew member can have communication with the rest of the crew simultaneously.

The intercom controls for each headset are grouped into two sets for two independent intercoms, and are effectively three way audio mixers for each headset XLR connector that is directly below.

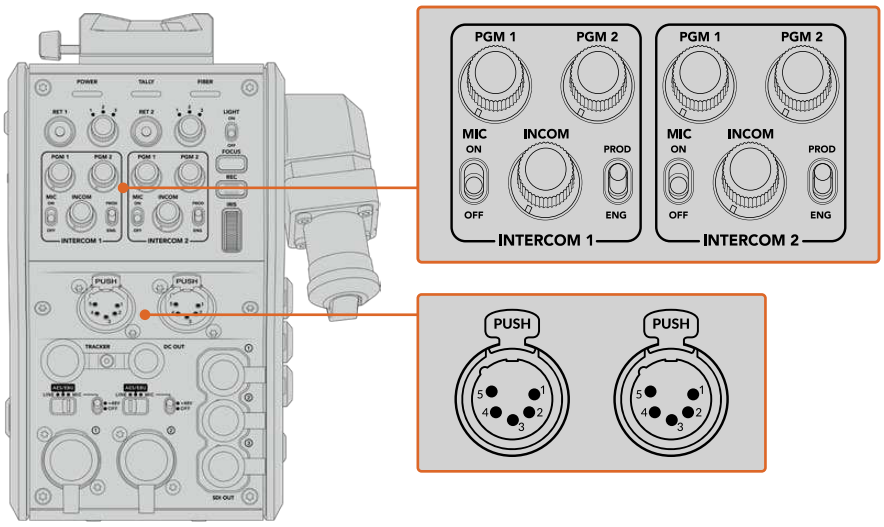

The intercom controls for each headset are located directly above each headset connection

You will hear the audio from the feeds that you have selected for ‘ret 1’ and ‘ret 2’ through a connected headset. The ‘pgm 1’ and ‘pgm 2’ dials adjust the audio levels of those feeds, and the ‘incom’ dial adjusts the overall volume. The ‘mic’ switch allows the operator to turn their headset microphone ‘on’ or ‘off’.

Each intercom also has 2 selectable channels, a production channel and an engineering channel. This means that for broadcast setups with a large crew, you can split your crew communications between the two channels. The production channel lets you communicate with the director, producer and other crew members in the control room or broadcast truck, whilst the engineering channel lets you communicate with the lighting crew, technical operators and other camera operators. You can use the 'talkback' page in the menu of your Blackmagic Studio Fiber Converter to select the source for each channel as 'SDI + DB25' or 'intercom tally DB25' on your Studio Fiber Converter. For more information refer to the 'operating the studio fiber converter' section.

The Blackmagic Camera Fiber Converter also includes a standard 10 pin connection for tracker talkback, which is perfect when both headset connections are in use and you need to feed an additional talkback connection for your crane operator.

TIP Effective two-way communication between camera operators and the production and engineering crew is essential for busy broadcast and studio productions. Blackmagic Camera Fiber Converter has a 'call' button so camera operators can alert production and engineering crew and talk via their intercom headsets. Pressing this button flashes a numbered 'press to talk' button on ATEM Talkback Converter 4K, and makes the tally indicator on the LCD of Blackmagic Studio Fiber Converter flash. Likewise, if crew in a control room or broadcast truck have an urgent need to talk with a camera operator, they can press the 'call' button for that camera on the ATEM Camera Control panel. This makes the tally light on the Camera Fiber Converter flash and the tally light on the camera's URSA Viewfinder or URSA Studio Viewfinder flash.

Using Tally

The tally indicator on the front of the panel, provides a traditional tally indicator with red for program and green for preview, so that you know when the camera you are operating is on air.

Status Indicators

The 'power', 'tally' and 'fiber' status LEDs at the top of the converter will illuminate different colors depending on the status of the unit. When the fiber cable is unplugged, no lights are illuminated.

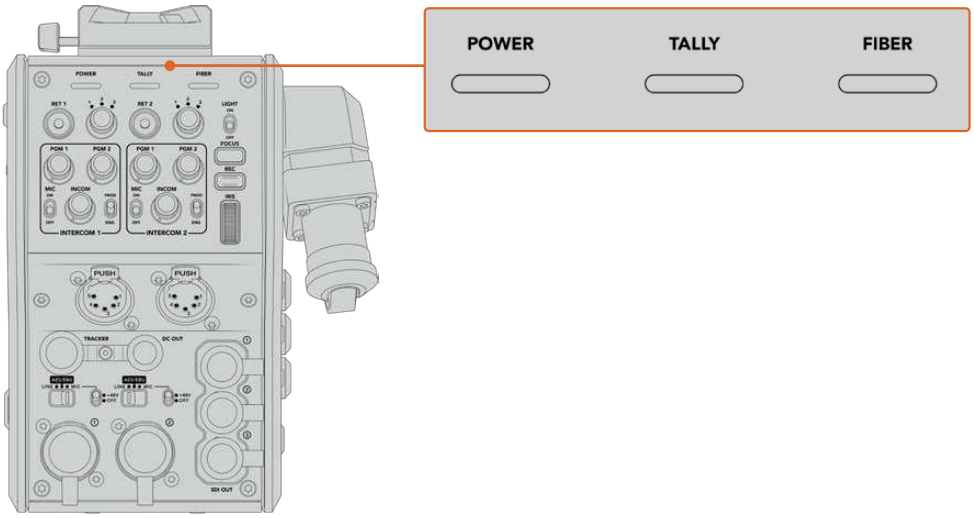

The status LEDs will illuminate different colors to let you know the status of the unit

Below is a description of each LED color, LED action, and the status represented:

Power	**Constant Red**	When the SMPTE hybrid fiber optic cable is connected to a powered Blackmagic Studio Fiber Converter, and the other end of the cable is connected to Blackmagic Camera Fiber Converter, the power LED on the converter turns red to indicate that it is receiving power, and is in a low power state. In this low power state, intercom functionality is enabled but the full power required to operate the unit has not yet been enabled. If the power LED remains red for an extended period of time and does not turn green, check that both ends of your SMPTE hybrid fiber optic cable are securely connected. If the connection remains unstable, check the condition of your fiber cable.
	Constant Green	After a successful fiber connection has been established and Blackmagic Studio Fiber Converter has determined that the cable connection is safe, the power LED will turn green and the camera converter will enter high power mode.
	Flickering between Red and Green	If the power LED flickers between red and green, check that both ends of your SMPTE hybrid fiber optic cable are securely connected. If the connection remains unstable, check the condition of your fiber cable.
Tally	**Constant Red**	The tally LED illuminates red to indicate that the camera you are operating is currently on air.
	Constant Green	The tally LED illuminates green to indicate that the camera you are operating is currently in preview mode.
Fiber	**Constant Red**	When the SMPTE hybrid fiber optic cable is plugged into the camera fiber converter, the fiber LED will turn red to indicate that the handshake process has begun, and the converter is in a low power state. In this state, intercom functionality is enabled for use while setting up or for troubleshooting the camera chain in case the fiber link is down.
	Constant Green	Once a successful SMPTE hybrid fiber optic cable connection is established, the fiber LED will turn green.

Once both the power and fiber lights are green, this indicates that the safety checks have been completed, and the converters have entered high power mode.

Audio Inputs

Your Blackmagic Camera Fiber Converter has two XLR inputs labelled ‘1’ and ‘2’ that allow you to plug in external analog audio from professional equipment such as audio mixers, PA systems or external microphones.

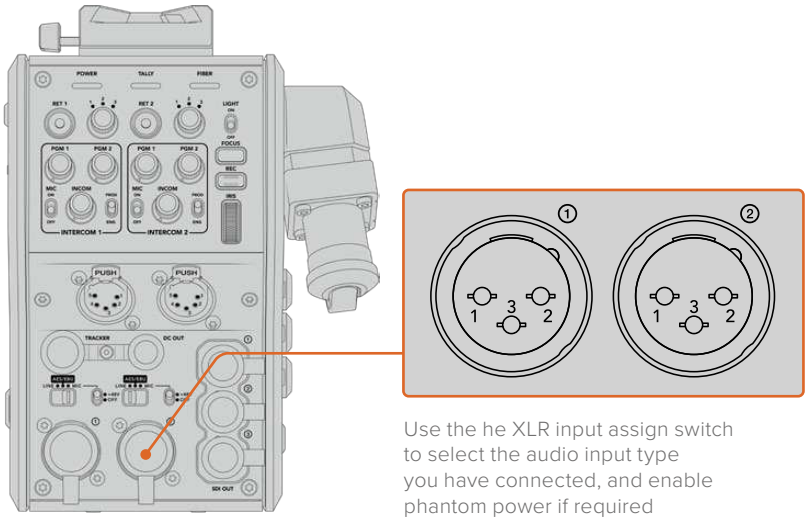

Use the he XLR input assign switch to select the audio input type you have connected, and enable phantom power if required

The camera audio is embedded into channels 1 and 2 of the camera feed, and the 2 audio inputs on the back of the camera fiber converter are embedded as channels 3 and 4. All 4 audio channels are also deembedded at the other end on the studio fiber converter as analog audio outputs.

The 'audio' page in the menu of your Blackmagic Studio Fiber Converter lets you adjust the input levels for audio sources connected to the XLR inputs on your Blackmagic Camera Fiber Converter. For more information refer to the 'operating the studio fiber converter' section. Once connected, you can use the XLR input assign switch to set how the XLR inputs behave when selected as an input source. The options available are mic audio, line level audio and AES digital audio.

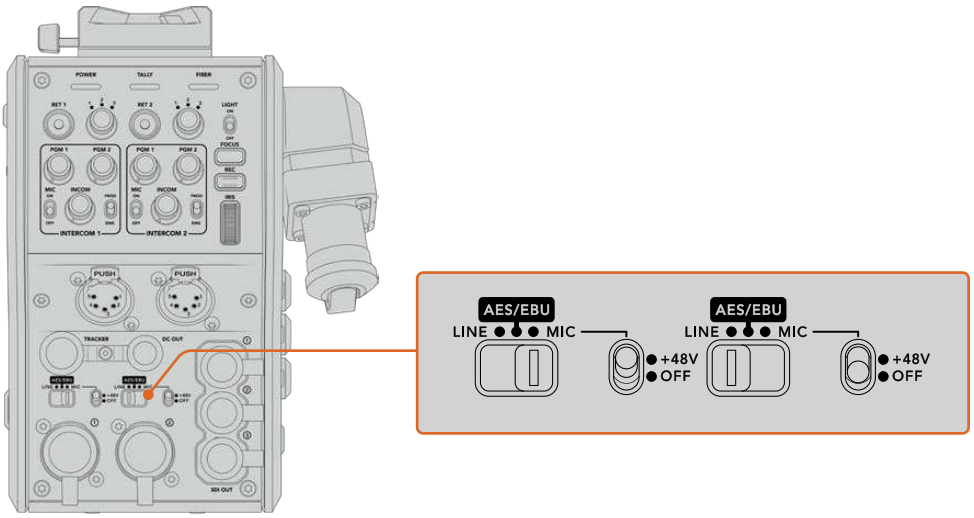

If you would like to connect microphones that aren't self powered, you can enable 48V phantom power. Move the phantom power switch to '+48V' to enable phantom power for any microphone connected to the XLR below, or 'off' to disable phantom power.

IP Video

A connected SMPTE Fiber cable provides for a 10-Gbit IP link between your Camera Fiber Converter and the Studio Fiber Converter. This allows all of your video and return feeds to be IP video based using high end, visually lossless broadcast quality 10-bit video encoding and decoding. All other connections such as talkback, tally, camera control and lens control are also converted to low-latency IP so you get incredibly reliable performance.

Power Specifications

The Blackmagic Studio Fiber Converter provides power for Blackmagic Camera Fiber Converter, your camera and it's accessories. A molex connector plugs into the molex socket on your camera's rear panel to send power to your camera from the Camera Fiber Converter.

If you need to position your camera at a distance of more than 2.1 km from the broadcast truck, and your camera and converter are not receiving enough power over the long cable run, you can power the camera and converter locally by having the 4 pin XLR from the camera's power supply plugged into the +12V input on your URSA Broadcast G2 or URSA Mini. The power will be sent through the molex connector to the Camera Fiber Converter.

The '+12V out' connector, sometimes referred to as a 'D-tap' or 'P-tap' allows you to power accessories like an external monitor or a large box lens, with 12V DC nominal at up to 500 mA. The 'DC out' connector provides an additional option for powering accessories like an external monitor.

A pinout table for the DC out connector is provided below.

DC out connector Pinout Diagram

External view	Pins	Signal	I/O	Specifications
'DC out' connector	1	Unregulated GND	–	GND for Unregulated Out
	2	NC	–	No connection
	3	NC	–	No connection
	4	Unregulated Out	Out	12V DC nominal at up to 500 mA.

Additional Camera Controls

When URSA Broadcast G2 or URSA Mini is being used as a studio camera, we have added camera controls on the fiber converter including iris and focus control, so you can control compatible lenses from behind the camera. This is helpful if you don't have a camera control operator controlling the lens remotely.

As a studio camera, URSA Broadcast G2 and URSA Mini still have the ability to record internally, so the record button lets you trigger internal recording on the camera.

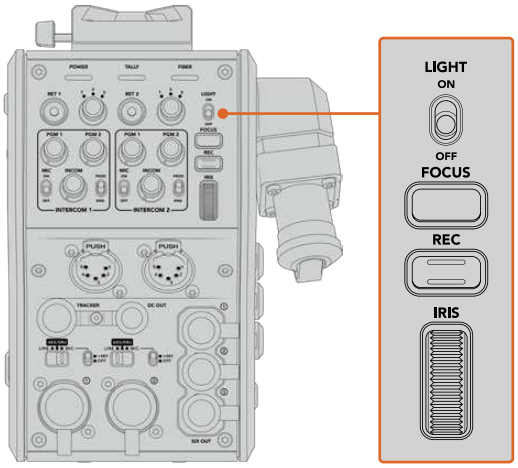

Light

Turns on the backlight to illuminate the operation panel, so that all your controls can be seen easily when operating in a dark environment.

Focus

Pressing the button marked 'focus' will trigger the autofocus if you are using a lens that supports autofocus.

Record

Pressing the button marked 'rec' will trigger the recording when pressed, and will stop recording when pressed again.

Iris

If you are using a compatible active lens that allows control from the camera, you can open or close the iris using the 'iris' wheel. Rotate the wheel up or down to open or close the lens aperture.

Operating the Studio Fiber Converter

Selecting the LCD Source

When powered on, your Blackmagic Studio Fiber Converter's large LCD will display the feed from your camera. As the central base unit, the Studio Fiber Converter takes the program feed from your switcher plus all return sources, and feeds them to the Blackmagic Camera Fiber Converter via the SMPTE fiber cable.

The built in LCD lets you monitor the camera feed and each source connected to the return feed inputs. It provides a heads-up type display with status information and audio meters.

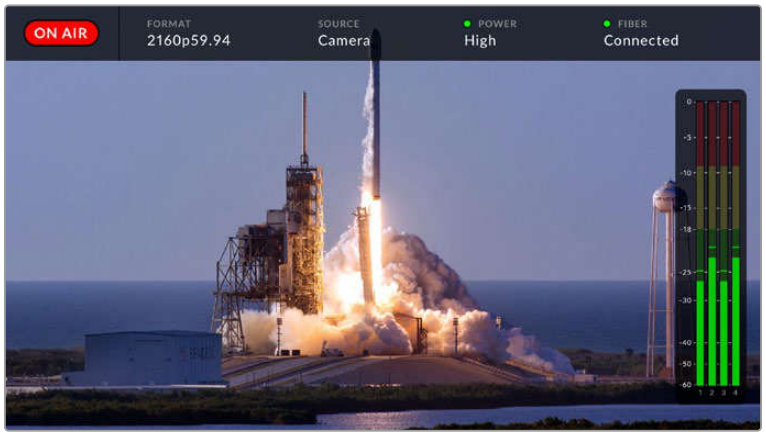

The overlays allow you to confirm the name and format of the source you are monitoring when switching between feeds

On Air

The red 'on air' icon will be displayed when the connected camera is being used in the program feed, and will remain blank when not on air.

Format

Displays the resolution and frame rate of the current source.

Source

Displays the current source name.

Power

Displays the current power status. 'Low' will be displayed with a red status light during connection to indicate a low power state and 'high' will be displayed with a green status light after the unit has entered high power mode. For more information, refer to the 'status indicators' section in the 'operating the camera fiber converter'.

Fiber

Displays the current fiber status. 'Connecting' will be displayed with a red status light during the initial connection process and 'connected' will be displayed with a green status light once a successful SMPTE hybrid fiber optic cable connection is established. For more information, refer to the 'status indicators' section in the 'operating the camera fiber converter'.

Audio Meters

The peak audio meters display audio levels when using camera audio embedded into channels 1 and 2 of the camera feed. Channels 3 and 4 correspond with audio sources connected to the two XLR inputs on the back of your Blackmagic Camera Fiber Converter. The display is calibrated to dBFS units and features peak hold indicators which stay visible for a short time so you can clearly see the maximum levels reached.

Using the Menu

Pressing the up and down arrow buttons will scroll through the four possible sources 'camera', 'return 1', 'return 2' and 'return 3'. Press the 'menu' button to enter the menu system and adjust your settings. The arrow buttons can then be used to navigate through the various menu screens and the options within each screen, whilst the 'set' button will confirm your selection. The settings in the menu are divided between 'audio', 'talkback' and 'setup' pages.

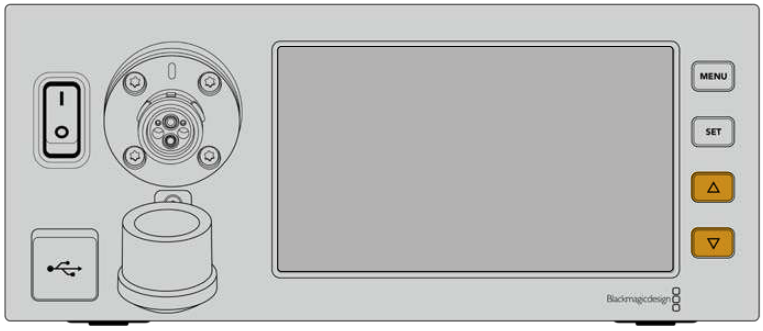

Press the up and down arrow buttons to scroll through the four possible sources and to navigate through the menu

Audio

The 'audio' page lets you adjust the input levels for audio sources connected to the XLR inputs on your Blackmagic Camera Fiber Converter.

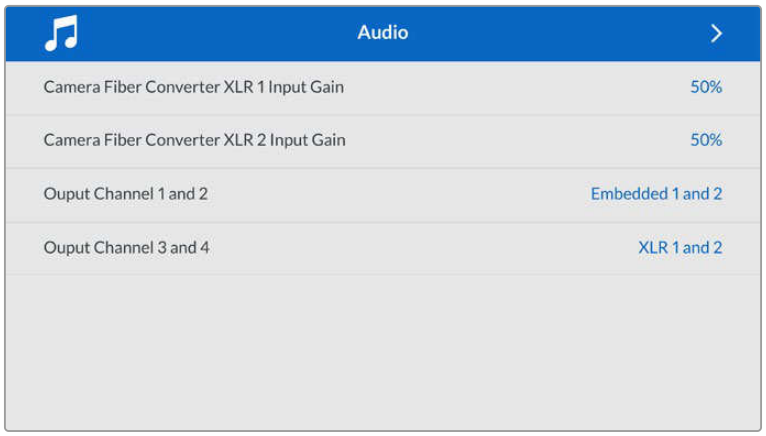

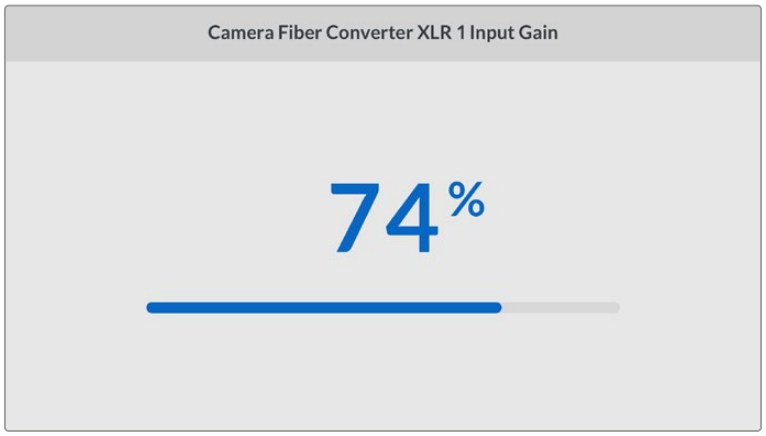

Use the arrow buttons to adjust the input level for each XLR input and the 'set' button to set the level

You can configure which audio channels from the Camera Fiber Converter get mapped to the embedded SDI and XLR outputs. The embedded audio channels from URSA Mini or URSA Broadcast G2 are on channels 1 and 2 by default. Line or Mic level XLR inputs that are plugged into the Camera Fiber Converter are mapped to channels 3 and 4 by default. You can adjust the output channel settings to change these mappings from their default settings. If either of the XLR inputs on the Camera Fiber Converter are set to AES, this expands your channel mapping options to include channel 5 and 6, which are sent on your embedded SDI output.

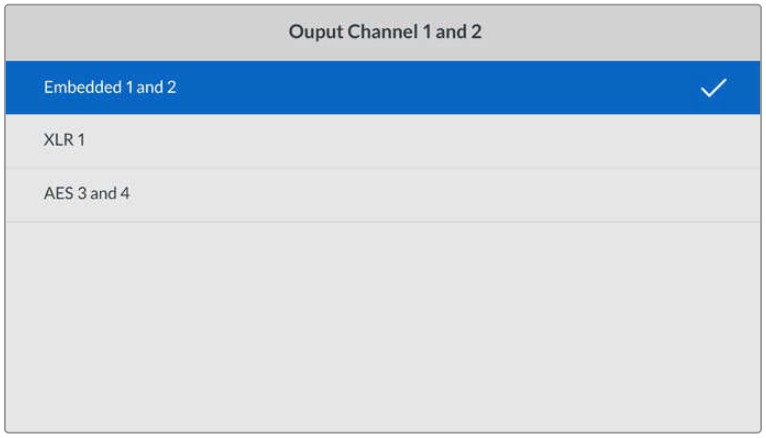

Mapping the embedded XLR channels from the camera to output channel 1 and 2

Talkback

Use the 'talkback' menu to select your program audio source and talkback source for the production and engineering channel. Set the talkback source to 'SDI + DB25' or 'intercom tally DB25' on your Studio Fiber Converter.

You can also adjust the 'headphone gain' and 'headset microphone gain' for each intercom headset to account for the impedance levels of the headsets. The 'phantom power' settings let you switch on the phantom power being sent to the respective headset. Adjust the 'sidetone level' settings to let camera operators hear their own voice in their headset at a clear and comfortable level.

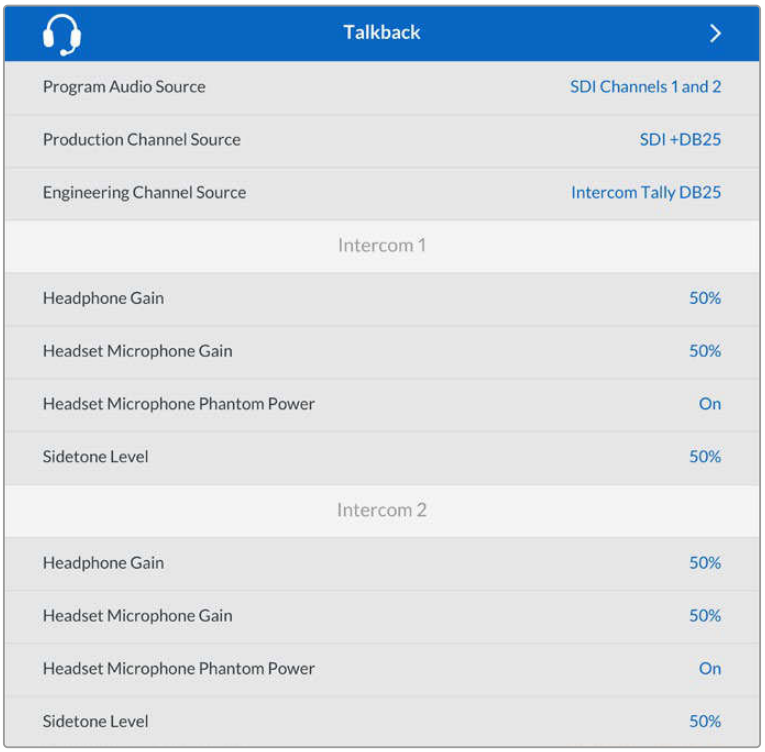

The intercom section will be grayed out when nothing is connected to the XLR inputs and will display 'connecting' during connection

Setup

The 'setup' menu lets you configure the PTZ source, select the language for the menus, and select the type of SDI level return.

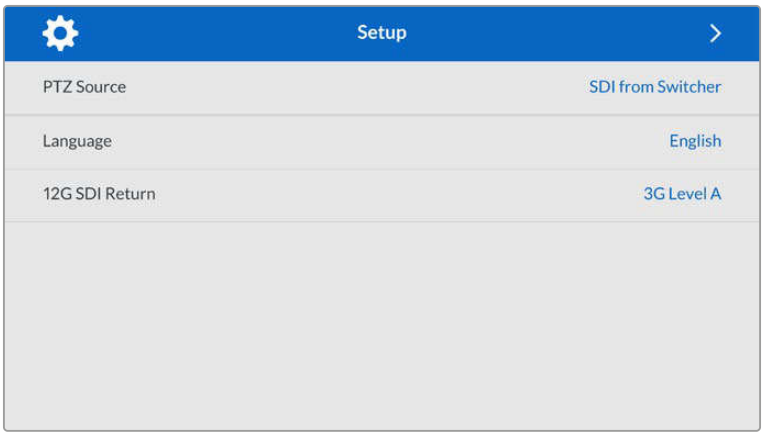

Select the source of PTZ commands using the PTZ source setting. You can select from 'SDI' or '9-pin', which correspond with the 'return in' SDI inputs and the DE-9 connector for PTZ on the rear of your Blackmagic Studio Fiber Converter.

This means that you can control a PTZ camera's pan, tilt and zoom on an ATEM switcher and send these PTZ commands to your Blackmagic Studio Fiber Converter via SDI. These commands will be sent along the SMPTE fiber cable to your Blackmagic Camera Fiber Converter, where they will be de-embedded and output via the DE-9 serial connector, for connection to a PTZ motorized head.

You can also connect a PTZ controller to your Blackmagic Studio Fiber Converter via the DE-9 connector, to control a remote head at the camera end.

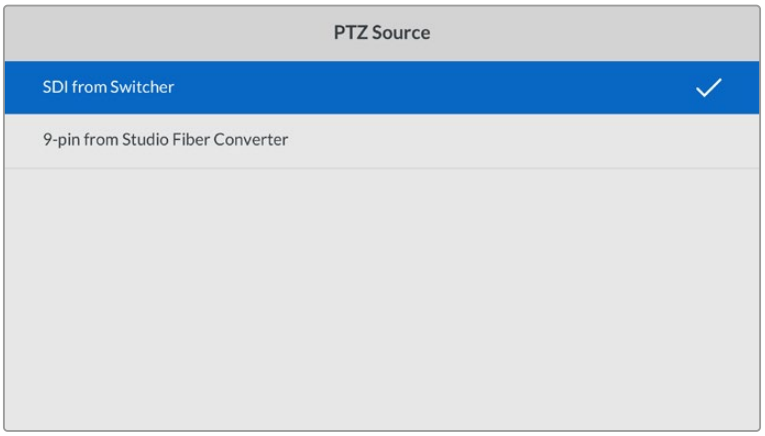

The settings menu page provides the option to select 'SDI' or '9-pin' as the source of PTZ commands

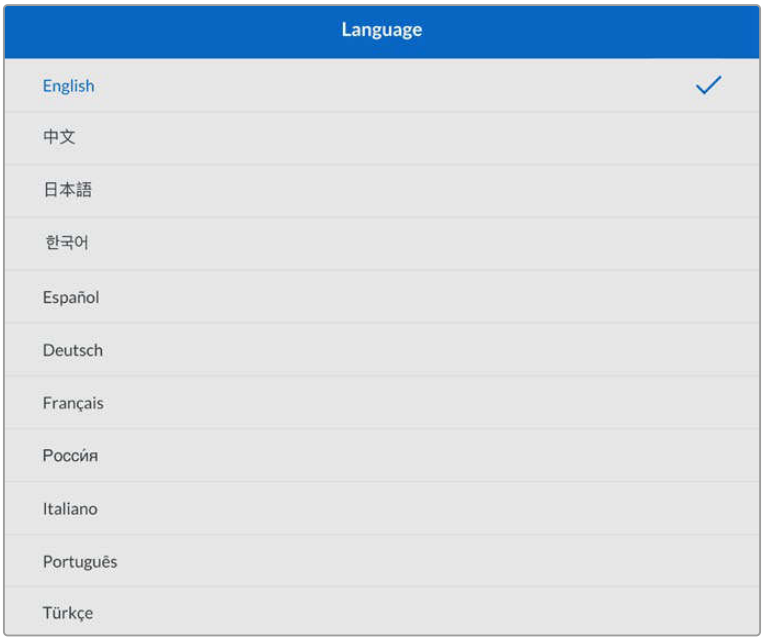

The 'language' setting sets the language for the menus. Studio Fiber Converter supports 11 popular languages: English, Chinese, Japanese, Korean, Spanish, German, French, Russian, Italian, Portuguese and Turkish. The language page will also appear on initial start up and after you update the internal software.

The '12G SDI return' option sets whether to down convert 12G program return signals to 3G Level A or 3G Level B. All 12G signals sent into return inputs on Studio Fiber Converter get down converted on their way to the Camera Fiber Converter.

Rack Mounting the Studio Unit

If you're running multiple Blackmagic Studio Fiber Converters, you can use Blackmagic Studio Fiber Rack Kit to install your converters into a broadcast rack or road case. Using the rack kit, you can mount two studio units in a rack side by side, or fitted to either side. A blanking panel is supplied with the Studio Fiber Rack Kit to cover the empty side of the rack if you only want to mount a single unit.

Your Studio Fiber Converter is two rack units high, and is half the width of a standard rack shelf, so two Studio Fiber Converters can fit neatly side by side in a 2RU rack space.

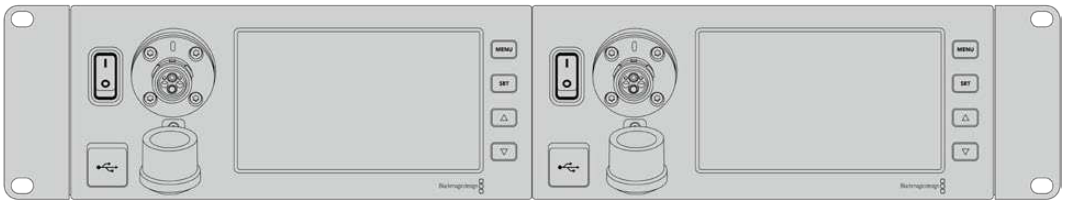

Blackmagic Studio Fiber Converters mounted side by side

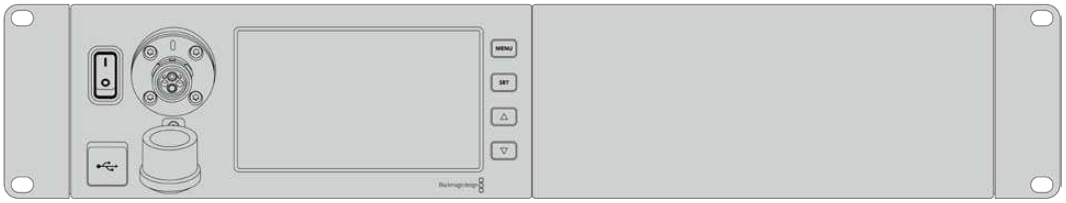

The supplied blanking plate can be used to cover an empty rack space if needed

The Blackmagic Studio Fiber Rack Kit contains the following items:

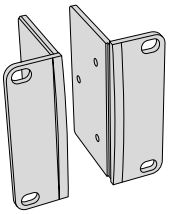

2x Rack ears

Attach rack 'ears' to the outside edge of Blackmagic Studio Fiber Converter for mounting in a rack.

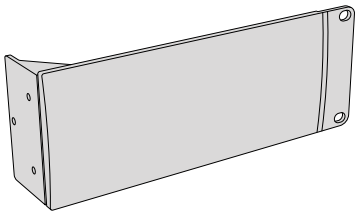

1x Half rack width blanking panel

The blanking panel has a mounting ear on one side so you can cover the empty rack space if you are installing a single unit. The illustration shows the ear on the right side. Simply rotate the panel 180° to mount it to the other side.

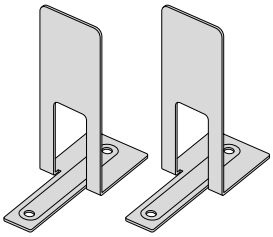

2x Support brackets

The T-shaped support brackets attach underneath the two Studio Fiber units where the two units meet at the front and the rear to provide support.

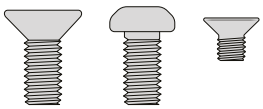

Screws

8 x M4 10mm	**4 x M4 8mm**	**5 x M3 5mm**
Rack ear screws	Blanking panel screws	Support bracket screws

Preparing the Blackmagic Studio Fiber Converter for installation into a rack:

1 Position the blanking panel on one of the sides of your Studio Fiber Converter, depending on whether you would like the unit to sit on the left or right side of the rack shelf. The front face of the blanking panel should be parallel with the front panel of the unit.

2 Attach the blanking panel to the side of your Studio Fiber Converter near the front using three of the supplied blanking panel screws.

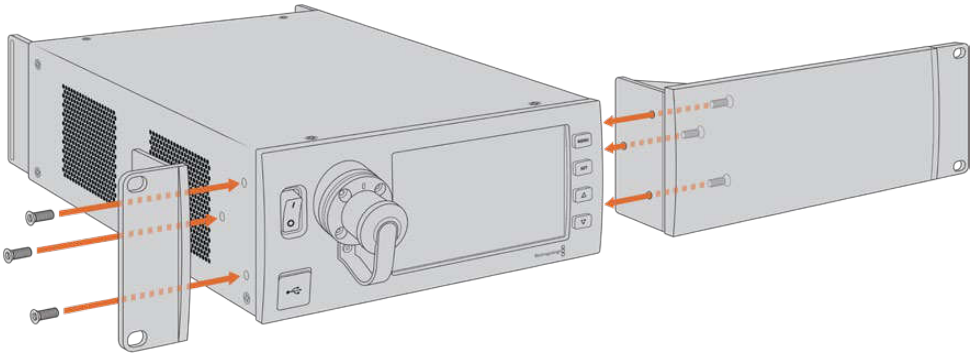

3 Use three of the supplied rack ear screws to attach a rack ear to the other side of your Studio Fiber Converter.

With the rack ear and blanking panel attached, you can now install your converter into a standard two rack unit space using the mounting holes on both sides and standard rack screws.

Preparing two Blackmagic Studio Fiber Converters for side by side installation into a rack:

If you are mounting two converters side by side, you can attach them to each other using support brackets which secures them together so you can mount them more easily.

To secure the two units:

1 Turn the two converters over so that they are upside down and placed side by side. Remove two rubber feet from the edges of each converter where they meet.

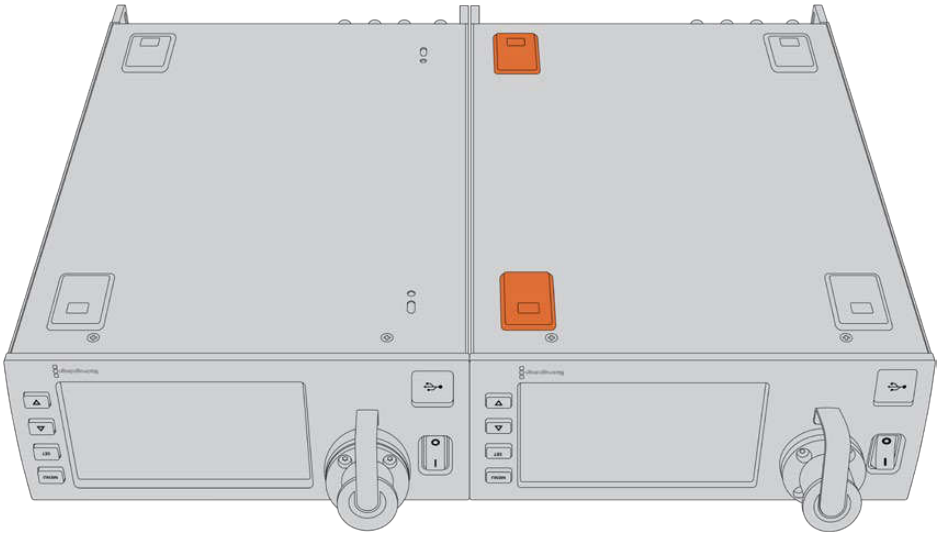

2 Attach the two supplied T-shaped support brackets to the base of the two Studio Fiber units at the front and the back where the two units meet, using the screw holes provided and the supplied support bracket screws.

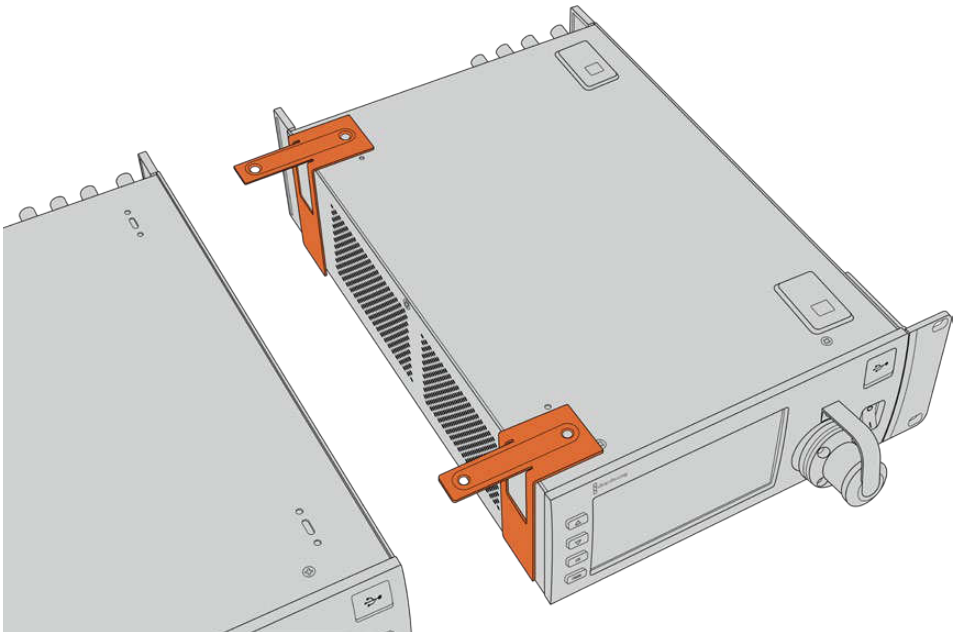

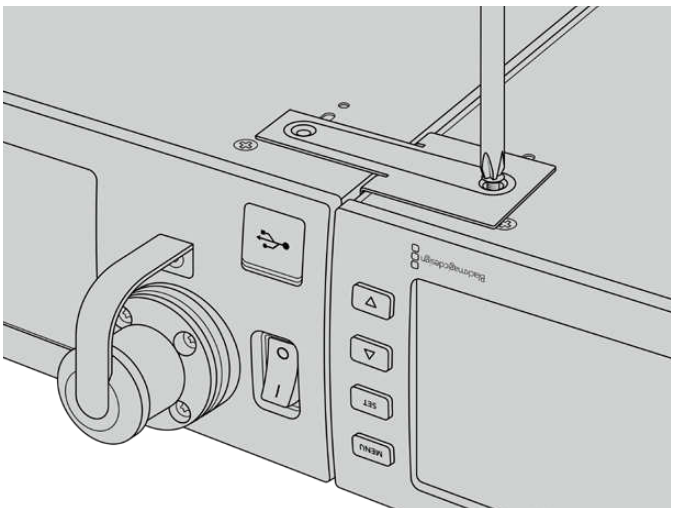

3 Turn the attached units back over and attach the rack ears to the outer edges near the front of both converters, using the supplied rack ear screws. Your converters are now ready to be installed into a rack using the mounting holes on both sides and standard rack screws.

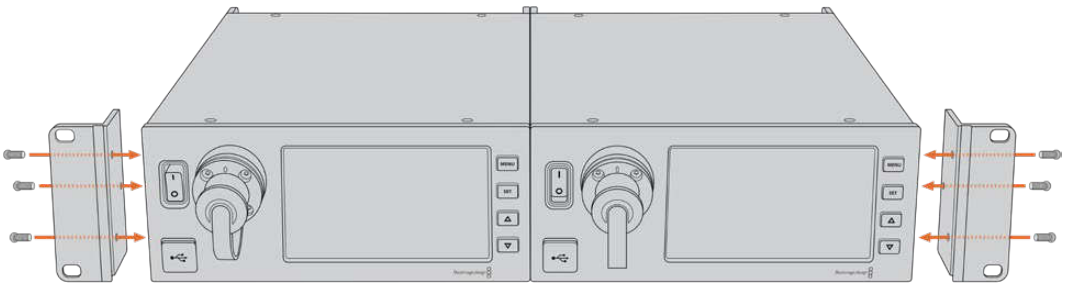

Camera Unit Connections

Connections are located on Blackmagic Camera Fiber Converter's rear and side panels. When the connections are not in use, the rubber caps should be replaced to ensure weather sealing in rain and other outside environments. This is especially true for the SMPTE fiber connection, as dust particles can very quickly collect on the polished edge of the glass fibers which can disrupt signal flow. It's always a wise choice to remove the caps on both the cable and unit connector immediately before connection, and then replace the caps immediately after disconnection.

Camera Power Connection

Power is primarily supplied to the camera unit and your camera from the studio converter via a SMPTE hybrid fiber cable. This also powers all accessories that may be attached to the camera, for example Blackmagic URSA Studio Viewfinder.

However, you can also power the Blackmagic Camera Fiber Converter via the camera if your camera has its 12V XLR connector plugged into a power supply. This is not normally required, but is an option if you have your camera positioned further than 2 kilometers away from the studio unit where power may not be as reliable over the SMPTE fiber cable.

PTZ Interface

The DE-9 serial connector allows you to connect to a PTZ motorized head. For example, if your Blackmagic URSA Broadcast G2 or URSA Mini is attached to a camera crane using a pan, tilt, zoom head that is controlled remotely. You can select the source of PTZ commands being sent to your camera in the menu of your Blackmagic Studio Fiber Converter. The source of the commands can be set to the DE-9 connector on your Studio Fiber Converter or an SDI feed coming from an ATEM switcher. For more information refer to the 'operating the studio fiber converter' section.

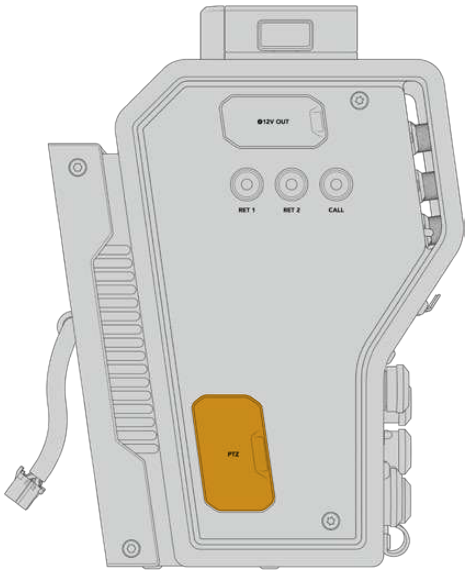

PTZ Interface

Talkback Connection

The two female 5 pin XLR connectors let you plug in two headsets, which allows two people to communicate via talkback simultaneously. For example, the camera operator's headset can be plugged into the first XLR connector, and a crane operator or fellow crew member, such as a sound operator, could plug into the second XLR headset connector. A pinout diagram for the headset XLR connector is included below.

Headset XLR Pinout Diagram

External views	Pins	Signal	I/O	Description
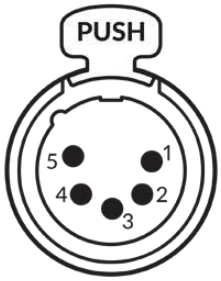 5 pin XLR 'headset' connector	1	Intercom MIC (Y)	In -	The intercom mic input supports electret condenser mics and dynamic mics, which can be balanced or unbalanced. Pin 1 is the mic signal common, and pin 2 is the mic signal input for both types. With electret mics, a DC bias supply is also output via the same mic signal input pin.
	2	Intercom MIC (X)	In +	
	3	GND	GND	GND
	4	Intercom left	Out	
	5	Intercom right	Out	

The corresponding intercom controls are located above each headset connection.

For more information on how to use the intercom controls, refer to the 'Operating the Camera Fiber Converter' section.

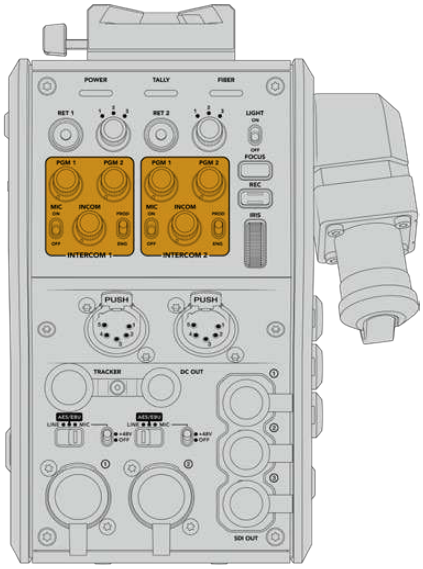

The intercom controls are used to mix talkback audio levels

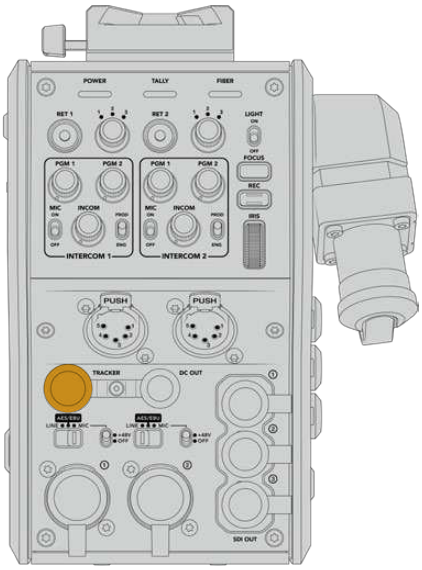

Tracker Interface connector

Tracker Interface

The 10 pin ‘tracker’ connector provides a multiplexed output for talkback and tally signals, plus data such as teleprompter information. This output is commonly used by support crew operating production equipment such as a camera crane.

A pinout diagram is provided in this section if you want to build your own cable.

Tracker Output Pinout Diagram

External view	Pins	Signal	I/O	Specifications
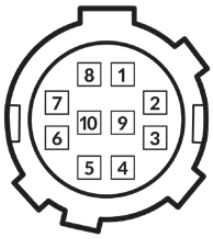 10 pin ‘tracker’ connector	1	Tracker left	Out	Tracker output, -20 dBu unbalanced
	2	GND (Talk)	–	GND for tracker talk
	3	GND (Receive/PGM/tally)	–	GND for receive/PGM/tally
	4	Tracker right	Out	Tracker output, -20 dBu unbalanced
	5	Unregulated	Out	12V DC (nom), 500mA (max)
	6	GND (Unregulated)	–	GND for unregulated
	7	Tracker talk (X)	In	Tracker talk 0 dBu /-20 dBu, high impedance balanced
	8	Tracker talk (Y)	In	
	9	G Tally	Out	On: 12V Off: high impedance (open)
	10	R Tally	Out	On: 12V Off: high impedance (open)

DC Connection

You can power additional accessories, for example an external monitor, via the DC out connector.

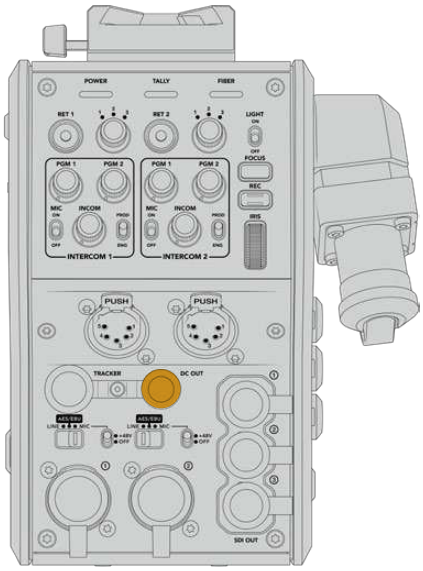

The DC out connector lets you power additional accessories, such as a monitor or external recording equipment

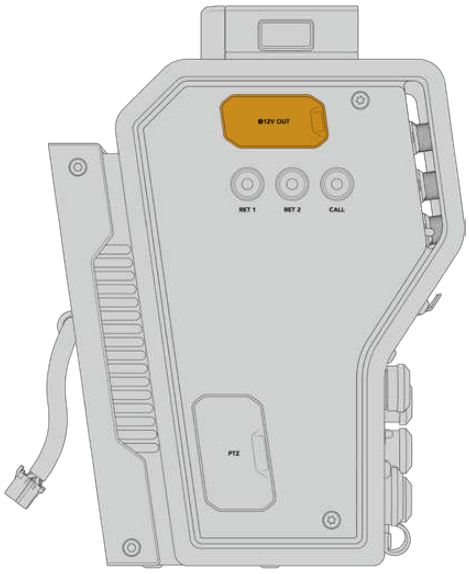

D-Tap Output

D-Tap Output

The +12V output on the left side panel is often referred to as a ‘D-tap’ or ‘P-tap’ and lets you power accessories like a monitor or a large box lens. The output supports box lenses that require +12 Volts DC nominal at 2 amps.

Reference Output and Operation

The reference output can be used to connect a reference signal to your camera via a BNC cable.

To connect a reference signal to your camera:

1. Connect the reference output from the Blackmagic Camera Fiber Converter, marked ‘REF OUT’, to the reference input on your camera marked ‘REF IN’ using one of the small SDI cables supplied with your camera fiber converter.
2. Set your camera’s reference setting to the reference input.

A sync reference signal lets you genlock video equipment to a common reference, so all equipment shares the exact same timing. This means all video sources are synced and will switch smoothly.

ATEM switchers have built in re-synchronizers, so if you are using Blackmagic cameras with an ATEM Switcher then you don’t need to worry about connecting a sync reference. The camera will lock to the incoming SDI program feed from the ATEM switcher, so all you need to do is make sure the ‘program’ input is selected in your URSA Broadcast G2 or URSA Mini’s reference setting on page two of the ‘setup’ menu. The re-synchronizing process will add a frame delay.

If you want to reduce the latency of the re-synchronizing process within the ATEM, firstly apply a reference signal to the URSA Broadcast G2 or URSA Mini, then adjust the back timing so the line input is before the switch timing of the ATEM.

To adjust the reference sync on the URSA Broadcast G2 or URSA Mini, enter the ‘setup’ menu and change the line number under ‘reference’.

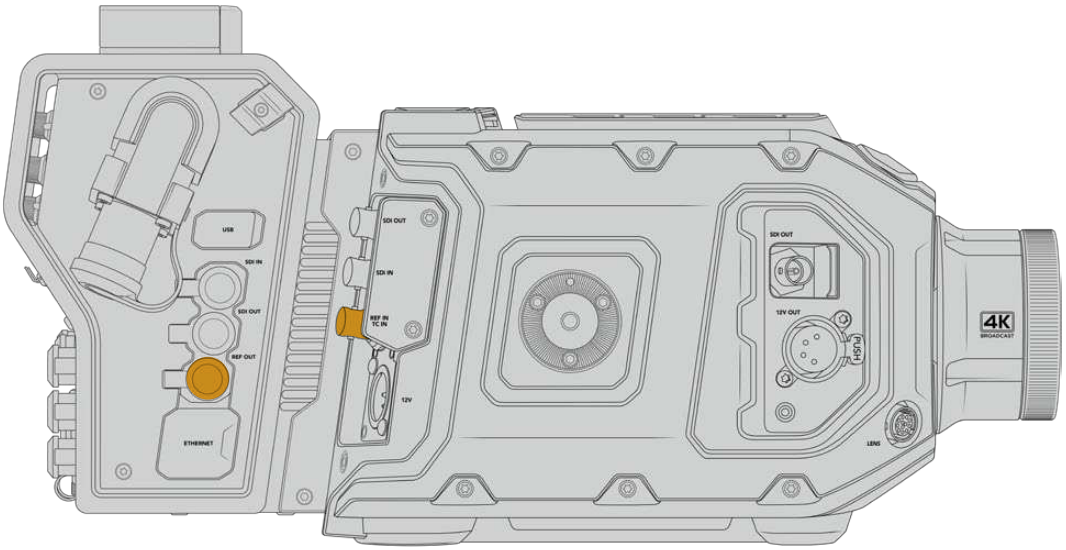

If you’re using an external reference signal, connect the reference output from the camera fiber unit to URSA Broadcast G2 or URSA Mini’s reference input.

Studio Unit Connections

The rear panel of the Blackmagic Studio Fiber Converter provide SDI return feed and reference BNC connectors, intercom and tally DB-25 connector, PTZ 9 pin serial port, audio outputs, and Ethernet.

All SDI inputs support 12G-SDI for video formats up to Ultra HD 2160p60.

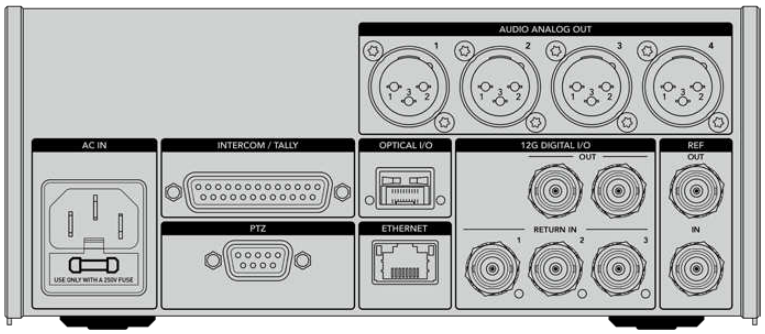

12G-SDI Output

The two 12G-SDI outputs are for connecting the camera signal from the studio unit to any of your switcher's camera SDI inputs. The second connector can be used to output the same signal to other video equipment, for example a Blackmagic Videohub router, SmartView monitor or a HyperDeck Disk Recorder.

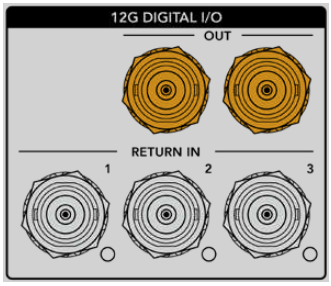

The 12G-SDI outputs allow for signals from 720p50 up to 2160p60

Return SDI Inputs

The 12G-SDI return feed BNC connectors give you the option to plug in up to three return SDI feeds. For example, the program feed from a switcher should be connected to return 1 and have a matched frame rate to that of your camera. Other sources like a second camera output, HyperDeck playback, or even a teleprompter can be connected to return feeds 2 and 3. If you are using an ATEM switcher, the program return connected to return 1 will also include tally, talkback, reference and camera control signals.

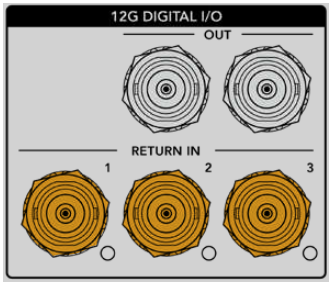

The return SDI inputs allow you to connect up to three return feeds from your switcher. These feeds will be fed to your camera so that they can be viewed by the camera operator, or fed out via SDI to other equipment.

NOTE If you connect Ultra HD to the return inputs, the Ultra HD video will be down converted to 1080p at the same frame rate, so the output from the camera unit will be HD. Down converting the Ultra HD return signals to HD allows for greater bandwidth so you can send multiple return sources.

Reference Input and Output

If you are not using an ATEM switcher and need to lock equipment to a common external reference signal, plug the externally generated signal into the reference BNC input. This sends the reference to the camera unit via the SMPTE fiber cable. The reference BNC output from the studio unit can be used to loop the reference source to other equipment.

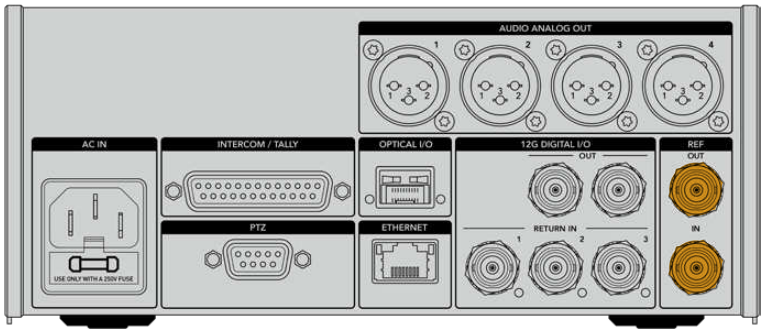

Use the 'ref in' connection to send traditional reference timing from other broadcast equipment to your camera

Talkback Interface

The DB-25 intercom and tally connector lets you connect to third party intercom and tally systems. A pin out diagram is provided below if you need to build a custom cable. Once you have wired up to the pins for engineering, production, tally or program audio input, you will need to set the menu accordingly on your Blackmagic Studio Fiber Converter.

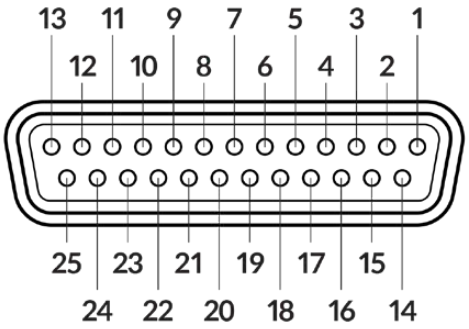

The external view of the 25 pin 'intercom/tally' connector

Talkback Pinout Diagram

Pins	Signal	Specifications
1	ENG(R) IN+	Engineering channel input 0dBu balanced
2	ENG(R) IN-	
3	ENG GND	GND for ENG
4	ENG(T) OUT +	Engineering channel output 0dBu balanced
5	ENG(T) OUT -	
6	PGM IN+	-20dBu
7	PGM IN-	-20dBu
8	PGM GND	-20dBu
9	GND	GND for aux
10	N/C	–
11	Red Tally IN	On = 5-24Vdc, Off= 0Vdc
12	Red Tally GND	–
13	GND	Chassis GND
14	PROD(R) IN+	Production channel input 0dBu balanced
15	PROD(R) IN-	
16	PROD GND	–
17	PROD(T) OUT+	Production channel output 0dBu balanced
18	PROD(T) OUT-	
19	N/C	–
20	N/C	–
21	N/C	–
22	N/C	–
23	N/C	–
24	Green Tally IN	On = 5-24Vdc, Off= 0Vdc
25	Green Tally GND	–

PTZ Interface

Both the studio unit and camera unit has a DE-9 connector so you can connect a PTZ controller at the studio end, and the remote head at the camera end. The PTZ commands are embedded in the SDI signal connected between the units via the SMPTE fiber cable.

The settings menu on Blackmagic Studio Fiber Converter lets you select the source of PTZ commands that are sent to your Blackmagic Camera Fiber Converter. You have the option to select from the PTZ connector on the back of the Studio Fiber Converter or a program SDI feed coming from an ATEM Switcher instead. For more information, refer to the ‘operating the studio fiber converter’ section.

PTZ Interface Pinout Diagram

External view	Pins	Signal
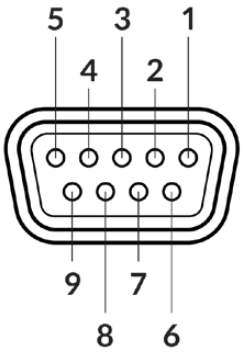 9 pin 'PTZ' connector	1	GND
	2	RS422 Tx-
	3	RS422 Rx+
	4	GND
	5	N/C
	6	GND
	7	RS422 Tx+
	8	RS422 Rx-
	9	GND

Audio Outputs

The four XLR audio outputs on the studio unit give you the option to output the audio plugged into inputs 1 and 2 from your URSA Broadcast G2 or URSA Mini camera, and the two XLR audio inputs on the Camera Fiber Converter.

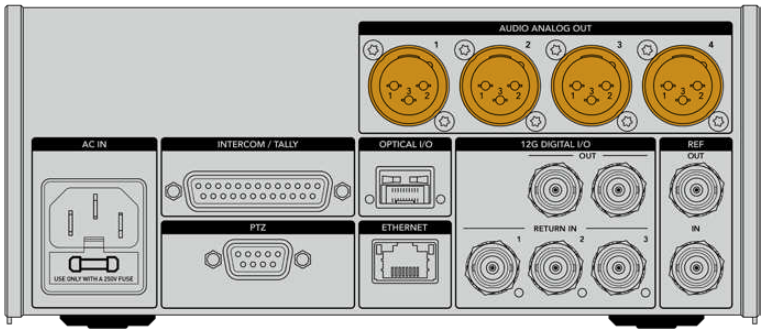

Outputs 1 and 2 on the studio unit correspond to embedded XLR input channels 1 and 2 on URSA Broadcast G2 or URSA Mini by default. Outputs 3 and 4 on the studio unit correspond to XLR inputs 1 and 2 on the Blackmagic Camera Fiber Converter by default. You can use the menu to change these settings for mapping. For more information, see the 'using the menu' section.

Updating Internal Software

From time to time Blackmagic Design releases updates that can enhance and enable features on your Blackmagic Fiber Converters. We recommend checking the Blackmagic Design website regularly to ensure your fiber converters are using the latest internal software. Update your Fiber Converters using the Blackmagic Camera Setup Utility software.

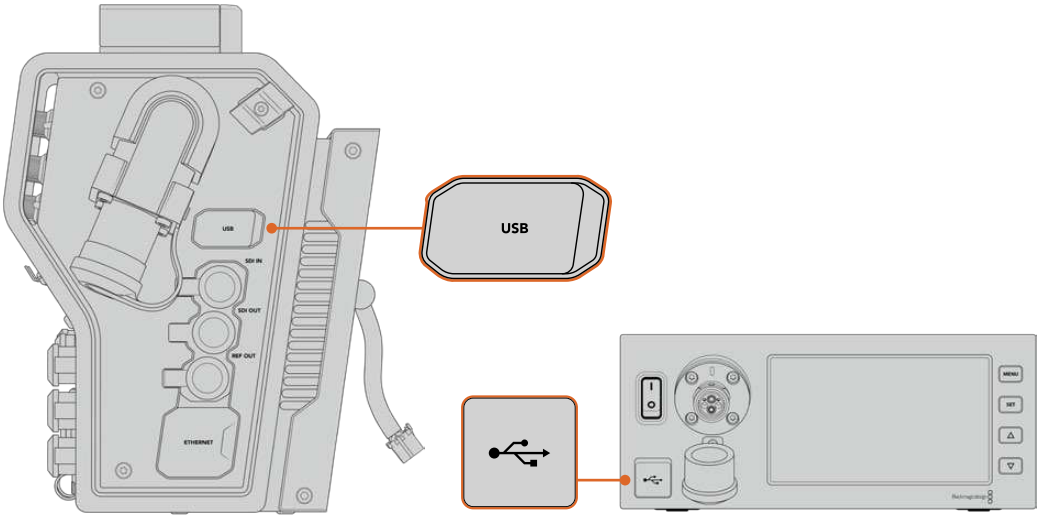

The USB-C ports on the Blackmagic Fiber converters let you update their internal software.

Updating Blackmagic Camera Fiber Converter

Your Camera Fiber Converter will need to be powered when updating, so we recommend keeping the converter connected to URSA Broadcast G2 or URSA Mini during the update process.

It's important that you unplug the SMPTE Fiber cable from your Camera Fiber Converter, and power your camera via the supplied URSA camera Power Supply instead for consistent power.

Blackmagic Camera Fiber Converter has a USB-C connector on the right side of the unit for updating its internal software. Connect your computer to this USB connector and launch Blackmagic Camera Setup Utility. You will be prompted to update if your computer detects that your Camera Fiber Converter is using an outdated version. Follow the on screen prompts to update your converter's internal software.

Updating Blackmagic Studio Fiber Converter

Your Studio Fiber Converter will need to be powered when updating, so we recommend keeping the IEC power cable plugged into the power connector on the studio unit's rear panel during the update process.

Blackmagic Studio Fiber Converter has a USB-C connector on the front of the unit for updating its internal software. Connect your computer to this USB connector and launch Blackmagic Camera Setup Utility. You will be prompted to update if your computer detects that your Studio Fiber Converter is using an outdated version. Follow the on screen prompts to update your converter's internal software.

Interchangeable Lens Mount

Blackmagic URSA Broadcast G2 is shipped with its own custom B4 mount attached, as well as an additional EF mount. The interchangeable lens mount means you can also attach Blackmagic URSA Mini Pro PL or URSA Mini Pro F Mount kits to your camera. Lens mount kits are available from Blackmagic Design Resellers.

NOTE A B4 mount is available for Blackmagic URSA Mini Pro but this is not the same as the B4 mount on URSA Broadcast G2 camera and is designed for a different sensor. Use only the B4 mount that originally came with your URSA Broadcast G2 camera.

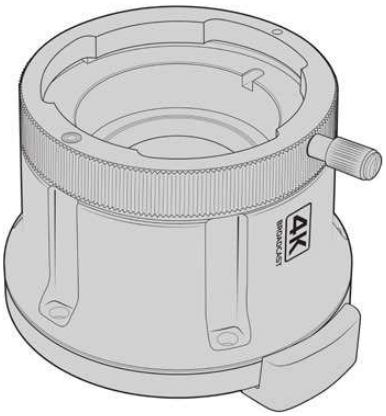

Broadcast B4 mount

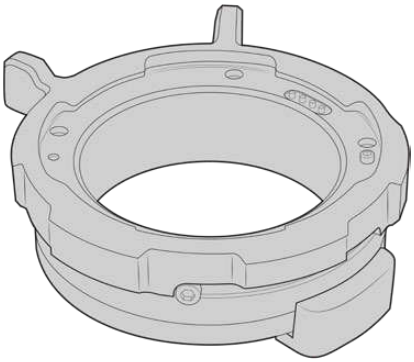

PL mount

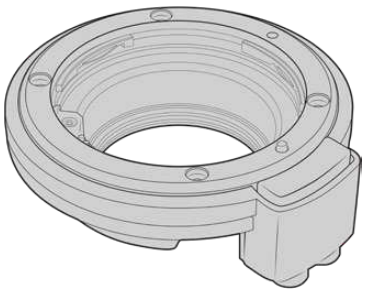

EF mount

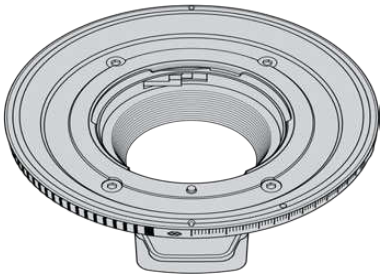

F mount

With the ability to interchange four separate mounts, you have the freedom to use different lenses based on the type of assignments you're working on. For example, the EF mount lets you use high quality stills lenses, the B4 mount is perfect if you want to use par-focal zoom lenses for electronic news gathering or wedding shoots, while the PL mount lets you use high end, robust cinema lenses designed for absolute precision and repeatable control. The F mount gives you access to a huge range of Nikon lenses manufactured from 1959 to today.

Attaching each mount is as simple as unscrewing the original B4 mount and replacing it with the new mount.

Removing the B4 Mount

To remove the B4 mount, simply unscrew the five M3 Hex screws using a 2mm Hex driver.

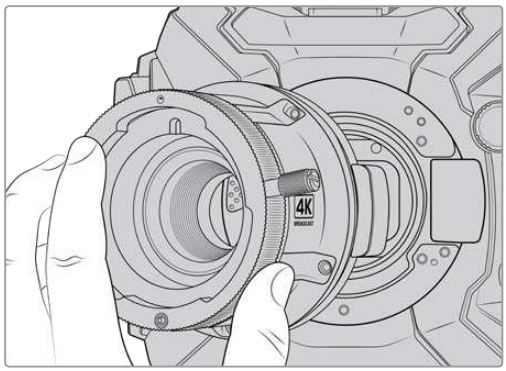

The B4 mount is removed by unscrewing the five M3 Hex screws and lifting the mount from the camera body.

NOTE When removing the original B4 mount, make sure the shim underneath the mount always stays attached to your camera.

Keep reading this section for details about the PL, B4, and EF lens mount kits and how to install each mount to your URSA Broadcast G2.

Blackmagic URSA Mini Pro EF Mount

The EF mount lets you attach EF stills lenses to your URSA Broadcast G2.

The EF mount kit includes:

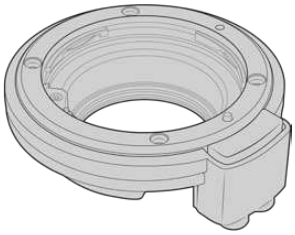

1x EF mount

The EF mount lets you attach common EF stills lenses.

1 x Shim set

The shim set includes the following thicknesses:

0.50mm	0.18mm	0.10mm
0.30mm	0.15mm	0.05mm
0.20mm	0.12mm	0.025mm

1x Baffle tool

The baffle in the EF mount is not removable, however we have included a baffle tool in the EF kit as a spare item you can use if you also have the PL mount.

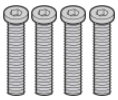

4 x 2mm Hex M3 x 18mm mount screws

The four M3 x 18mm Hex screws are exclusive to the EF mount so you can keep the screws together with the respective mount.

Tools Required

When attaching the EF mount, you will need a 2mm Hex driver. While it's not absolutely required, we recommend using a torque wrench able to accurately set a maximum torque of 0.45Nm to reduce the potential of over tightening the screws.

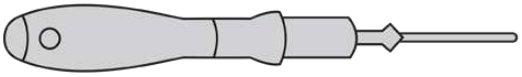

2mm Hex driver

Attaching the EF Mount

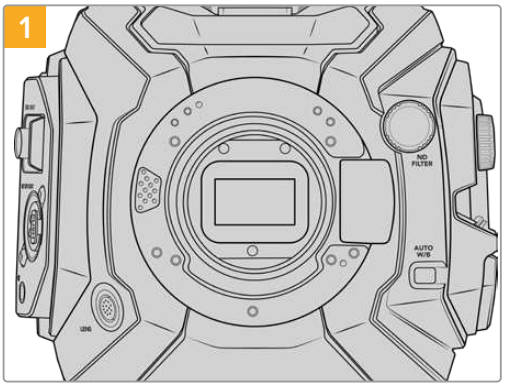

Place Blackmagic URSA Broadcast G2 vertically on a solid, clean bench top to ensure that the mount can be inserted vertically. If changing from the PL to the EF mount, ensure that you have removed the PL baffle before inserting the EF mount.

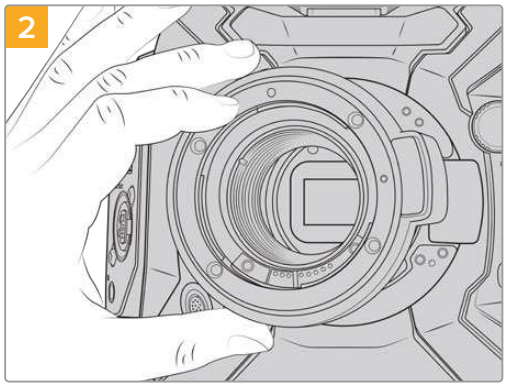

Carefully place the Blackmagic URSA Mini Pro EF mount onto the camera body ensuring the red dot is at the 12 o'clock position.

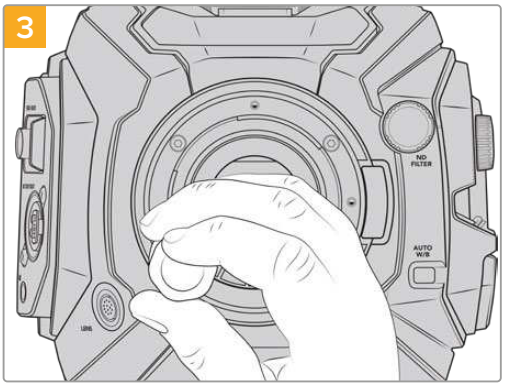

Loosely turn the four mounting screws until initial contact is made with the shoulder of the lens mount.

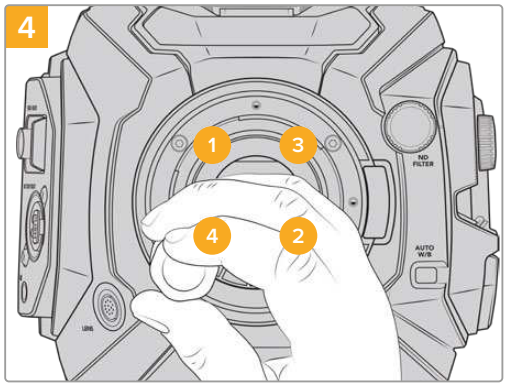

Using the 2mm Hex driver, or torque wrench with 2mm Hex key, apply one full turn of pressure to mounting screw 1, followed by one full turn to screw 2, and repeat for screw 3 and then 4. Continue to apply one full turn to each screw in the sequence above until all screws have reached the maximum torque of 0.45Nm.

NOTE When removing the EF mount, simply follow the instructions in reverse order from step 4 to step 1.

To attach an EF mount lens:

1. Align the dot on your lens with the dot on the camera mount. Many lenses have a visual indicator, for example a blue, red or white dot.
2. Insert the lens into the mount and twist clockwise until it locks into place.
3. To remove the lens, hold down the locking button, rotate the lens counterclockwise until its dot or indicator reaches the 12 o'clock position, and gently remove.

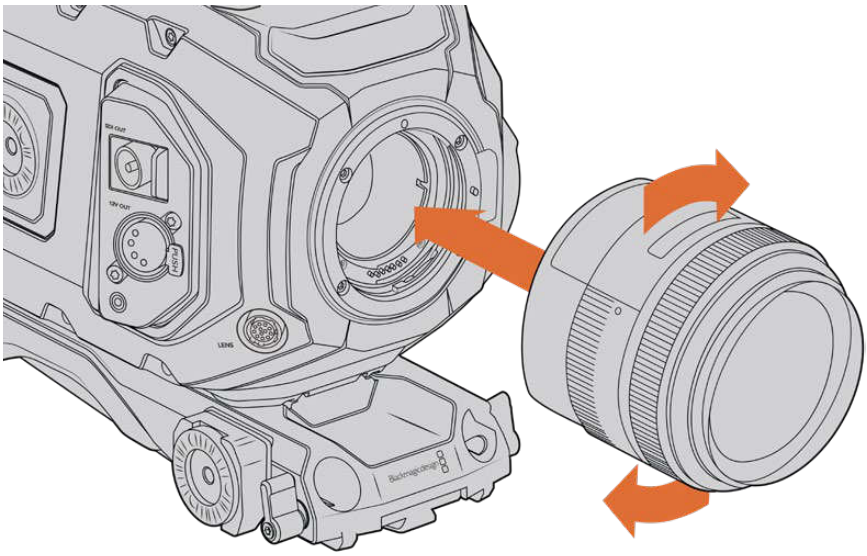

Attaching and removing an EF mount lens

Blackmagic URSA Mini Pro F Mount

With the Blackmagic URSA Mini Pro F Mount attached to your URSA Broadcast G2, you can use F mount lenses. Nikon's F mount system stretches back to 1959, and F mount lenses are still made today. This means that with the Blackmagic URSA Mini Pro F mount, you have access to a huge range of vintage and contemporary lenses.

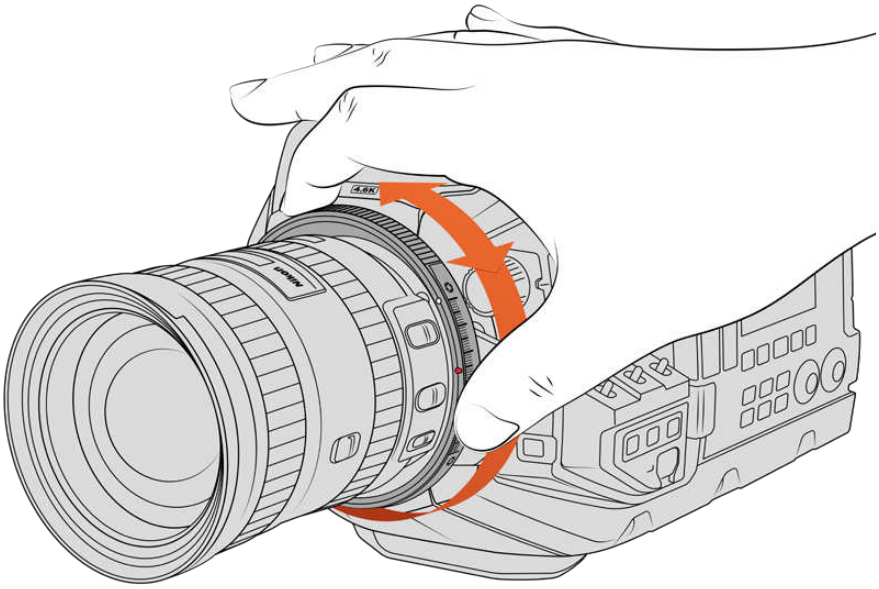

Use URSA Mini Pro F mount's iris adjustment ring to smoothly change the aperture of F mount lenses.

It's worth noting that the F mount is a mechanical mount. This means it does not offer electronic focus or iris control. Instead, the F mount features a mechanical iris adjuster. This moves the iris pin present in most Nikon lenses to achieve smooth cine style iris adjustment.

With an F mount mounted, simply move the iris adjuster on Blackmagic URSA Mini Pro F mount to achieve your preferred exposure. The red dot on the F mount and the markings on the iris adjuster let you mark iris settings to easily return to particular exposure or depth of field settings.

NOTE When removing the F mount, simply follow the instructions in reverse order from step 4 to step 1.

Nikon AF-D lenses

When using Nikon AF-D series lenses, it is necessary to lock your lens aperture to its smallest setting, such as f/22, to use the full range of Blackmagic URSA Mini Pro F mount's iris adjustment ring.

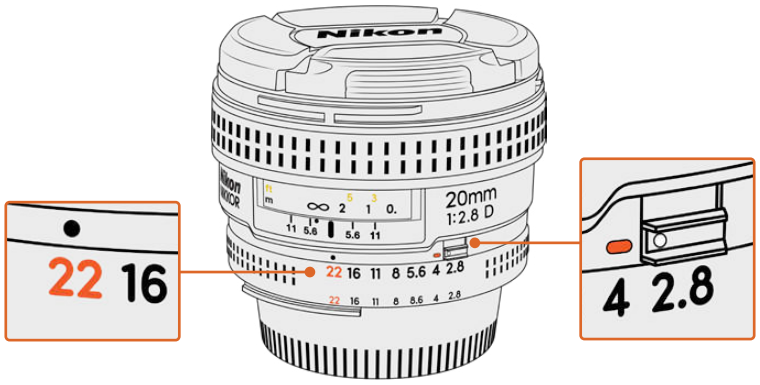

Setting and locking AF-D lenses to their smallest aperture is easiest before mounting to your camera.

The F mount kit includes:

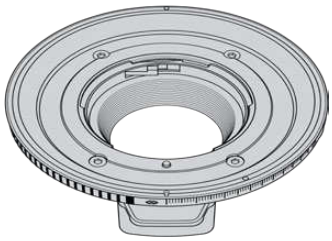

1x F mount

The F mount lets you attach common F stills lenses.

1 x Shim set

The shim set includes the following thicknesses:

0.50mm	0.18mm	0.10mm
0.30mm	0.15mm	0.05mm
0.20mm	0.12mm	0.025mm

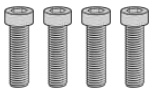

4 x 2mm Hex M3 x 18mm mount screws

The four M3 x 18mm Hex screws are used in the EF and F mount so it is best to keep the screws together with the respective mount.

The F mount kit also comes with a full spare sets of screws in case the originals are misplaced.

Tools Required

When attaching the F mount, you will need a 2mm Hex driver. While it's not absolutely required, we recommend using a torque wrench able to accurately set a maximum torque of 0.45Nm to reduce the potential of over tightening the screws.

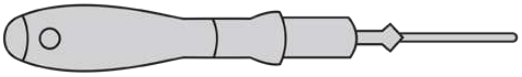

2mm Hex driver

Attaching the F Mount

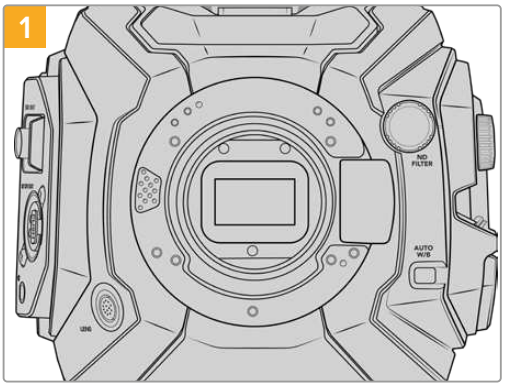

Place Blackmagic URSA Broadcast G2 vertically on a solid, clean bench top to ensure the mount can be attached vertically. If changing from the PL to the F mount, ensure that you have removed the PL baffle before inserting the F mount.

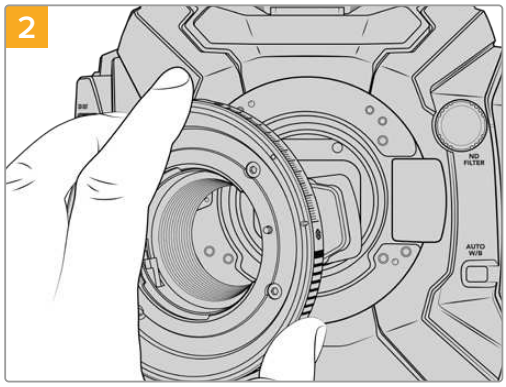

Carefully place the Blackmagic URSA Mini Pro F mount onto the camera body ensuring the white dot is at the 2 o'clock position.

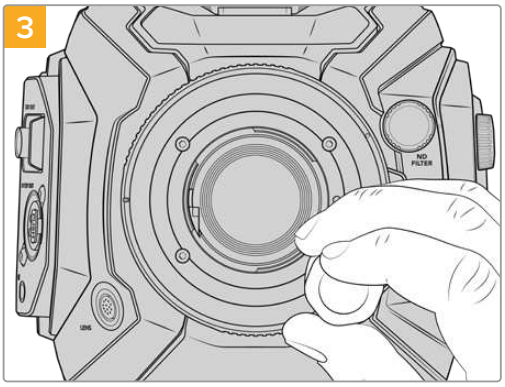

Loosely turn the four mounting screws until initial contact is made with the shoulder of the lens mount.

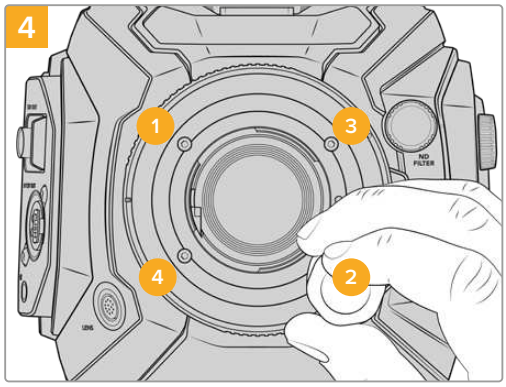

Using the 2mm Hex driver, or torque wrench with 2mm Hex key, apply one full turn of pressure to mounting screw 1, followed by one full turn to screw 2, and repeat for screw 3 and then 4. Continue to apply one full turn to each screw in the sequence above until all screws have reached the maximum torque of 0.45Nm.

NOTE Because of the way URSA Mini Pro F mount works, a small number of F mount lenses are not compatible.

These are Nikkor AF-S E series lenses, which do not offer mechanical iris control, and Nikon PC-E tilt-shift lenses like the 24mm f/3.5D PC-E and 85mm PC-E.

To attach a F mount lens:

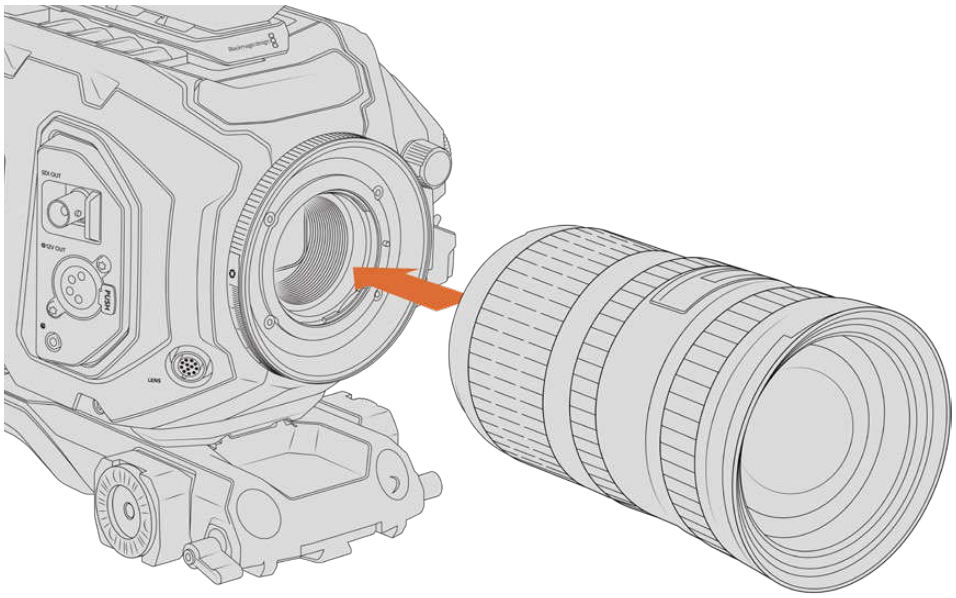

Attaching and removing a F mount lens on Blackmagic URSA Broadcast G2 with the optional F mount fitted

1. Align the dot on your lens with the dot on the camera mount. Many lenses have a visual indicator, for example a blue, red or white dot.
2. Insert the lens into the mount and twist counterclockwise until it locks into place.
3. To remove the lens, hold down the locking button, rotate the lens clockwise until its dot or indicator reaches the 2 o'clock position, and gently remove.

NOTE Blackmagic URSA Mini Pro F mount features a mechanical iris adjuster. To use older style F mount lenses with built in focus rings with this mount, your lenses aperture will need to be set and locked to its smallest setting, such as f/22.

Blackmagic URSA Mini Pro PL Mount

Attaching the PL mount to your URSA Broadcast G2 lets you use high end precision cinema lenses and Super 16mm PL lenses for feature film and television production.

The PL mount kit includes:

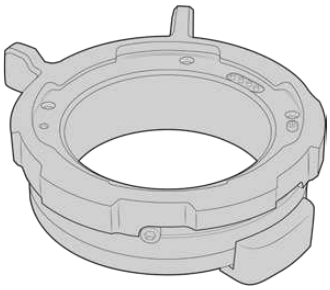

1x PL mount

The PL mount is shipped with a protective dust cap.

1 x Shim set

The shim set includes the following thicknesses:

0.50mm	0.18mm	0.10mm
0.30mm	0.15mm	0.05mm
0.20mm	0.12mm	0.025mm

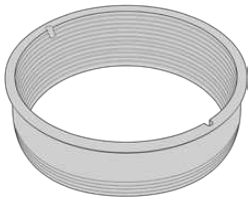

1x PL baffle

The PL mount baffle helps to control and direct the light entering the sensor.

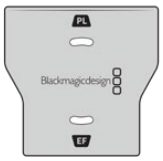

1x Baffle tool

Use the PL baffle tool to tighten the baffle in your camera.

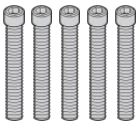

5 x 2mm Hex M2.5 x 22mm mount screws

The five M2.5 x 22mm Hex screws are exclusive to the PL mount so you can keep the screws together with the respective mount.

Tools Required

When attaching the PL mount, you will need a 2mm Hex driver. While it's not absolutely required, we recommend using a torque wrench able to accurately set a maximum torque of 0.45Nm to reduce the potential of over tightening the screws.

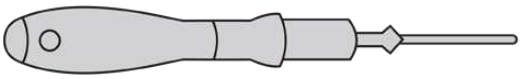

2mm Hex driver

Attaching the PL Mount

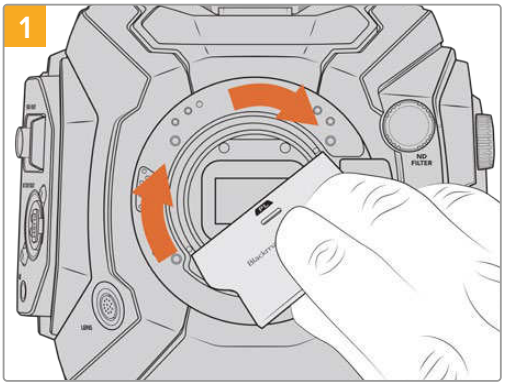

Gently insert the PL baffle into the center of the lens mount and turn until it is finger tight. Use the wide end of the baffle tool to tighten the baffle slightly. You need just enough pressure to keep it in place.

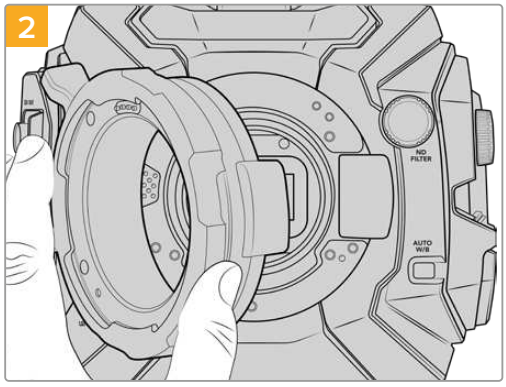

Ensure the pins on the PL mount for Cooke /i Technology are located at the 12 o'clock position.

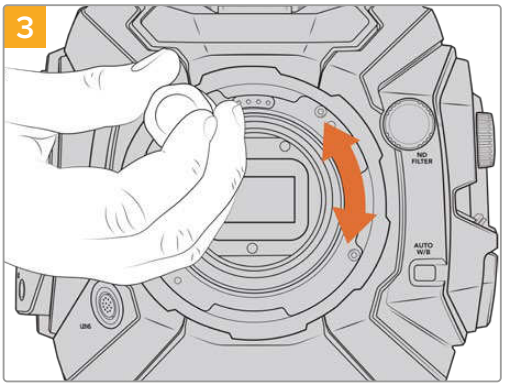

Loosely turn the five mounting screws until initial contact is made with the shoulder of the lens mount. To access all five screws, you will need to rotate the PL locking ring, as some holes are obscured when the ring is either open or closed.

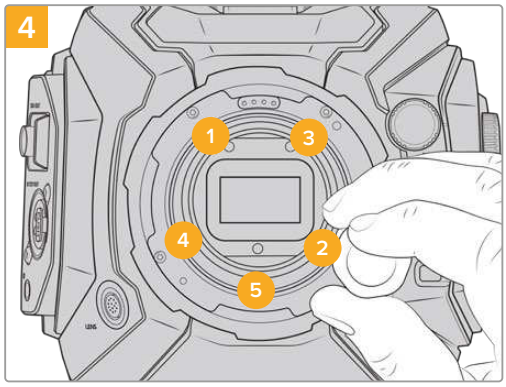

Using the 2mm Hex driver, or torque wrench with 2mm Hex key, apply one full turn of pressure to mounting screw 1, followed by one full turn to screw 2. Repeat for screws 3 and 4, then 5. Continue to apply one full turn to each screw in the sequence above until all screws have reached the maximum torque of 0.45Nm.

NOTE When removing the PL mount, simply follow the instructions in reverse order from step 4 to step 1. Don't forget to remove the PL baffle and store it securely with the PL mount.

To attach a PL mount lens:

1. Open your camera's PL locking ring by rotating it counterclockwise until it stops.
2. Align one of the lens' four flange notches with the locating pin on the camera mount. Be sure to align the lens for easy viewing of the lens marks.
3. Tighten the PL locking ring by rotating it clockwise. If attaching a PL lens with a servo unit to URSA Broadcast G2, you can also connect the 12 pin broadcast connector for servo control.

4 To remove the lens, rotate the locking ring counterclockwise until it stops, then gently remove the lens by pulling it directly out from the camera body. There is no need to rotate the lens.

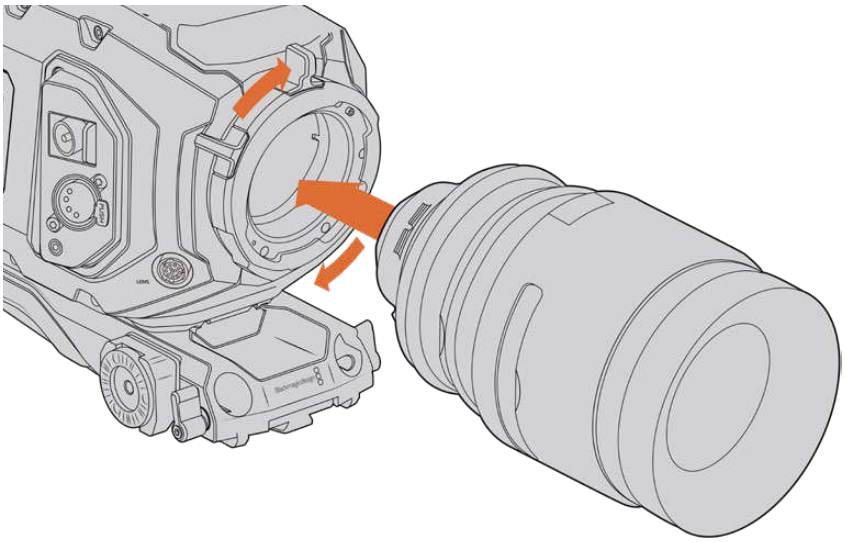

Attaching and removing a PL lens

Cooke Lenses /i Technology Support

The optional Blackmagic URSA Mini Pro PL Mount available for URSA Broadcast G2 features four pins at the 12 o'clock position that are used to communicate with lenses featuring Cooke's /i Technology interface. The lenses that support this interface include lenses from Canon, Cooke, Fujinon, Leica and Zeiss. This lets you record lens information in your clips' metadata such as the lens model, focal length, aperture setting, focus distance and other lens specific information.

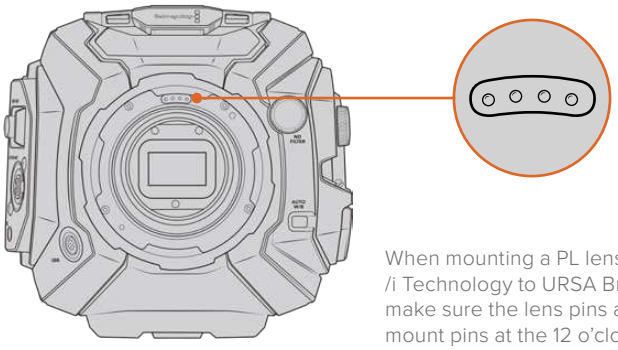

When mounting a PL lens with Cooke /i Technology to URSA Broadcast G2, make sure the lens pins align with the mount pins at the 12 o'clock position

The information that is recorded as metadata via Cooke's /i Technology interface can be very helpful in post production and VFX. Knowing the lenses used in production and their precise settings can be helpful in the event that the setup needs to be replicated at a later date.

This detailed information can also be utilized by powerful applications such as DaVinci Resolve and Blackmagic Fusion for a wide variety of advanced functions. For example, the recorded metadata can be used to simulate the specific lens in 3D space, or correct lens distortions.

PL Mount Servo Lenses

URSA Broadcast G2 supports control of PL 35mm lenses with servo handgrips. When the lens is plugged in to the lens connector on the camera, URSA Broadcast G2 will provide power and control signals to your lens in the same way it does with B4 lenses. For more information refer to the 'Using Servo Zoom Lenses' section in this manual.

Blackmagic URSA Broadcast G2 B4 Mount

The Broadcast B4 mount is the mount that your URSA Broadcast G2 camera originally ships with. If you have removed the mount to fit the included Blackmagic URSA EF mount or optional URSA PL or F mount, follow these instructions to reattach your B4 mount.

Tools Required

When attaching the B4 mount, you will need a 2mm Hex driver. While it's not absolutely required, we recommend using a torque wrench able to accurately set a maximum torque of 0.45Nm to reduce the potential of over tightening the screws.

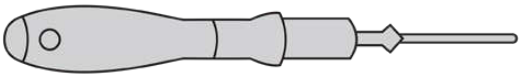

2mm Hex driver

Attaching the B4 Lens Mount

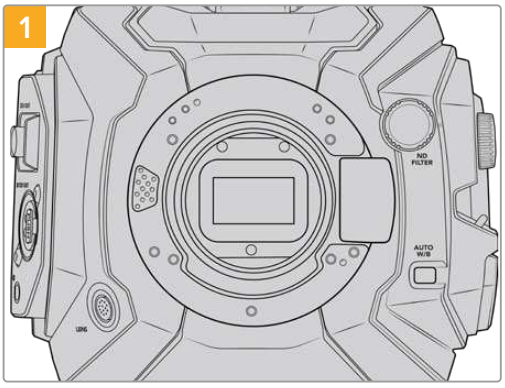

Place Blackmagic URSA Broadcast G2 vertically on a solid, clean bench top to ensure that the mount can be inserted vertically.

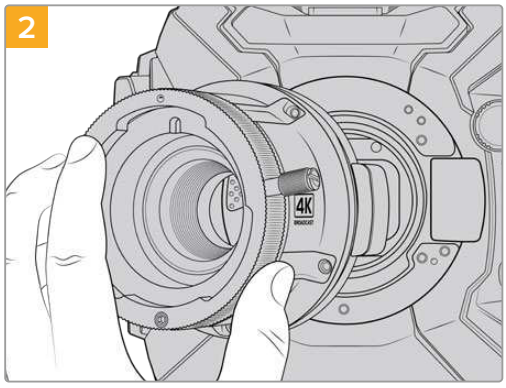

Keeping the original .50mm shim in place, gently put the Blackmagic URSA Broadcast G2 B4 mount onto the camera body ensuring the red dot is at the 12 o'clock position.

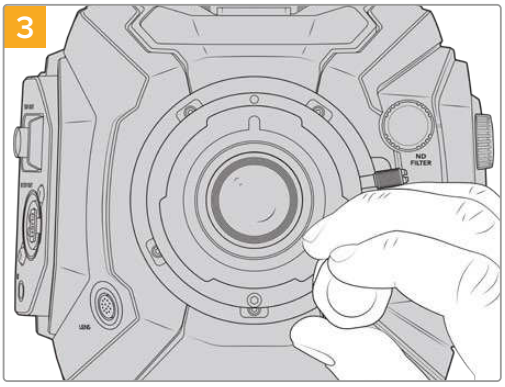

Loosely turn the five mounting screws until initial contact is made with the shoulder of the lens mount.

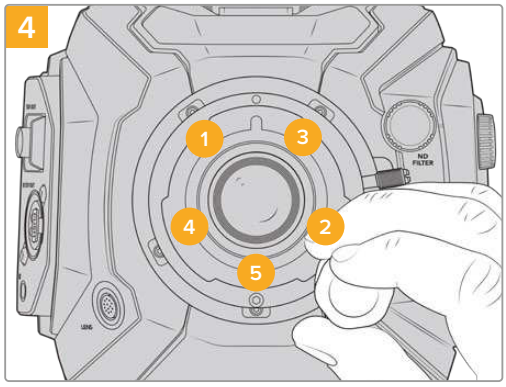

Using the 2mm Hex driver, or torque wrench with 2mm Hex key, apply one full turn of pressure to mounting screw 1, followed by one full turn to screw 2. Repeat for screws 3 and 4, then 5. Continue to apply one full turn to each screw in the sequence above until all screws have reached the maximum torque of 0.45Nm.

NOTE When removing the B4 mount, simply follow the instructions in reverse order from step 4 to step 1.

Shimming Lens Mounts

What is a Shim?

Shims are thin disks of varying thickness that let you make fine adjustments to the distance between your lens and URSA Broadcast G2's sensor. This distance is commonly known as the flange focal distance, and can change slightly due to variables such as lens age and the environmental conditions of your shoot.

URSA Broadcast G2 Shim

Shims are placed between the lens mount and the camera body so the distance from your subject to the sensor matches the focus marks on your lens. These are most commonly used for PL lenses. These cine lenses are manually focused and have very accurate focal distance markings on their barrels. Shims are also used for URSA Broadcast G2's interchangeable lens mount.

The Blackmagic URSA Mini Pro Shim Kit contains additional shim sets of various thicknesses, and can be purchased from your local Blackmagic Design reseller. A set of shims is also included with all mount kits and are compatible with URSA Broadcast G2. Use shim thicknesses depending on your back focus requirements.

Blackmagic URSA Mini Pro Shim Kit

Your URSA Broadcast G2 camera ships with two shims, a 0.10mm plastic shim and a 0.50mm metal shim. These shims set the proper focal distance for your URSA Broadcast G2 camera's B4, EF, and F mount lenses. Very occasionally, you will need to use additional shims to suit PL lenses that require very specific clearances to maintain accurate focus marks. Blackmagic URSA Mini Pro Shim Kit includes the following additional tools. Other thicknesses are included in the kit in case you need to re-shim your camera to suit PL lenses that may require slightly different clearances to maintain accurate focus marks.

The shim kit includes:

1x Baffle tool

Use the baffle tool to loosen or tighten the PL baffle when removing or attaching the PL mount to your URSA Broadcast G2.

1 x Shim set

The shim set includes the following thicknesses:

0.50mm	0.18mm	0.10mm
0.30mm	0.15mm	0.05mm
0.20mm	0.12mm	0.025mm

Shimming mounts

To shim your camera's mounts you'll need a torque wrench able to accurately set a maximum torque of 0.45Nm, with a 2.0mm Hex key and driver.

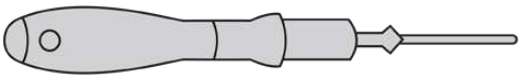

Torque wrench

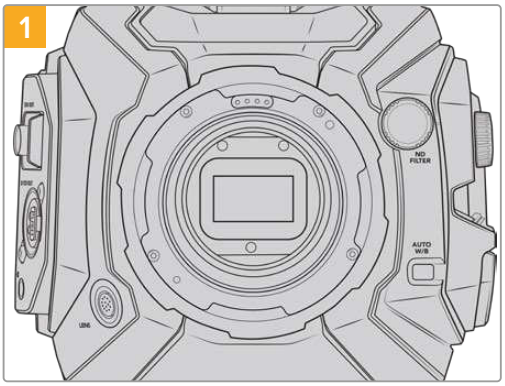

Place URSA Broadcast G2 vertically on a solid, clean bench top and remove your lens or dust cap.
The filter covering the sensor will be exposed for the duration of the shimming process, so it's important to keep the filter as clean as possible. Be careful not to touch the filter while shimming mounts.

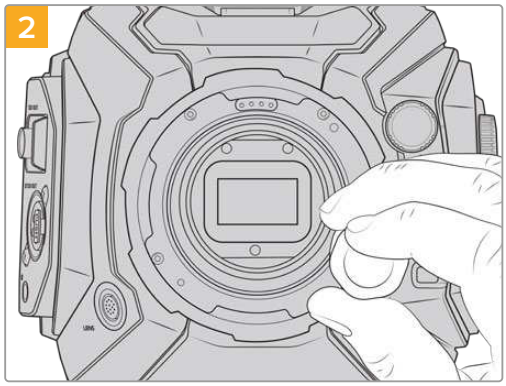

Remove the screws holding your mount in place using a 2.0mm Hex driver. For more information on removing particular mounts, see the 'interchangeable lens mount' section in this manual.

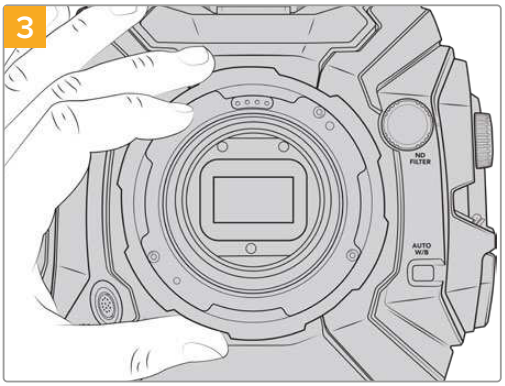

Carefully lift the lens mount away from the camera body. Keep the screws safely located close to the lens mount.

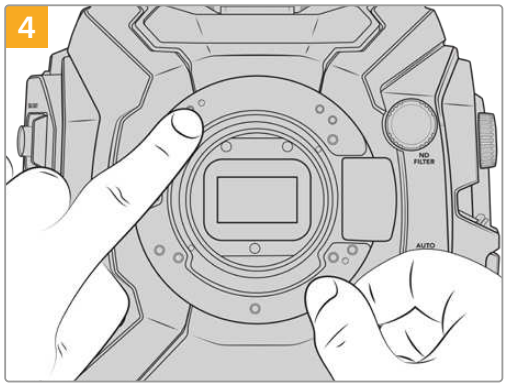

Note the alignment of the existing shim with the alignment pin at the 11 o'clock position.

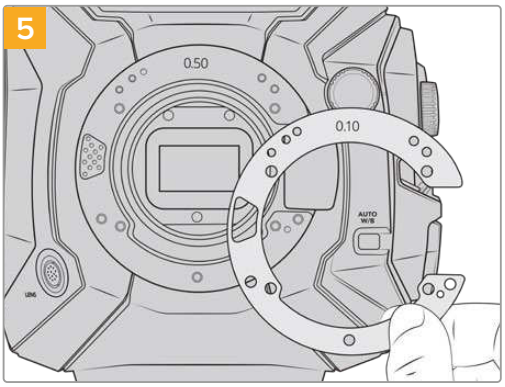

Add or remove shims to slightly change the depth of your mount. It is a good idea to start with a small shim thickness such as a 0.10mm.

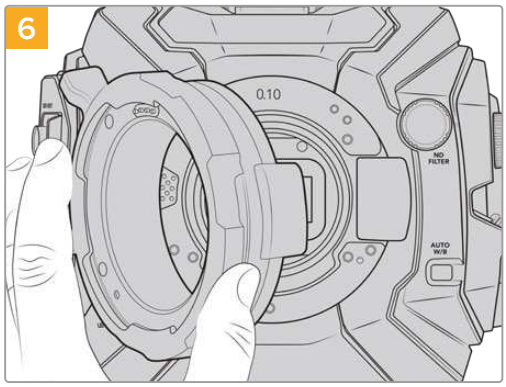

Place your lens mount onto the camera body, tighten screws and remount your lens and check if your lens focus marks are now in alignment with the focal distance. If not then continue steps 1 to 6, adjusting shimming a small amount at a time until your lens is hitting hits marks.

URSA Mini Recorder

Blackmagic URSA Mini Recorder is an optional module which attaches to the rear of URSA Broadcast G2. This recorder allows you to record footage, including 6K Blackmagic RAW files, to high capacity and inexpensive solid state drives, or 'SSDs'.

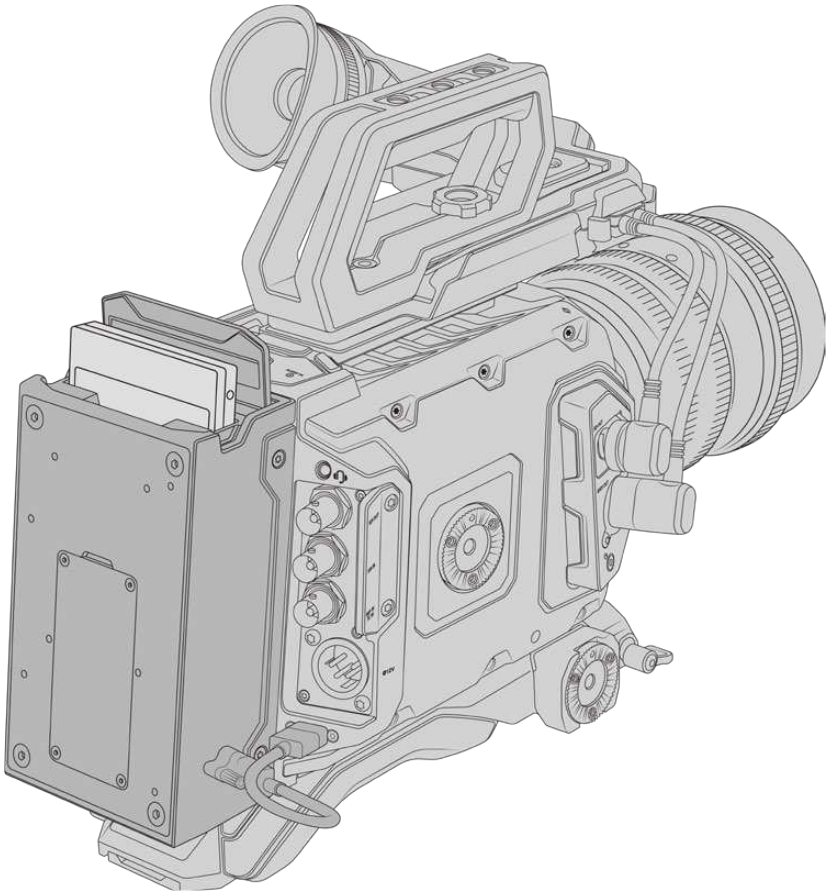

When attaching URSA Mini Recorder, you will need the following tools:

- 1 x phillips head screwdriver
- 1 x T10 torx screwdriver
- 1 x 2mm hex key driver

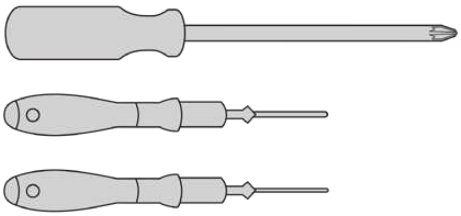

To attach the URSA Mini Recorder to your URSA Mini you will need a large phillips head screwdriver, a T10 torx driver, and a 2mm hex key driver

Mounting and connecting URSA Mini Recorder

URSA Mini Recorder mounts to the back of URSA Broadcast G2 directly behind the camera body, using your camera's rear USB-C data port to pass data to and from URSA Mini Recorder.

TIP URSA Mini Recorder features a passthrough cable for your camera's battery power supply, so you can attach V-mount or gold mount batteries to the rear of the camera behind the recorder.

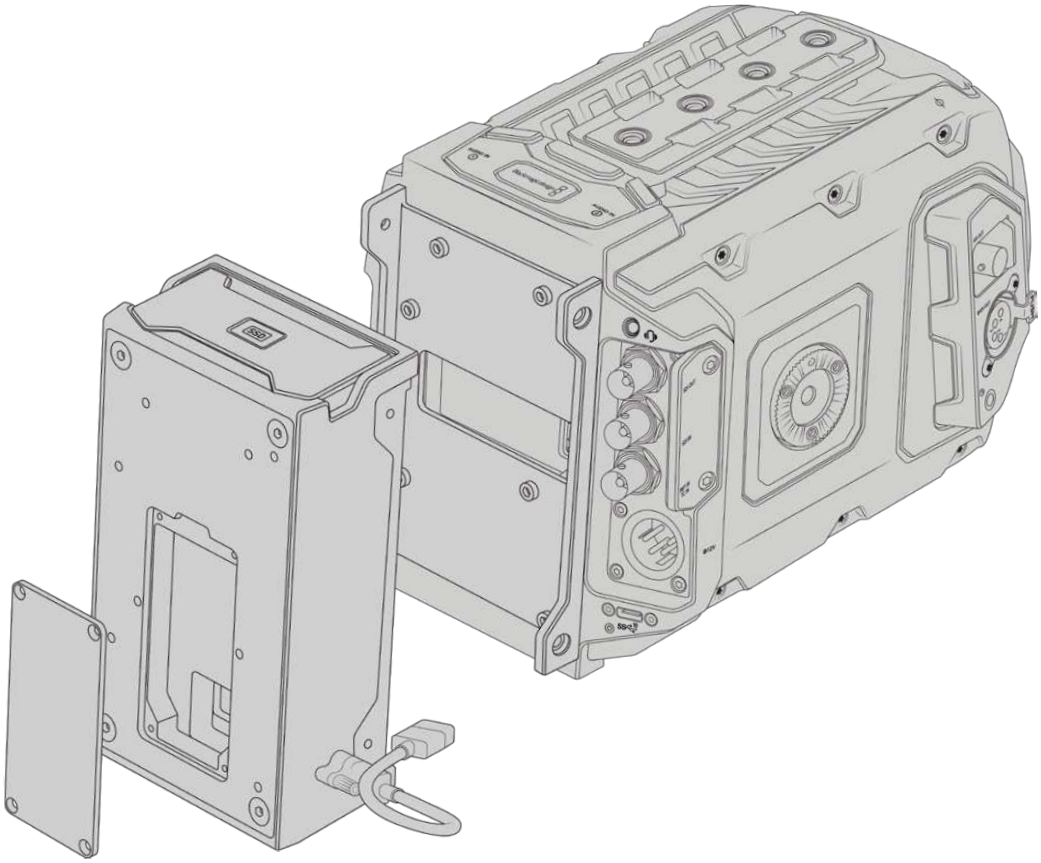

To mount and connect URSA Mini Recorder:

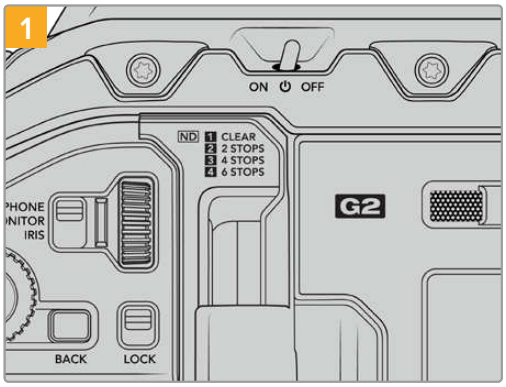

Power off URSA Broadcast G2 by moving the 'power' switch to 'off'.

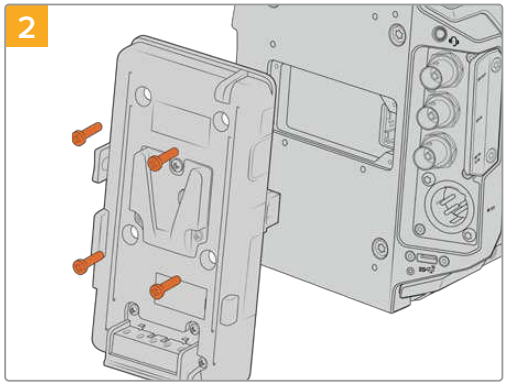

Unmount any battery plates currently fitted to your camera. For more information on mounting and unmounting battery plates, see the section 'mounting batteries' in this manual.

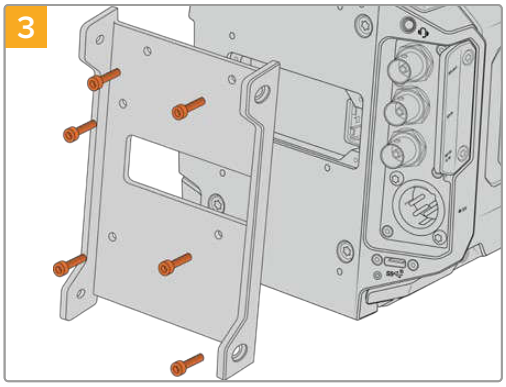

Attach URSA Mini Recorder's mounting bracket using 6 x T10 torx screws.

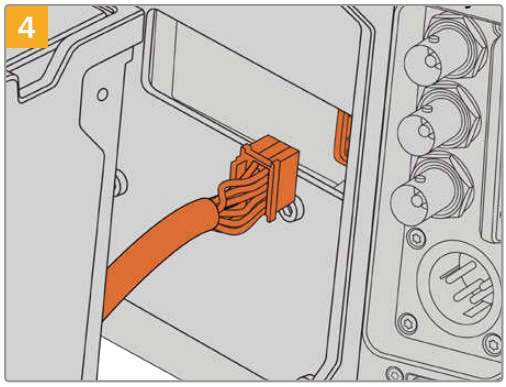

Plug the molex connector on URSA Mini Recorder into the molex socket on your camera's rear panel.

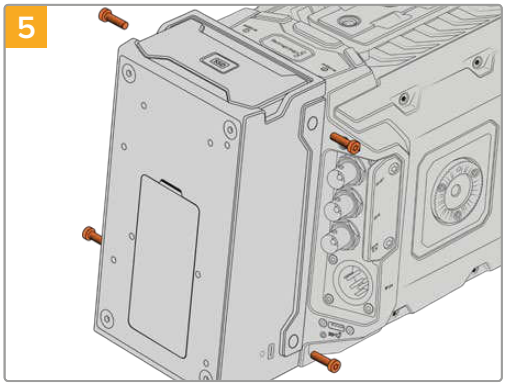

Attach URSA Mini Recorder to the mounting bracket using 2 x T10 torx screws on the left and right side of the brackets.

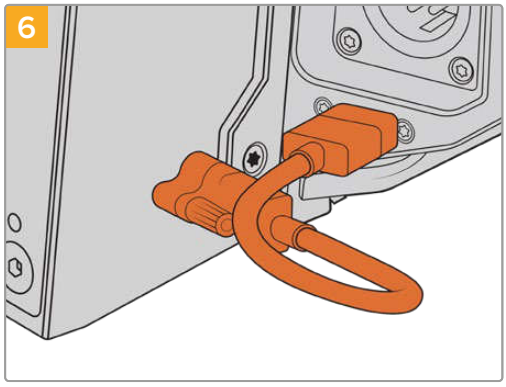

Connect the Mini Recorder's USB-C cable to the USB-C data port on the rear of URSA Broadcast G2. Tighten the locking connectors with your fingers, or use a 2mm hex key driver.

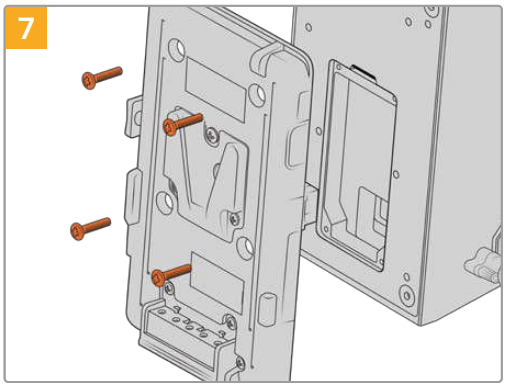

If you want to use a battery plate with URSA Mini Recorder, use a 2mm hex key driver to remove the four M3 screws holding the molex socket cover panel in place. Once the molex socket is uncovered, attach a battery plate using the steps outlined in the section 'mounting batteries' in this manual.

Using URSA Mini Recorder

When URSA Mini Recorder is connected and an SSD is loaded, the recorder occupies slot 3 in URSA Broadcast G2's operating system. You'll see an 'SSD' indicator over slot 3 on your camera's storage manager when URSA Mini Recorder is in use.

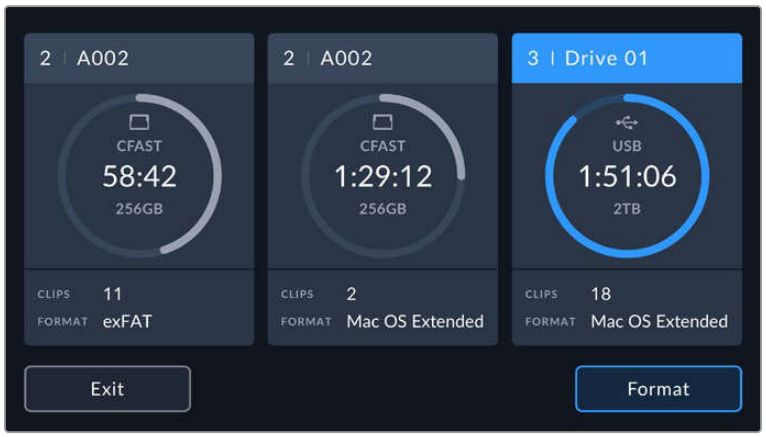

This means that recording, playback and storage management is exactly the same for SSDs as it is for CFast or SD cards. For general information on storage management, as well as specific instructions for choosing SSDs, see the 'storage media' section of this manual.

Status LEDs

URSA Mini Recorder has one status light on the left side for 'SSD.' The brightness of this indicator can be set to 'low,' 'medium,' 'high' or 'off' in your camera's 'setup' menu.

SSD

The 'SSD' indicator shows the status of the SSD currently inserted. This LED provides the following status indicators:

White	Your URSA Mini Recorder will show a solid white light when powered on and communicating with your URSA Broadcast G2.
Red	Your URSA Mini Recorder will show a red light while it is recording to SSD. When the space on your SSD is running low the red light will begin to flash slowly. A fast flashing red light indicates that SSD is dropping frames. If this happens please check that you are using a disk from our recommended list of SSDs and that you are recording at a data rate that is compatible with your media.
Orange	If a problem has occurred while mounting the SSD the status light will go Orange. This may be the result of an improperly formatted or incompatible SSD. See the 'storage media' section in this manual for a list of compatible SSDs and formatting instructions.

TIP If the 'SSD' LED indicates a drive mounting error it may need to be 'initialized' on a mac or PC using disk utility or disk management.

Updating URSA Mini Recorder's internal software

Update your URSA Mini Recorder using the Blackmagic Camera Setup Utility software. The Mini Recorder will need to be powered when updating, so we recommend keeping the Mini Recorder connected to URSA Broadcast G2 during the update process. This also means your camera will need to supply consistent power, so be sure to plug into external power or battery pack.

Connect your computer to the Mini Recorder with a USB-C cable and launch Blackmagic Camera Setup Utility. You will be prompted to update if your computer detects that your URSA Mini Recorder is using outdated version. Follow the on screen prompts to update your URSA Mini Recorder's internal software. Refer to the 'Blackmagic Camera Setup Utility' section in this manual for more information.

TIP We recommend updating all your Blackmagic URSA equipment at the same time for optimized performance.

Understanding Studio Camera Control

Blackmagic URSA Broadcast G2 can be used as a studio camera and controlled from an ATEM switcher using the Camera Control feature in ATEM Software Control. This lets you add a camera with large sensor picture quality and amazing dynamic range to your broadcast studio and control it just as you would any studio camera.

Clicking on the 'camera' button opens the camera control feature. Settings such as iris, gain, focus and zoom control are easily adjusted using compatible lenses, plus you can color balance cameras and create unique looks using the DaVinci Resolve primary color corrector.

The ATEM switcher control works by broadcasting camera control packets via all the non down converted SDI outputs of an ATEM switcher. So this means you can connect an SDI output of an ATEM switcher to URSA Broadcast G2's 12G SDI input, your camera will detect the control packets in the SDI link and allow you to control features in the camera itself.

ATEM Camera Control

NOTE When using Blackmagic URSA Broadcast G2 with your ATEM switcher, we recommend updating the internal software to the latest version on both units to ensure compatibility. The latest software can be found at the Blackmagic Design support center at www.blackmagicdesign.com/support.

Connecting your URSA Broadcast G2

1. Connect your Blackmagic URSA Broadcast G2's 12G-SDI Out to any SDI In on the ATEM switcher.
2. Connect any one of the ATEM switcher's SDI outputs, except down converted or multi view outputs, to your URSA Broadcast G2's 12G-SDI input. Camera control signals are not sent via the multi view and down converted SDI outputs.

3 On your URSA Broadcast G2, navigate to 'ATEM Camera ID' in the 'setup' menu and set your camera's ATEM ID to match the switcher input. For example, if URSA Broadcast G2 1 is connected to Cam 1 on the ATEM switcher, the camera number must also be set to 1. This ensures tally is sent to the correct camera.

4 In the 'setup' menu select your 'reference source'. Unless you have a genlock signal being sent to all of your cameras and your switcher, we recommend setting 'reference source' to 'program' when attached to ATEM.

5 Navigate to the 'monitor' menu and ensure that you have selected 'clean feed' for 'main SDI' to ensure that you don't see overlays or the focus box on the SDI output to the ATEM switcher.

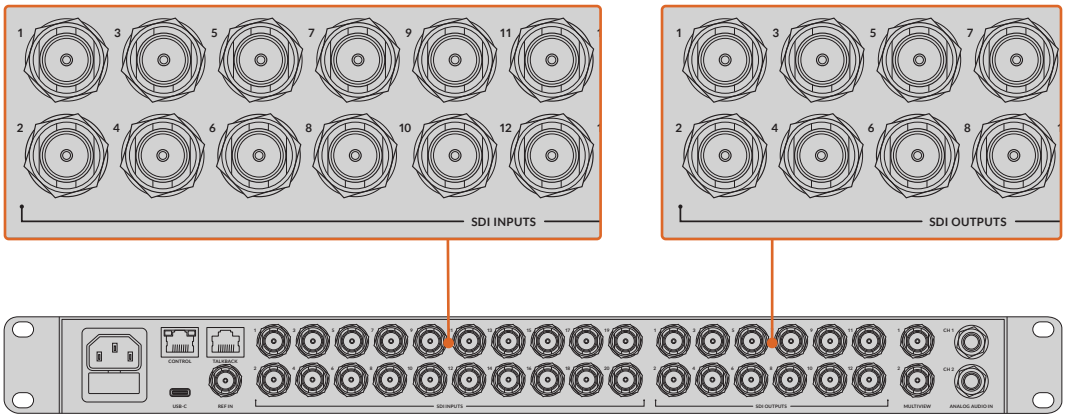

Connect your URSA Broadcast G2 to any of the ATEM switcher's SDI inputs

Using Camera Control

Launch ATEM Software Control and click on the 'camera' button located at the bottom of the software window. You'll see a row of labeled camera controllers containing tools to adjust and refine each camera's image. The controllers are easy to use. Simply click the buttons using your mouse, or click and drag to adjust.

Camera Control Selection

The button row at the top of the camera control page lets you select the camera number you would like to control. If you have more cameras that fit onto the window size, or you are running the color corrector window, then you can use these buttons to select between which camera you would like to control. If you are using an Aux output for monitoring your camera control, pushing these buttons to change the camera to control will also send that camera's video output to the Aux output setup in the switcher preferences.

Click on the settings icon to select the Aux output for camera control

Channel Status

The channel status at the top of each camera controller displays the camera label, On Air indicator and lock button. Press the lock button to lock all the controls for a specific camera. When on air, the channel status illuminates red and displays the On Air alert.

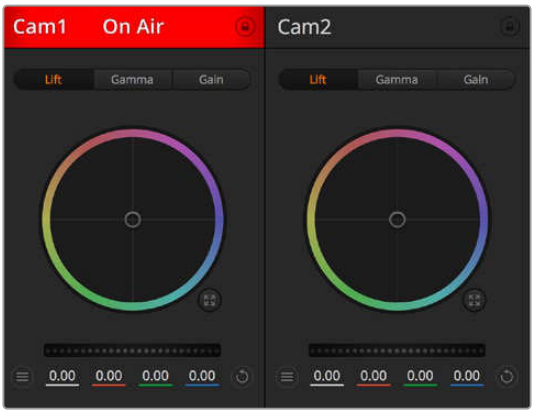

Each camera controller displays the channel status so you know which camera is on air. Use the color wheels to adjust each YRGB channel's lift, gamma and gain settings

Color Wheel

The color wheel is a powerful feature of the DaVinci Resolve color corrector and used to make color adjustments to each YRGB channel's lift, gamma and gain settings. You can select which setting to adjust by clicking on the three selection buttons above the color wheel.

Master Wheel

Use the master wheel below the color wheel to make contrast adjustments to all YRGB channels at once, or luminance only for each lift, gamma or gain setting.

Reset Buttons

The reset button near the top right of each camera controller lets you easily choose color correction settings to reset, copy or paste. Each color wheel also has its own reset button. Press to restore a setting to its default state, or copy/paste a setting. Locked controllers are not affected by the Paste feature.

The master reset button on the top right corner of the color corrector panel lets you reset lift, gamma and gain color wheels plus Contrast, Hue, Saturation and Lum Mix settings. You can paste color correction settings to camera controllers individually, or all cameras at once for a unified look. Iris, focus, coarse and pedestal settings are not affected by the Paste feature. When applying Paste to all, a warning message will appear asking you to confirm your action. This is so you don't accidentally paste new settings to any unlocked cameras that are currently on air.

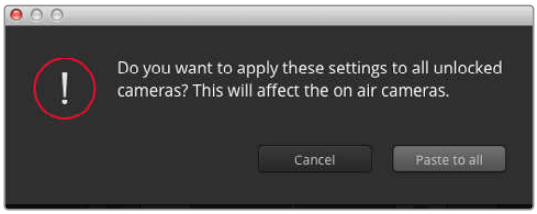

When applying Paste to all, a warning message will appear asking you to confirm your action. This is so you don't accidentally paste new settings to any unlocked cameras that are currently on air

Iris/Pedestal Control

The iris/pedestal control is located within the cross hairs of each camera controller. The control illuminates red when its camera is on air.

To open or close the iris, drag the control up or down. Holding the shift key allows only iris adjustments.

> **NOTE** When connected to ATEM ensure that you have Auto Exposure switched off. If you require Iris, zoom or focus control ensure that you have a lens that can be controlled electronically by the camera.

If you're using a B4 or PL lens connected via the broadcast 12 pin connector on URSA Broadcast G2, make sure the lens iris switch on the handgrip is set to 'A' or 'auto'.

To darken or lift the pedestal, drag the control left or right. Holding the command key on a Mac, or the Control key on Windows, allows only pedestal adjustments.

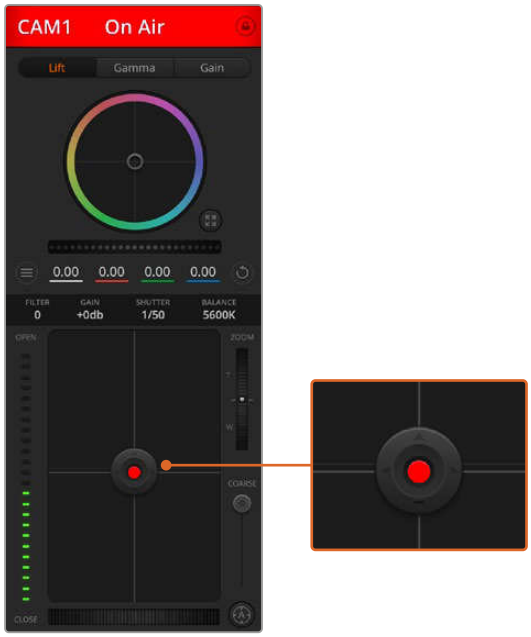

The iris/pedestal control illuminates red when its respective camera is on air

Zoom Control

When using compatible lenses with an electronic zoom feature, you can zoom your lens in and out using the zoom control. The controller works just like the zoom rocker on a lens, with telephoto on one end, and wide angle on the other. Click on the zoom control, located above the coarse slider, and drag up to zoom in, or drag down to zoom out.

If your lens does not have active lens control or your camera does not support zoom control via the SDI camera control protocol then these settings will have no effect. For example, EF lenses do not have built in servos that can zoom the lens electronically so will not be zoomable with ATEM camera control.

> **NOTE** Analogue B4 lenses do not support ATEM zoom control. For more information on analogue B4 lenses refer to the 'using servo zoom lenses' section

Coarse Setting

The coarse setting is located to the left of the iris/pedestal control and is used to limit the iris range. This feature helps you prevent over exposed images from going to air.

To set your coarse threshold, completely open the iris using the iris control, then drag the coarse setting up or down to set optimum exposure. Now when you adjust the iris, the coarse threshold will prevent it from going above optimum exposure.

Iris Indicator

The iris indicator is located to the left of the iris/pedestal control and displays a visual reference so you can easily see how open or closed the lens aperture is. The iris indicator is affected by the coarse setting.

Auto Focus Button

The auto focus button is located at the bottom left corner of each camera controller. Press to automatically set the focus when you have an active lens that supports electronic focus adjustments. It's important to know that while most lenses support electronic focus, some lenses can be set to manual or auto focus modes, and so you need to ensure your lens is set to auto focus mode. Sometimes this is set by sliding the focus ring on the lens forward or backward. On B4 lenses with servo zoom control, you will need to set the switch at the bottom of the handgrip to 'servo'.

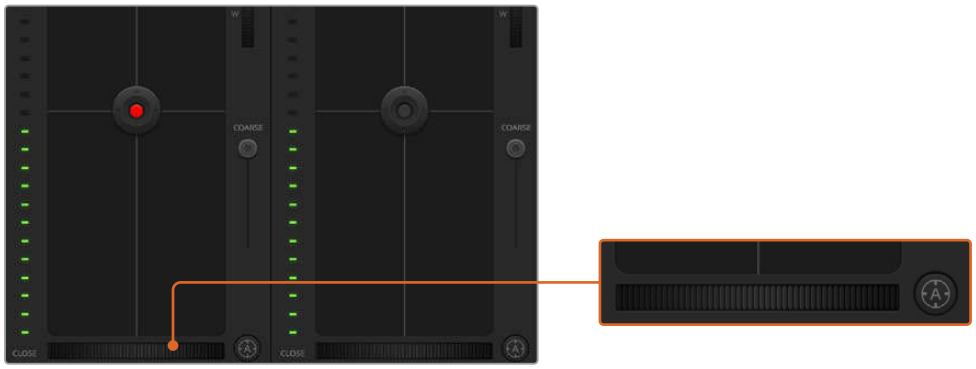

Click on the auto focus button or drag the manual focus adjustment left or right to focus a compatible lens

Manual Focus Adjustment

When you want to manually focus your lens using ATEM Camera Control, you can use the focus adjustment located at the bottom of each camera controller. Drag the wheel control left or right to manually adjust focus while viewing the video feed from the camera to ensure your image is nice and sharp.

Manual focus control is only available from your switcher when using B4 and PL lenses with servo focus controls. As EF lenses do not have servo focus this option is not available when using EF lenses.

Camera Gain

When operating in varying light conditions, you might want to increase or decrease your camera's gain to avoid under exposing your images. To do this click the left arrow to decrease gain and the right arrow to increase gain.

Your ATEM switcher will display gain in dB. This corresponds to the gain settings on your camera in the following way:

Gain
-6
0
+6
+12
+18

The gain settings are displayed using dB indicators

Shutter Speed Control

Shutter speed control is used to change your URSA Broadcast G2's shutter speed.

The shutter speed control is located between the color wheel and the iris/pedestal control. Decrease or increase the shutter speed by hovering your mouse pointer over the shutter speed indicator and clicking the left or right arrow.

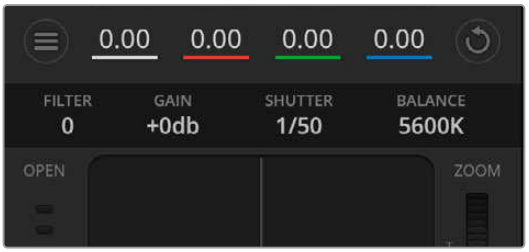

Hovering your mouse pointer over the gain, shutter speed and white balance indicators reveal arrows you can click on to adjust their respective settings

NOTE As ATEM shutter speed control takes priority over the shutter speed selected on your URSA Broadcast G2, your camera's shutter speed controls are disabled when connected to an ATEM switcher.

The table below shows the available shutter speeds in shutter speed control and their equivalent shutter angles. It's worth noting that some shutter speeds fall outside of URSA Broadcast G2's minimum and maximum shutter angles of 11.25 and 360 degrees, respectively. If this happens, the closest available shutter angle is used.

When your URSA Broadcast G2 is connected to an ATEM switcher, the shutter speed setting is also be visible in your camera's touchscreen status display. It is visible in an URSA Viewfinder if attached.

Shutter Speed	Shutter Angle at 23.98 fps	Shutter Angle at 24 fps	Shutter Angle at 25 fps	Shutter Angle at 29.97 fps	Shutter Angle at 50 fps	Shutter Angle at 59.94 fps
1/50	172.7	172.8	180	215.8	360	360*
1/60	143.9	144	150	179.8	300	359.6
1/75	115.1	115.2	120	143.9	240	287.7
1/90	95.9	96	100	120	200	239.8
1/100	86.3	86.4	90	107.9	180	215.8
1/120	71.9	72	75	89.9	150	179.8
1/150	57.5	57.6	60	71.9	120	143.9
1/180	48	48	50	59.9	100	119.9
1/250	34.5	34.6	36	43.2	72	86.3
1/360	24	24	25	29.97	50	59.94
1/500	17.3	17.3	18	21.6	36	43.2
1/725	11.9	11.9	12.4	14.9	24.8	29.8
1/1450	11.25*	11.25*	11.25*	11.25*	12.4	14.9
1/2000	11.25*	11.25*	11.25*	11.25*	11.25*	11.25*

* Shutter speeds outside URSA Broadcast G2's shutter angle range use its closest available minimum or maximum shutter angle.

TIP Decreasing shutter speed is a good way to brighten your images without using camera gain because you are increasing the exposure time of the image sensor. This can also reduce or eliminate light flicker when shooting under fluorescent lights. Increasing shutter speed reduces motion blur and is best used for action shots when you want your images to be clean and sharp.

White Balance

The white balance setting next to the shutter speed control can be adjusted by clicking on the left or right arrows on each side of the color temperature indicator. Different light sources emit warm or cool colors, so you can compensate by adjusting the white balance. This ensures the whites in your image stay white.

DaVinci Resolve Primary Color Corrector

If you have a color correction background, then you can change the camera control from a switcher style CCU interface to a user interface that's more like a primary color corrector on a post production color grading system.

Your Blackmagic URSA Broadcast G2 features a DaVinci Resolve primary color corrector built in. If you have used DaVinci Resolve, then creatively, grading in your URSA Broadcast G2 will be identical so you can use your color grading experience for live production. The color corrector panel can be expanded out of any camera controller and provides expanded color correction control with extra settings and a full primary color corrector interface.

You have color wheels and settings such as saturation available and you can see shadows, mid tones and highlight settings all at the same time. Simply switch between cameras using the camera selection controls at the top of the window as you need.

TIP DaVinci Resolve color correction is applied to your URSA Broadcast G2's SDI output and ProRes video recorded on camera. As RAW video is intended for extensive post processing, color correction is not applied to RAW video. When recording RAW video, however, color correction can still be applied to URSA Broadcast G2's SDI output.

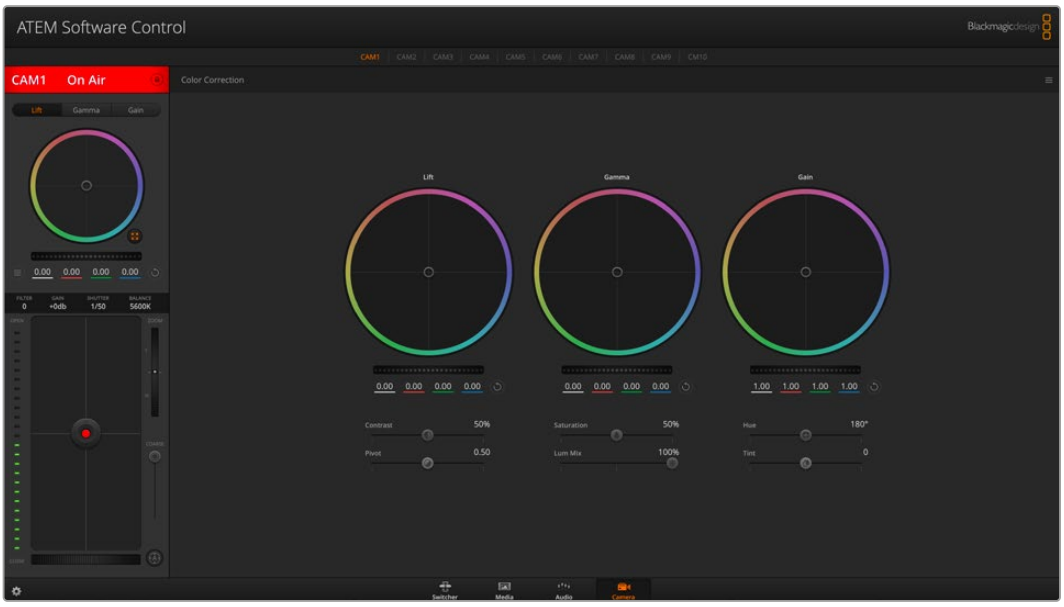

Click on the DaVinci Resolve primary color corrector button to expand the color correction window and adjust settings

Color Wheels

The Lift/Gamma/Gain controls allow tonally specific yet overlapping regions of adjustment. In photographic terms lift, gamma and gain corresponds to shadows, mid tones and highlights.

Use the color wheels in the following ways to make fine or aggressive adjustments:

- **Click and drag anywhere within the color ring:**
  Note that you don't need to drag the color balance indicator itself. As the color balance indicator moves, the RGB parameters underneath change to reflect the adjustments being made to each channel.
- **Shift-Click and drag within the color ring:**
  Jumps the color balance indicator to the absolute position of the pointer, letting you make faster and more extreme adjustments.
- **Double-click within the color ring:**
  Resets the color adjustment without resetting the master wheel adjustment for that control.

- **Click the reset control at the upper-right of a color ring:**
  Resets both the color balance control and its corresponding master wheel.

Lift, gamma and gain color wheels in the color corrector panel

Master Wheels

Use the master wheels below the color wheels to adjust each YRGB channels' lift, gamma and gain controls.

To make adjustments using the master wheel:

- **Drag the master wheel left or right:** Dragging to the left darkens the selected parameter of the image, dragging to the right lightens that parameter. As you make an adjustment, the YRGB parameters underneath change to reflect the adjustment you're making. To make a Y-only adjustment, hold down the ALT or Command key and drag left or right. Because the color corrector uses YRGB processing, you can get quite creative and create unique affects by adjusting the Y channel only. Y channel adjustments work best when the Lum Mix setting is set to the right side to use YRGB processing vs the left side to use regular RGB processing. Normally, most DaVinci Resolve colorists use the YRGB color corrector as you get a lot more control of color balance without affecting overall gain, so you spend less time getting the look you want.

Adjust the master wheels by dragging the wheel control left or right

Contrast Setting

The Contrast setting gives you control over the distance between the darkest and lightest values of an image. The effect is similar to making opposing adjustments using the lift and gain master wheels. The default setting is 50%.

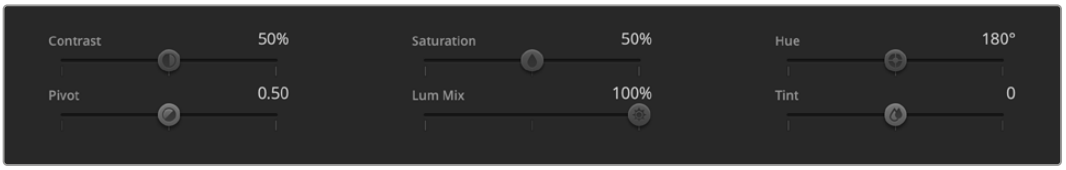

Drag the sliders left or right to adjust Contrast, Saturation, Hue and Lum Mix settings

Saturation Setting

The Saturation setting increases or decreases the amount of color in the image. The default setting is 50%.

Hue Setting

The Hue setting rotates all hues of the image around the full perimeter of the color wheel. The default setting of 180 degrees shows the original distribution of hues. Raising or lowering this value rotates all hues forward or backward along the hue distribution as seen on a color wheel.

Lum Mix Setting

The color corrector built into your Blackmagic URSA Broadcast G2 is based on the DaVinci Resolve primary color corrector. DaVinci has been building color correctors since the early 1980's and more Hollywood films are color graded on DaVinci Resolve than any other method.

This means the color corrector built into your URSA Broadcast G2 has some unique and creatively powerful features. The YRGB processing is one of those features.

When color grading, you can choose to use RGB processing, or YRGB processing. High end colorists use YRGB processing because you have more precise control over color and you can independently adjust the channels with better separation and more creative options.

When the Lum Mix control is set to the right side, you have the 100% output of the YRGB color corrector. When you have the Lum Mix control set to the left side, you get 100% output of the RGB corrector. You can set the Lum Mix to any position between the left and right to get a blend of output from both the RGB and YRGB correctors.

Which is the correct setting to use? That's up to you, as color correction is a pure creative process and there is no right and wrong, and the best setting is what you like the most and what you think looks good!

Pivot Setting

Once the contrast setting is adjusted, modifying the pivot value will adjust the midpoint of the contrast. The Pivot control establishes the contrast balance by placing more or less priority on either side of the luminance scale. By lifting the control, you will increase the overall brightness and clarity of the image, although at the inverse expense of the shadows, which will be reduced.

Tint Setting

Adjusting the tint setting will add green or magenta to the image to help balance the color. This can assist when filming with artificial lighting sources such as fluorescent and sodium vapor lighting fixtures.

Synchronizing Settings

When connected, camera control signals are sent from the ATEM switcher to your Blackmagic URSA Broadcast G2. If a setting is accidentally adjusted from your URSA Broadcast G2, camera control will automatically reset that setting to maintain synchronization.

TIP Even if you disconnect its 12G-SDI input, your URSA Broadcast G2 will keep using any image adjustments made with DaVinci Resolve color correction. This lets you change camera angles without needing to dial in your image settings again. To return your URSA Broadcast G2 to its default color settings, simply power cycle your URSA Broadcast G2 after disconnecting its 12G-SDI input.

Using DaVinci Resolve

Shooting with your Blackmagic URSA Broadcast G2 is only part of the process of creating film and television content, and just as important is the process of media backup and management as well as editing, color correction and encoding final master files. Your Blackmagic URSA Broadcast G2 includes a version of DaVinci Resolve for Mac and Windows so you have a complete solution for shooting and post production!

NOTE We recommend using the latest version of DaVinci Resolve for accurate color treatment of clips shot using URSA Broadcast G2. Version 18 or later will provide accurate color for URSA Broadcast G2 and the latest Blackmagic RAW features like image gyro stabilization using the camera's recorded motion sensor data.

After connecting your CFast, SD card or SSD to your computer, you can use DaVinci Resolve's 'clone' tool, in the 'media' page, to create running backups as you shoot. This is recommended as any type of media is susceptible to becoming damaged or developing a fault so creating backups means your shots will be immune to loss. Once you have used DaVinci Resolve to backup your media, you can then add your clips to the DaVinci media pool, then edit, color correct, and finish your production without ever having to leave DaVinci Resolve.

DaVinci Resolve is the same tool used on most major blockbuster movies, so it's much more than a simple NLE software tool, as it has extremely advanced technology built in for high end digital film. You get the advantage of this technology when you use DaVinci Resolve to edit and color correct your work.

Included here is information on how to get started using DaVinci Resolve with your camera files. Of course, DaVinci Resolve is extremely advanced and includes a lot more features than you immediately see when first looking at its user interface. To learn more about how to use DaVinci Resolve, please check for the DaVinci Resolve instruction manual on the Blackmagic website, where you can also find many training courses and tutorial videos.

Project Manager

Before you import your clips and start editing, you will need to set up your project using the project manager.

The project manager is the first screen you will see when launching DaVinci Resolve, but you can open the manager at any time by clicking on the 'home' icon at the bottom right of the user interface. This is helpful when you want to open previous projects and create new ones.

To create a new project, click on 'new project' at the bottom of the window and give your project a name. Click 'create'.

Using the 'cut' page, you can start working on your edit immediately.

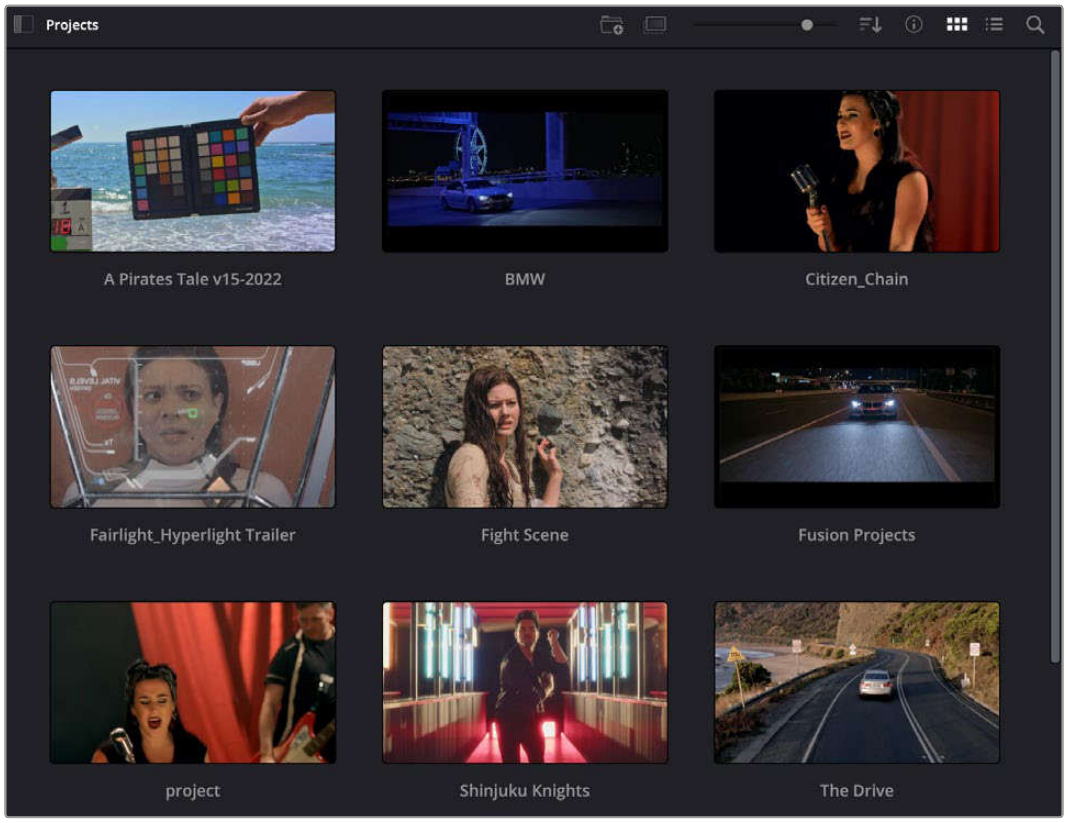

The project manager shows all projects belonging to the current user

For more information about the Project Manager, refer to the DaVinci Resolve manual which is available to download on the Blackmagic Design website support page.

Editing with the Cut Page

The 'cut' page gives you a fast, dynamic editing workflow that lets you quickly assemble, trim and edit clips efficiently.

Two active timelines let you work with your entire edit plus a detailed area simultaneously. This means you can drop clips anywhere on a large timeline, then refine your edit in a detailed timeline within the same workspace. Using this workflow, you can edit on a laptop without needing to zoom in and out and scroll as you work, which can be an enormous time saver.

The Cut Page Layout

When you open the cut page, you will see the media pool, viewer window and timeline. These three primary windows give you complete control over your edit.

The Cut page default workspace, with the Media Pool in icon view

For more information on the Cut page, see the 'the cut page' chapter in the DaVinci Resolve manual.

Media Tabs

At the top left corner of the user interface you will see six tabs.

Click on these tabs to open the media toolsets you will use when creating your edit. For example, the first tab is the media pool and you can see it is already selected. The other tabs are for the sync bin, keyframe editor, media transitions, titles and effects.

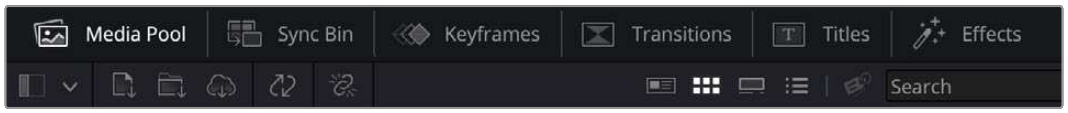

- **Media Pool:** The media pool contains all your clips, folders and files you imported using the media page. You can also import files directly from the cut page, so you don't have to go back to the media page if you want to import a new clip.
- **Sync Bin:** This powerful feature automatically syncs all your clips via timecode, date and time so you can choose angles from all cameras on a multi camera project.
- **Keyframes:** When using automation, for example animating titles and speed ramps, you can edit the animation's keyframes using the keyframe editor.
- **Transitions:** If you click on the neighboring transitions tab, you will see all the video and audio transitions you can use in your edit. These include common transitions such as cross dissolves and motion wipes.
- **Titles:** Next to transitions is the 'titles' tab. Here you can select the title type you want to use. For example a scroll, standard text or lower thirds title. There are also a list of Fusion templates you can use for more animated dynamic titles which can be customized in DaVinci Resolve's 'Fusion' page.

- **Effects:** The fifth tab is the ‘effects’ tab. This provides all the different filters and effects you can use to bring more life to your edit, for example customizable blurs, glows and lens effects. There are many powerful effects to choose from and you can find them quickly using the search tool.

TIP Use the search tool near the media tab icons to find the exact items you are looking for. For example, if you have the transitions tab selected, type “dissolve” in the search tool and only dissolve transition types will be shown in the viewer, making it quicker for you to find the dissolve transition you want.

Viewer Tabs

Near the top left corner of the viewer window you will see the viewer mode buttons.

The viewer mode buttons

These buttons control which viewer is currently being used, including ‘source clip’, ‘source tape’, and ‘timeline’. These viewer modes give you an enormous amount of control when selecting clips for your edit and it’s worth spending a moment to look at how they work.

	Source Clip	The source clip viewer displays a single clip from the media pool and you can set in and out points along the entire length of the viewer timeline. This gives you greater control. Select a source clip to view by double clicking on a clip in the media pool, or dragging it into the viewer.
	Source Tape	Source tape lets you view all the source clips in the media pool. This powerful feature is helpful if you want to quickly search through all your clips to find a specific event. As you scrub the playhead over the clips, you will see their thumbnails selected in the media pool. This means once you have found the clip you want to edit, you can click on the source clip tab and its corresponding source clip will appear in the viewer automatically. The source tape viewer really lets you take advantage of non-linear editing, giving you the freedom to work on your edit, find shots quickly, try new ideas and stay in the moment.
	Timeline	The timeline viewer lets you view the edit timeline so you can play back your project and refine your edits.

Importing Clips to the Media Pool

Now you can start importing media into your project. You can do this in the media pool window of the cut page using the import tools at the top.

Select one of the import options to add media to your project

	Import Media	The import media option will import individual media files selected from your storage location.
	Import Media Folder	To import a folder from your media storage, select the import folder option. When importing a folder, DaVinci Resolve will keep the file structure, treating each folder as a separate bin so you can navigate between bins to find your videos and other media files.

To import media:

1. Click on the 'import media' or 'import media folder' icon.
2. Navigate to your media storage for the media you want to import.
3. Select the file or folder and click 'open'.

Once you've added media to your project, it is a good time to save your changes. DaVinci Resolve features a fast, on the go autosave called 'live save'. Once you save you project once, 'live save' will save further changes as you make them, removing the risk of losing your work.

For more information on 'live save' and other auto save functions, refer to the DaVinci Resolve Manual.

Adding Clips to the Timeline

Now that you are familiar with the media tabs and viewer mode buttons, you can open the media pool and quickly start adding clips to your timeline.

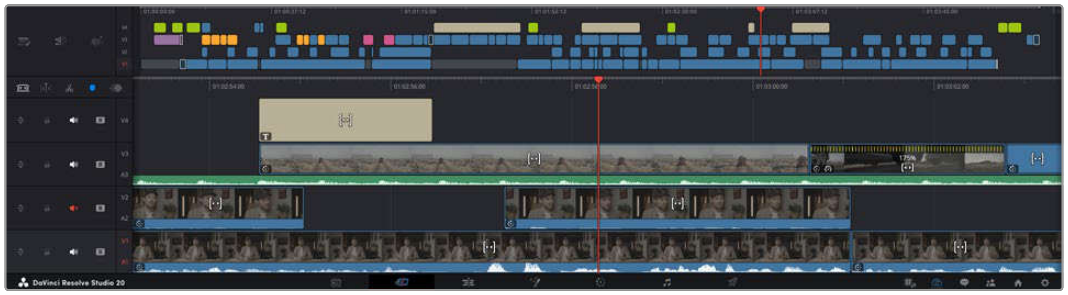

The timeline of the cut page, comprising the upper timeline and the zoomed in timeline below

The timeline is where you will build your edit and is like a board with tracks you can attach clips to, move them around and trim their edits. Tracks let you layer clips over others which gives you more flexibility to try different edits and build transitions and effects. For example, you can try an edit with a clip on one track without affecting other clips on tracks below it.

There are different ways to add clips to the timeline, such as smart insert, append, place on top and more.

NOTE If you are editing clips using a vertical aspect ratio, you can easily set your timeline to vertical by clicking on the 'timeline resolution' quick menu and selecting 'portrait 1080x1920'.

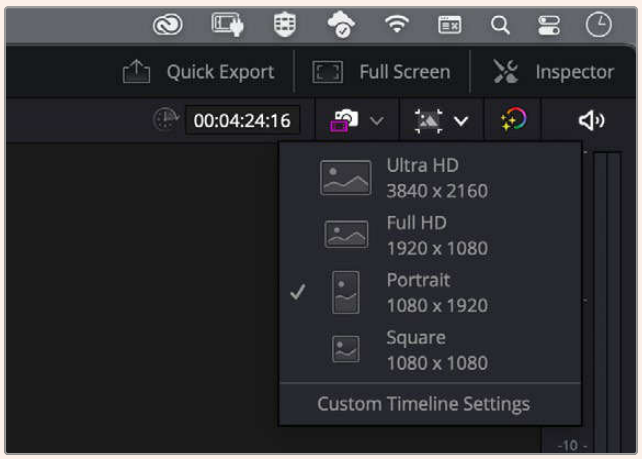

Set the timeline for vertical aspect ratios using the timeline resolution quick menu

Appending Clips

When selecting takes and assembling an edit, you will likely want to add these shots to your timeline one after the other. The append tool is perfect for this task and will get you editing very fast.

Click on the append icon to quickly add clips to the end of the last clip

To append a clip:

1 Double click on a clip in the media pool to open it in the viewer.

2 Using the scratch trim tool, drag the in and out points to select the precise duration of your shot. You can also press the ‘i’ and ‘o’ keyboard shortcuts to set in and out points.

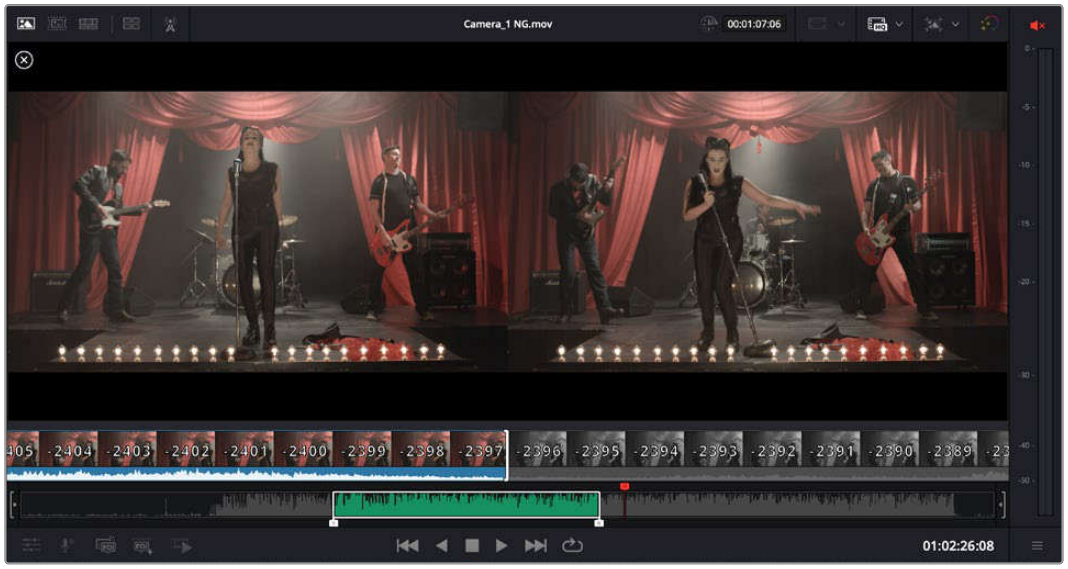

3 Now click the ‘append’ icon underneath the media pool.

Your first clip will be placed at the head of the timeline.

Repeat steps 1 to 3 to keep adding more clips and they will automatically append, ensuring there are no gaps in the timeline.

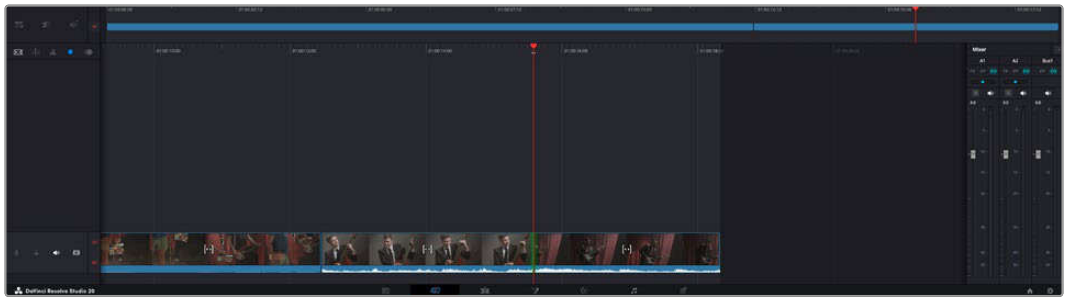

Appending clips ensures there are no gaps between them on the timeline

TIP You can speed up the process further by assigning a keyboard shortcut to the ‘append’ icon. For example, if you assign the ‘P’ key, you can set your in and out points using ‘I’ and ‘O’ then press ‘P’ to append the clip. Refer to the DaVinci Resolve manual for information on how to assign shortcut keys.

Video Only and Audio Only Edits

Normally, any edit function in the Cut page inserts both the audio and video into the timeline. However, there are several scenarios where you would only want either the audio or the video to be used instead.

To add only the video of a clip, click the video only icon above the timeline, it will illuminate red when enabled.

Now only the video portion will be added when clips are appended to the timeline.

You can also use the video only or audio only setting to limit transitions to only the video or audio of a cut.

To add a transition to audio only:

1. Click the audio only icon to enable it.
2. Move the playhead to near the cut point.
3. Click the 'dissolve' icon above the timeline. The dissolve will be applied to the audio tracks only.

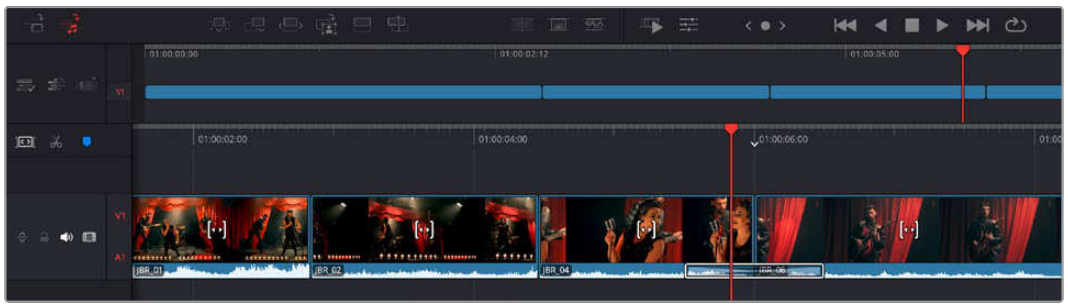

Trimming Clips on the Timeline

With clips added to the timeline, you have complete control to move them around and trim edits.

To trim an edit, hover the mouse over the start or end of a clip, then click and drag it left or right. For example, drag the end of the clip left or right to decrease or increase its duration. You might notice that all clips after that edit will shift on the timeline to accommodate the new adjustment. This is one way the 'cut' page helps to save you time.

You can even pick the clip up and drop it on a new video track in the large timeline without having to zoom in or out. This speeds up the edit process because it minimizes time navigating a long timeline.

Toolbar

The toolbar to the left of the upper timeline contains action and option menus for the timeline.

	Timeline Options	Timeline options let you set how the clips and timeline are displayed, such as displaying clip names and setting the playhead behavior.
	Timeline Actions	Timeline actions can be used to add new tracks or make modifications to the timeline.
	Edit Actions	Edit actions are used to add new clips on the timeline or make modifcations and include trimming the start and end to playhead along with resyncing multicam clips.

Audio Trim View

Audio trim view helps you make accurate audio edits by expanding the audio waveform in the timeline. This is useful if you're editing a dialogue scene or a music clip and makes it easy to find an edit point between words or beats.

To use Trim to Audio view:

1 Click the timeline options icon and check 'trim to audio'.

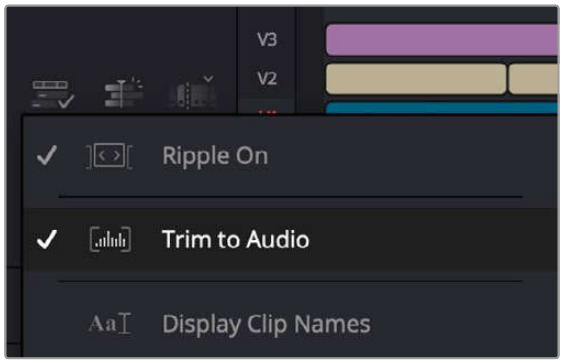

Check 'trim to audio'

2 Now when you trim an edit you will see an expanded waveform in the timeline. When you finish trimming, the clips in the timeline will return to their normal size.

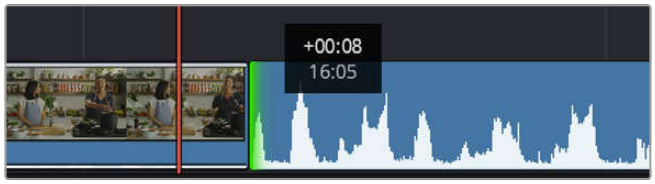

Trim to audio view expands the audio waveform in the timeline.

After you have finished editing clips using the 'cut' page, you might want to add a title. The next section will show you how.

Adding Titles

Placing a title on your timeline is easy and you have many options.

To see the different types of titles you can use, click on the 'titles' media tab at the top left corner of the user interface. In the selection window you will see all the different title generators you can use displayed as thumbnails, from lower thirds, scrolls, to a standard text title. You can even add any of the Fusion titles which are animated titles that you can customize.

Previewing Titles

Before you add a title to your timeline you can preview it from the 'titles' selection window. This lets you quickly scan through all the available options before making a choice.

To preview a title:

1 Click the option menu to the top right-hand side of the titles panel and check 'hover scrub preview'.

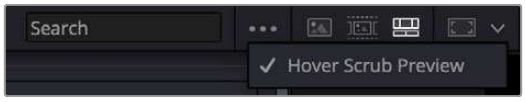

Enable Hover Scrub Preview from the option menu.

2 In the 'titles' selection window, hover your mouse pointer over a thumbnail to preview a title in the viewer. If you are previewing an animated or Fusion title move the pointer across the title's thumbnail from left to right to see the animation.

Hover over a title's thumbnail to preview it in the viewer.

Once you've chosen a title you can add it to your timeline.

To add a standard title:

1 Click on the title and drag it onto the timeline. It doesn't matter which timeline, but for greater accuracy we recommend using the detailed timeline. The title will automatically create a new video track for the title and will snap to the playhead.

2 Release the mouse and the title will appear on the new track. You can now move it or change its duration like you would another video clip.

3 To edit the title, click on the new title clip and then click the tools icon underneath the clip viewer.

You will now see a row of tools you can use to modify the title clip. For example transform, crop, dynamic zoom and more.

4 Now click the inspector tab.

This will open the inspector window where you can type in the title you want and edit the text settings, for example tracking, line spacing, font type, color and more.

You have a lot of options to customize the title exactly how you want it. We recommend playing with all the different settings to see how they can change the appearance and shape of your title.

TIP You can also use the hover scrub function to preview effects, transitions, generators and filters on the 'cut' and 'edit' pages.

Working with Blackmagic RAW Files

Blackmagic RAW clips give you maximum flexibility in post production. This lets you make adjustments to clips, such as white balance and ISO settings, as if you were changing the original camera settings. Working with Blackmagic RAW also retains more tonal information within shadows and highlights, which is useful for recovering details, for example in blown out skies and dark areas of the picture.

It's worth shooting in Blackmagic RAW if you are after the highest possible quality, or for shots where there is an extreme variance between highlights and shadows and you may need to push and pull those regions as much as possible in the grade.

The speed and small file size of Blackmagic RAW means you don't need to make proxy files and playback is just like a standard video clip. This section of the manual describes the features of Blackmagic RAW and how to use Blackmagic RAW files in your DaVinci Resolve workflow.

TIP It is a good practice to adjust the Blackmagic RAW settings for your clips on the 'color' page before you start color grading.

Clip Settings for Blackmagic RAW

When you first import Blackmagic RAW files, DaVinci Resolve will decode the camera data contained in the files using the ISO, white balance and tint settings used at the time of shooting. If you're happy with the look of these settings, you can start editing right away.

The great thing about shooting Blackmagic RAW is that you're not tied to these settings at all! The breadth of available post processing options when working with Blackmagic RAW files means that you'll develop your own workflow over time. Experimenting with the 'clip' settings for each clip in the 'camera raw' tab will show you just how powerful and flexible working with Blackmagic RAW can be.

The 'color science' menu lets you choose whether to interpret your footage with generation 4 color science or generation 5 color science. URSA Cine uses Blackmagic Design generation 5 color science. Files made on different cameras with generation 4 color science can be reinterpreted with generation 5 color science to match your shots from URSA Cine. Alternatively, if you are shooting mainly with cameras that create Blackmagic RAW files with generation 4 color science, you can mix in clips shot on URSA Cine with generation 5 color

science by reverting them to generation 4 color science. This makes it easy to match shots filmed on cameras using different generations of Blackmagic color science.

In the 'camera raw' tab, select 'clip' from the 'decode using' menu to make adjustments to your clip's Blackmagic RAW settings

Changing Blackmagic RAW Settings

Once you have set DaVinci Resolve to enable clip settings for Blackmagic RAW, the clip settings and gamma controls are now adjustable. Adjusting these settings to optimize your clips can bring them close to a full primaries grade. This is especially powerful when using DaVinci Resolve's scopes which can help you neutralize and balance the clips ready for applying a look.

The following information contains descriptions for the clip and gamma controls.

ISO

The ISO value can be changed by increasing or decreasing this setting. This setting is helpful if you need to set the clip to a brighter or darker starting point for optimization.

Highlight Recovery

Check the box to reconstruct highlight information in clipped channels using information from non-clipped channels.

Gamut Compression

Check the box to automatically maintain safe gamut levels.

Color Temp

Adjust the color temperature to warm or cool the image. This can be used to help neutralize the color balance in each image.

Tint

Adjusting this setting will add green or magenta into the image to help balance the color.

Exposure

Use this setting to refine the overall brightness of the image.

Saturation

Saturation controls default at 1 and range from 0 for the minimum saturation to 4 for maximum saturation.

Contrast

Defaulting at 1.0, drag the slider to the left for the least amount of contrast at 0 or to the right to increase the contrast up to 2.

Midpoint

In Blackmagic Design Film, your middle gray value defaults to 0.38, or 38.4%. Drag the slider to the left to lower your midpoint or to the right to raise it to 100. When contrast is adjusted away from the default setting, you can modify your highlight and shadow rolloff.

Highlight Rolloff

Adjust the highlights by dragging the slider to the left to lower the value to 0, or to the right to increase the highlights to 2. The default value is 1.

Shadow Rolloff

Drag the slider to the left to lower your shadows to 0 or to the right to raise your shadows to 2.

White Level

Adjust the white point of the gamma curve by dragging the slider from the highest value of 2 to the lowest value of 0. The default value is 1.

Black Level

Raise the black point of the custom gamma curve by dragging the slider to the right from the lowest value of -1 to a maximum of 1. The default value is 0.

Use Video Black Level

Check the box to set your black levels to video.

Export Frame

Clicking the 'export frame' button lets you export a single frame from your Blackmagic RAW clip.

Update Sidecar

Click this button to update the Blackmagic RAW sidecar file for the current clip.

Any changes you have made to your Blackmagic RAW clips will be identified by the gamma setting changing to Blackmagic Design Custom.

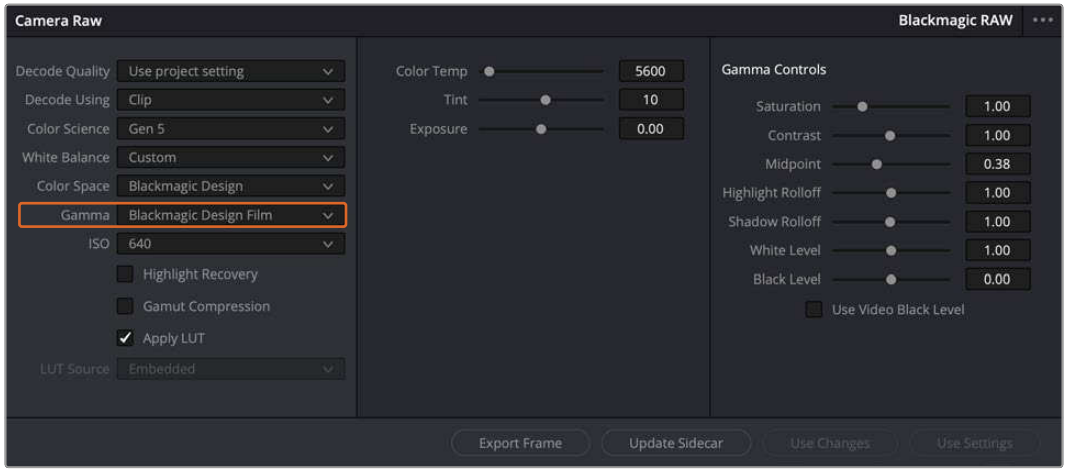

If you want to revert your clip to one of the default gamma options available, simply select it from the gamma menu

TIP Gamma controls are disabled for footage shot with the 'video' dynamic range, but you have not lost your Blackmagic RAW data. Simply select Blackmagic Design Film or Blackmagic Design Extended Video from the dropdown gamma menu and make your adjustments.

To save your Blackmagic RAW changes:

1 Adjust the gamma controls for your Blackmagic RAW clip.

2 Click the 'update sidecar' button.

A 'sidecar' file will now be created in the same folder as your .braw file. When another user imports the Blackmagic RAW files, the sidecar files will automatically be read by DaVinci Resolve. If you make additional adjustments, press 'update sidecar' again.

TIP To remove your sidecar file, you can simply delete it from its location on your media drive.

Project Settings for Blackmagic RAW

If you need to make a setting change that is common to all the clips, for example a global change to the white balance or ISO setting, you can set the clips to use the project 'camera raw' settings and make global changes from there.

To set project settings for Blackmagic RAW:

1 Enter the project settings menu by clicking 'file,' and selecting 'project settings.'

2 In the 'camera RAW' tab, you'll see a menu next to RAW profile. Click on the arrow to select Blackmagic RAW from the list.

3 Select 'project' in the 'decode using' menu.

4 Select a color science option from the menu.

5 Set the white balance to 'custom'.

6 Select 'Blackmagic Design Custom' from the gamma menu. Set the color space to 'Blackmagic Design'.

7 Choose your resolution from the 'decode quality' menu. A lower resolution will give you better playback on limited systems. You also have the flexibility to change to full resolution later on before delivery for the highest quality output.

Now you can adjust the camera settings for your clips such as saturation, contrast and midpoint. This will affect all clips in your project that are set to decode using 'project'.

Color Correcting your Clips with the Color Page

Now with your clips on the timeline and titles added, you can start color correcting using the 'color' page. The color page is extremely powerful and will define the overall look of your film, but for this example a good place to start is to neutralize all your clips so they are consistent. You can also return to the 'cut' or 'edit' page at any time if you want to make changes to your edit.

The color page lets you adjust the look of your edit and in many ways color correction is an art form in itself. You are really adding emotion to your work when you add color correction. It's an incredibly creative part of the workflow and very satisfying when you learn these skills and can see your work come alive! This is usually the first step and is referred to as primary color correction, or adjusting the primaries. After primary color correction is done, you can then make secondary color correction adjustments which is where you can make extremely precise color adjustments of specific objects in your images. That is a lot of fun, but is normally done after primaries because it helps make the process more efficient and you will get a better result!

First click on the ‘color’ tab to open the color page.

You’ll see the camera raw settings, color wheels, curves palettes and general color correction tools as well as the preview and nodes window. Don’t feel overwhelmed by the vast array of features in front of you, they are all there to help you get the most amazing looking pictures. This getting started section will show the basics, but for more detailed information refer to the relevant sections in the manual. They will show you exactly what all the tools are for and how to use them in easy to follow steps. You’ll learn the same techniques the professionals use in high end color correction facilities.

Generally, the first step for primary color correction is to optimize the levels for shadows, mid tones and highlights in your clips. In other words adjust the ‘lift’, ‘gamma’ and ‘gain’ settings. This will help get your pictures looking their brightest and best with a clean, balanced starting point from where you can begin grading the ‘look’ of your film. To optimize the levels, it’s helpful to use the scopes.

Using Scopes

Most colorists make creative color choices by focusing on the emotion and the look they want their program to have and then simply work using the monitor to achieve that look. You can look at everyday objects and how different types of light interact with them to generate ideas on what you can do with your images and a little practice.

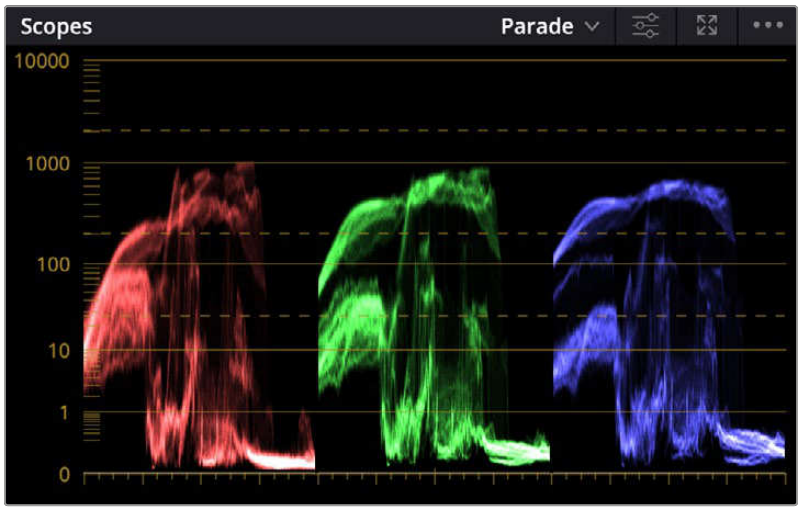

The parade scope helps you optimize highlights, mid tones and shadows

Another way to color grade is to use the built in scopes to help you balance shots. You can open a single video scope by clicking the ‘scope’ button, which is the second from the right on the palette toolbar. You can choose to display a waveform, parade, vectorscope, histogram or CIE chromaticity scope. Using these scopes you can monitor your tonal balance, check the levels of your video to avoid crushing your blacks and clipping the highlights, plus monitor any color cast in your clips.

The ‘color wheels’ palette contains the ‘lift’, ‘gamma’ and ‘gain’ controls which will generally constitute your first adjustment. If you’ve previously had experience with color correction, these should resemble controls you’ve seen in other applications for doing color and contrast adjustments.

The 'lift, 'gamma', 'gain' and 'offset' color wheels give you total control over the color and tonal balance of your clips. To make a uniform adjustment to all colors for each tonal region, drag the dial underneath the color wheels back and forth

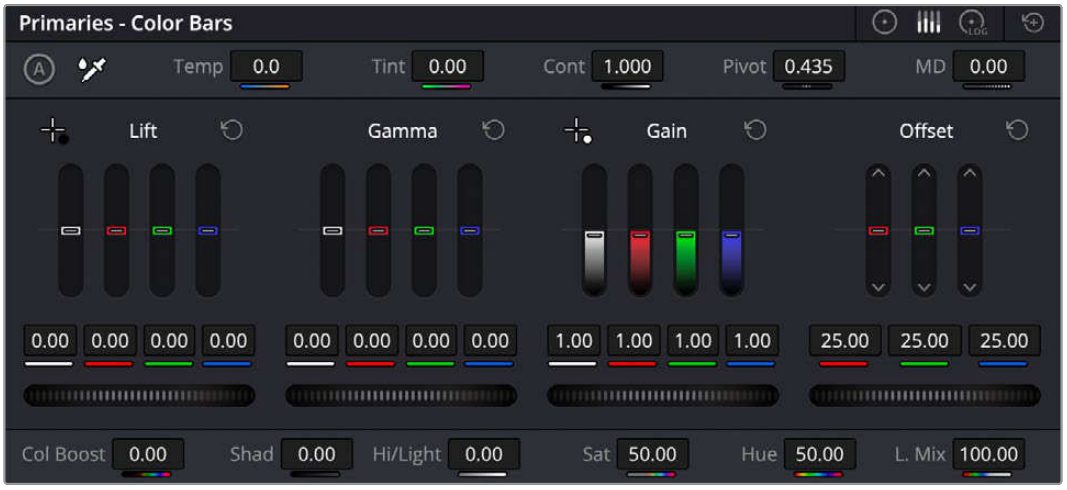

The primaries bars make color adjustments easier when using a mouse.

For more accurate control of each color using a mouse, you can change the color wheels to 'primaries bars' which let you adjust each color and luminance channel for the lift, gamma and gain controls separately. Simply select 'primaries bars' from the dropdown menu near the top right of the color wheels.

- **Adjusting the 'lift':** With your clip selected on the color timeline, click on the 'lift' dial underneath the first color wheel. Slide it back and forth and watch how it affects your image. You'll see the brightness of the dark regions of your picture increase and decrease.

  Set it to where you want the dark areas to look their best. If you decrease the lift too much, you'll lose details in the blacks and you can use the parade scope to help avoid this. The optimal position for blacks on the waveform is just above the bottom line of the parade scope.

- **Adjusting the 'gain':** Click on the 'gain' dial and slide it back and forth. This adjusts the highlights which are the brightest areas of your clip. The highlights are shown on the top section of the waveform on the parade scope. For a brightly lit shot, these are best positioned just below the top line of the waveform scope. If the highlights rise above the top line of the waveform scope, they will clip and you will lose details in the brightest regions of your image.

- **Adjusting the 'gamma':** Click on the 'gamma' dial underneath the color wheel and slide it back and forth. As you increase the gamma you'll see the brightness of the image increase. Notice the middle section of the waveform will also move as you adjust the gamma. This represents the mid tones of your clip. The optimal position for mid tones generally falls between 50 to 70% on the waveform scope. However, this can be subjective based on the look you are creating and the lighting conditions in the clip.

You can also use the curves palette to make primary color corrections. Simply click to create control points on the diagonal line inside the curve graph, and drag them up or down to adjust the master RGB contrast at different areas of image tonality. The optimum points to adjust are the bottom third, mid, and top third of the curve line.

There are many more ways of doing primary color correction in DaVinci Resolve.

The curves palette is another tool you can use to make primary color corrections, or enhance specific areas of your clip when using a power window

Secondary Color Correction

If you want to adjust a specific part of your image then you need to use secondary corrections. The adjustments you have been doing up until now using the lift, gamma and gain adjustments affect the whole image at the same time and so they are called primary color corrections.

However, if you need to adjust specific parts of your image, say for example you wanted to improve the color in the grass in a scene, or you wanted to deepen the blue in a sky, then you can use secondary corrections. Secondary color corrections are where you select a part of the image and then adjust only that part. With nodes, you can stack multiple secondary corrections so you can keep working parts of your image until everything is just right! You can even use windows and tracking to allow the selections to follow movement in your images.

Qualifying a Color

Often you'll find a specific color in your clip can be enhanced, for example grass by the side of a road, or the blue in a sky, or you may need to adjust color on a specific object to focus the audience's attention on it. You can easily do this by using the HSL qualifier tool.

Using the HSL qualifier to select colors in your image is helpful when you want to make areas of your image 'pop', to add contrast, or to help draw the audience's attention to certain areas of your shot

To qualify a color:

1 Add a new serial node.

2 Open the 'qualifier' palette and make sure the 'selection range' picker tool is selected.

3 Click on the color in your clip you want to affect.

4 Usually you'll need to make some adjustments to soften the edges of your selection and limit the region to only the desired color. Click on the 'highlight' button above the viewer to see your selection.

5 Adjust the 'width' control in the 'hue' window to broaden or narrow your selection.

Experiment with the high, low and softness controls to see how to refine your selection. Now you can make corrections to your selected color using the color wheels or custom curves.

Sometimes your selection can spill into areas of the shot you don't want to affect. You can easily mask out the unwanted areas using a power window. Simply create a new window and shape it to select only the area of color you want. If your selected color moves in the shot, you can use the tracking feature to track your power window.

Adding a Power Window

Power windows are an extremely effective secondary color correction tool that can be used to isolate specific regions of your clips. These regions don't have to be static, but can be tracked to move with a camera pan, tilt or rotation, plus the movement of the region itself.

Use power windows to mask out areas you don't want to be affected by the HSL qualifier secondary adjustments

For example, you can track a window on a person in order to make color and contrast changes just to that person without affecting his or her surroundings. By making corrections like this you can influence the audience's attention on areas you want them to notice.

To add a power window to your clip:

1. Add a new serial node.
2. Open the 'window' palette and select a window shape by clicking on a shape icon. Your selected window shape will appear on the node.
3. Resize the shape by clicking and dragging the blue points around the shape. The red points adjust the edge softness. You can position the shape by clicking the center point and moving it to the area you want to isolate. Rotate the window using the point connected to the center.

Now you can make color corrections to your image in just the area you want.

Power windows let you make secondary corrections to specific parts of your image

Tracking a Window

The camera, object or area in your shot may be moving, so to make sure your window stays on your selected object or area, you can use DaVinci Resolve's powerful tracking feature. The tracker analyzes the pan, tilt, zoom and rotation of the camera or object in your clip so you can match your windows to that movement. If this isn't done, your correction can move off the selected target and call attention to itself, which you probably don't want.

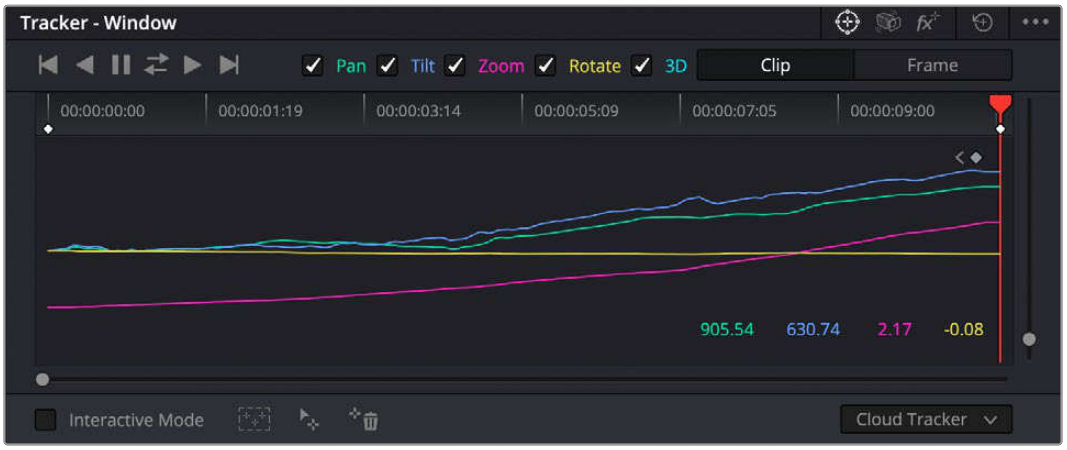

You can track objects or areas in your clip using the tracker feature so power windows can follow the action

To track a window to a moving object:

1 Create a new serial node and add a power window.

2 Go to the start of your clip and position and size the window to highlight just the object or area you want.

3 Open the 'tracker' palette. Select the pan, tilt, zoom, rotate, and perspective 3D settings appropriate for the movement in your clip by checking or unchecking the relevant 'analyze' checkboxes.

4 Click on the 'forward' arrow to the left of the checkboxes. DaVinci Resolve will now apply a cluster of tracking points on your clip and then step through the frames to analyze the movement. When the tracking is done, your power window will follow the path of the movement in your clip.

Most of the time automatic tracking is successful, but scenes can be complex and sometimes an object can pass in front of your selected area, interrupting or affecting your track. This can be solved manually using the keyframe editor. Refer to the DaVinci Resolve manual to find out more.

Using Plugins

While making secondary color corrections you can also add Resolve FX or Open FX plugins to create fast, interesting looks and effects using the 'color' page, or imaginative transitions and effects on your clips on the 'cut' and 'edit' pages. Resolve FX are installed with DaVinci Resolve, OFX plugins can be purchased and downloaded from third party suppliers.

After installing a set of OFX plugins, you can access them or Resolve FX plugins on the color page by opening the Open FX inspector to the right of the 'node editor'. Once you create a new serial node, simply click the 'Open FX' button to open the FX library and drag and drop a plugin onto the new node. If the plugin has editable settings, you can adjust these in the adjoining 'settings' panel.

OFX plugins are a quick and easy way to create an imaginative and interesting look

In the 'edit' page you can add plugin filters, generators and transitions to clips by opening the 'Open FX' panel in the 'effects library' and dragging your selected plugin onto the video clip or track above your clip on the timeline depending on the plugin requirements.

Mixing Your Audio

Mixing Audio in the Edit Page

Once you have edited and color corrected your project, you can begin to mix your audio. DaVinci Resolve has a helpful set of features for editing, mixing and mastering audio for your project directly in the 'edit' page. For projects requiring more advanced audio tools, the Fairlight page provides you with a full audio post production environment. If you are already familiar with the edit page and want to move straight to Fairlight, skip this section and move onto the next.

Adding Audio Tracks

If you are working in the edit page and want to mix a basic sound edit with lots of sound effects and music, you can easily add more audio tracks when you need them. This can be helpful when building your sound, and separating your audio elements into individual tracks, for example, dialogue, sound effects and music.

To Add an Audio Track to the Edit Page

Right click next to the name of any audio track on your timeline and select 'add track' and choose from the options, including 'mono', 'stereo', and '5.1'. This will add the track to the bottom of the track list. Alternatively select 'add tracks' and select the position you would like the new track or multiple tracks placed.

Your new audio track will appear on the timeline.

> **TIP** If you wish to change the type of track after creating it, right click next to the name of the track and select 'change track type to' and select the type of audio track you want, such as stereo, mono or 5.1.

Adjusting Audio Levels in the Timeline

Each clip of audio in the timeline has a volume overlay that lets you set that clip's level by simply dragging it up or down with the pointer. This overlay corresponds to the Volume parameter in the Inspector.

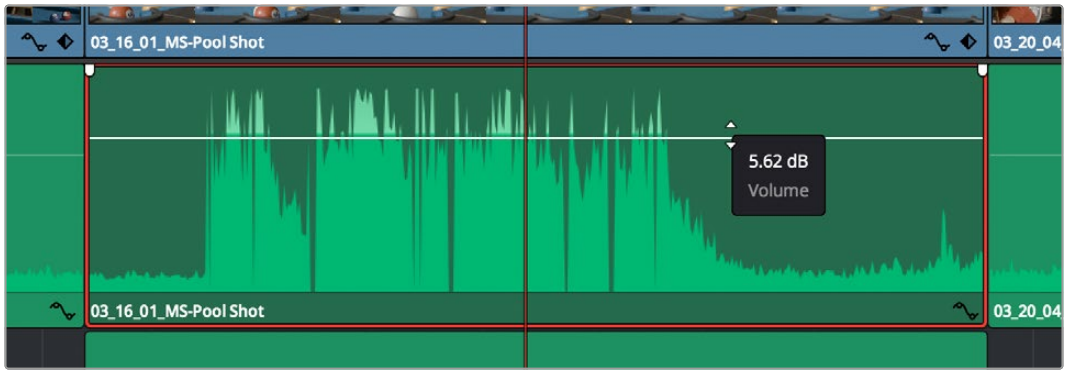

Dragging a volume overlay to adjust the clip level

For projects requiring more advanced audio tools, the Fairlight page provides you with a full audio post production environment.

The Fairlight Page

The ‘Fairlight’ page in DaVinci Resolve is where you adjust your project audio. In single monitor mode, this page gives you an optimized look at the audio tracks of your project, with an expanded mixer and custom monitoring controls that make it easy to evaluate and adjust levels in order to create a smooth and harmonious mix. Don’t feel overwhelmed by the vast array of features in front of you, they are all there to help you deliver the best audio quality for your project.

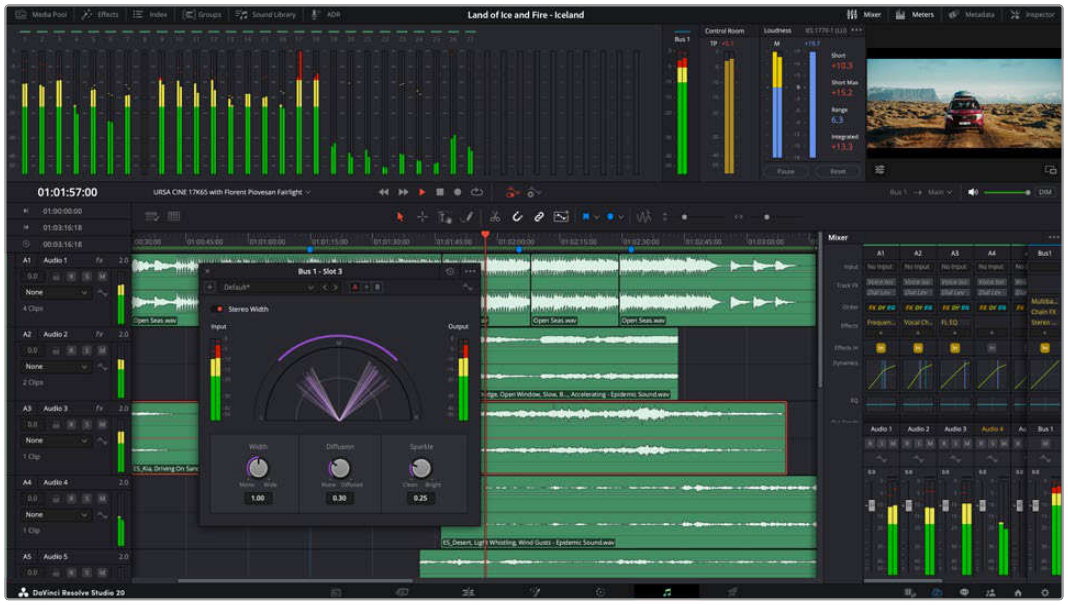

This guide provides a basic overview of the features on the Fairlight page, but to learn more about all the details for each feature, refer to the DaVinci Resolve manual. The DaVinci Resolve manual provides details on the purpose of each tool and describes how to use them in easy to follow steps.

The Audio Timeline

- **Track Header:** At the left of each track is a header area that displays the track number, track name, track color, audio channels, fader value and audio meters. The track header also contains different controls for locking and unlocking tracks, plus solo and muting controls. These controls can help to keep your tracks organized, and let you preview individual tracks one at a time. The keyframe spline editor lets you edit keyframes for any item with splines for smoothing automation.
- **Tracks:** Each track on the Fairlight page is divided into lanes, which show each individual channel of clip audio for editing and mixing. The edit page hides these individual audio channels, displaying only a single clip in the timeline to make it easier to edit multi channel sources without needing to manage a huge number of tracks.

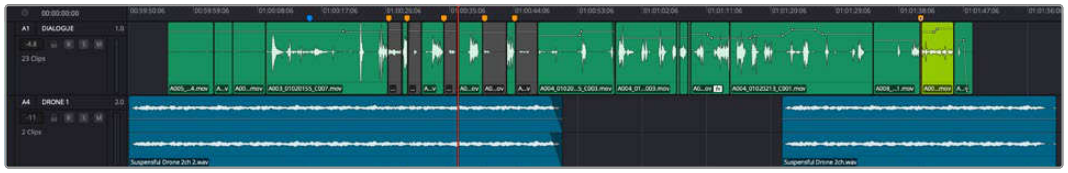

The track header on track A1 indicates a mono track with a single lane for mono audio, and the A2 track header indicates a stereo track with two lanes to accommodate stereo audio

What is a Bus?

A bus is essentially a destination channel made up of audio sources grouped together into a single signal that can be controlled via a single channel strip. Fairlight automatically creates a bus for you and all the audio tracks in your timeline are sent to this bus by default, this means you can adjust the overall level of your audio mix once you have adjusted the level of each individual track.

If your edit is a bit more complex you can create more buses and combine multiple tracks of audio that belong to the same category such as dialogue, music or effects so that everything in that category can be mixed as a single audio signal. For example, if you have five dialogue tracks, you can route the output of all five dialogue tracks to a separate bus, and the level of all dialogue can then be mixed with a single set of controls.

The Fairlight Flexbus structure gives you complete flexibility over bus types and signal routing including the option for bus-to-bus, track-to-bus and bus-to-track routing. For more information on audio bus settings in Fairlight, refer to the DaVinci Resolve manual.

The Mixer

Each audio track in your timeline corresponds to an individual channel strip in the Mixer, and by default there's a single strip on the right for the default bus labeled 'Bus 1'. Additional channel strips will appear on the right hand side with a set of controls for each additional bus you create. A set of graphical controls allows you to assign track channels to output channels, adjust EQ and dynamics, set levels and record automation, pan stereo and surround audio, and mute and solo tracks.

The audio mixer, with channel strips corresponding to the tracks in the timeline

Using the Equalizer to Enhance your Audio

After adjusting the audio levels of your audio clips in your project, you may find that the audio needs further finessing. In some cases you may find that the dialogue, music and sound effects are competing for the same frequency on the audio spectrum, making your audio too busy and unclear. This is where using EQ can help, as it allows you to specify the parts of the audio spectrum that each track occupies. You can also use an equalizer to help remove unwanted elements from your audio by isolating and reducing the level on particular frequencies that contain low rumbles, hums, wind noise and hiss, or simply to improve the overall quality of your sound so it is more pleasing to listen to.

DaVinci Resolve provides EQ filters that can be applied at a clip level to each individual clip or at the track level to affect entire tracks. Each audio clip in the timeline has a four band equalizer in the inspector panel, and each track has a 6 band parametric equalizer in the mixer panel. The graphical and numeric controls for boosting or attenuating different ranges of frequencies, and different filter types allow you to define the shape of the EQ curve.

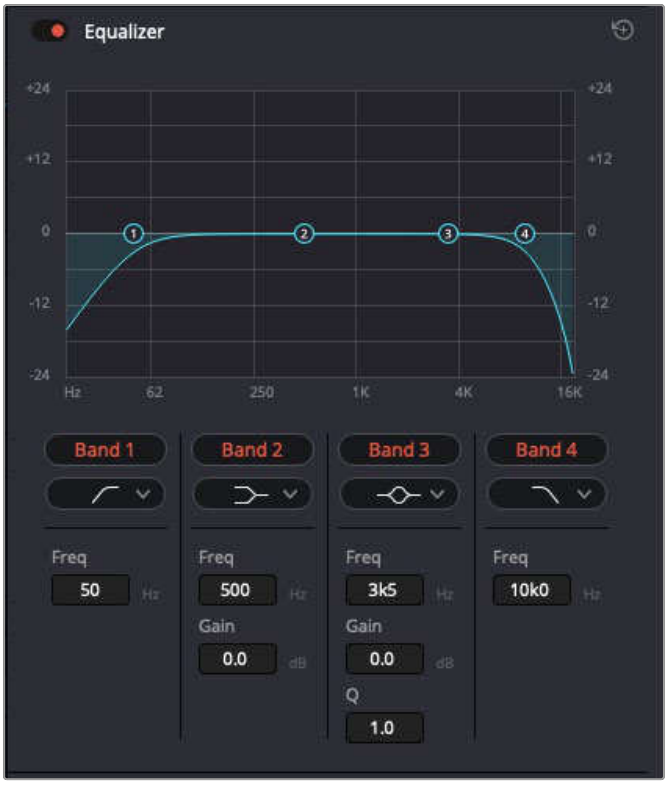

The four band equalizer can be applied to every clip in the timeline

Outer bands let you make band filter adjustments using hi-shelf, lo-shelf, hi-pass and lo-pass filters. A pass filter affects all the frequencies above or below a particular frequency, by removing those frequencies completely from the signal. For example, a high pass filter will allow the high frequencies to pass through the filter while cutting the low frequencies. Any frequencies outside the cutoff frequency are cut gradually in a downward sloping curve.

A shelf filter is less aggressive, and is useful when you want to shape the overall top end or low end of the signal without completely removing those frequencies. The shelf filter boosts or cuts the target frequency and every frequency either above or below it evenly, depending on whether you use a high shelf or low shelf.

The middle sets of band controls let you make a wide variety of equalization adjustments, and can be switched between lo-shelf, bell, notch, and hi-shelf filtering options.

- **Bell:** Bell filters boost or cut frequencies around a given center point of the bell curve, and as the name suggests the shape of the curve is like a bell.
- **Notch:** Notch filters allow you to specifically target a very narrow range of frequencies. For example, removing a mains hum at 50 or 60Hz.
- **Lo-Shelf:** Low shelf filters boost or cut the target frequency at the low end, and every frequency below it
- **Hi-Shelf:** High shelf filters boost or cut the target frequency at the high end, and every frequency above it

To add EQ to an individual clip:

1 Select the clip in the timeline that you want to add the EQ filter to.

2 Click on the inspector and then click the 'equalizer' enable button.

To add EQ to a track:

1 Double click in the EQ section for one of your tracks in the mixer to open the equalizer for that track.

2 Select the band filter type from the dropdown menu for the band you want to adjust.

The EQ section in the mixer panel indicating an EQ curve has been applied to track one

The 6 Band parametric equalizer that can be applied to every track

Once you have added EQ to your clip or track, you can adjust the EQ for each band. Note that controls may vary depending on which band filter type is selected.

To adjust the EQ for a band filter:

1. Select the band filter type from the dropdown menu for the band you want to adjust.
2. Adjust the ‘frequency’ value to select the center frequency of the EQ adjustment.
3. Adjust the ‘gain’ value to boost or attenuate the frequencies governed by that band.
4. Use the ‘Q factor’ value to adjust the width of affected frequencies.

Use the reset button to reset all controls in the EQ window to their defaults.

Fairlight has many controls you can use to improve the quality of each audio track. You can add more tracks and arrange buses to organize them, plus add effects like delay or reverb, and generally perfect your audio mix.

Adding VFX and Compositing on the Fusion Page

Now that you have completed your edit, you can open the Fusion page to add 2D or 3D visual effects and motion graphics right within DaVinci Resolve. Unlike layer based compositing software, Fusion uses nodes, giving you the freedom to build complex effects while routing image data in any direction. The nodes window clearly shows every tool used along the way. If you have experienced the node workflow in the color page, this will feel familiar to you.

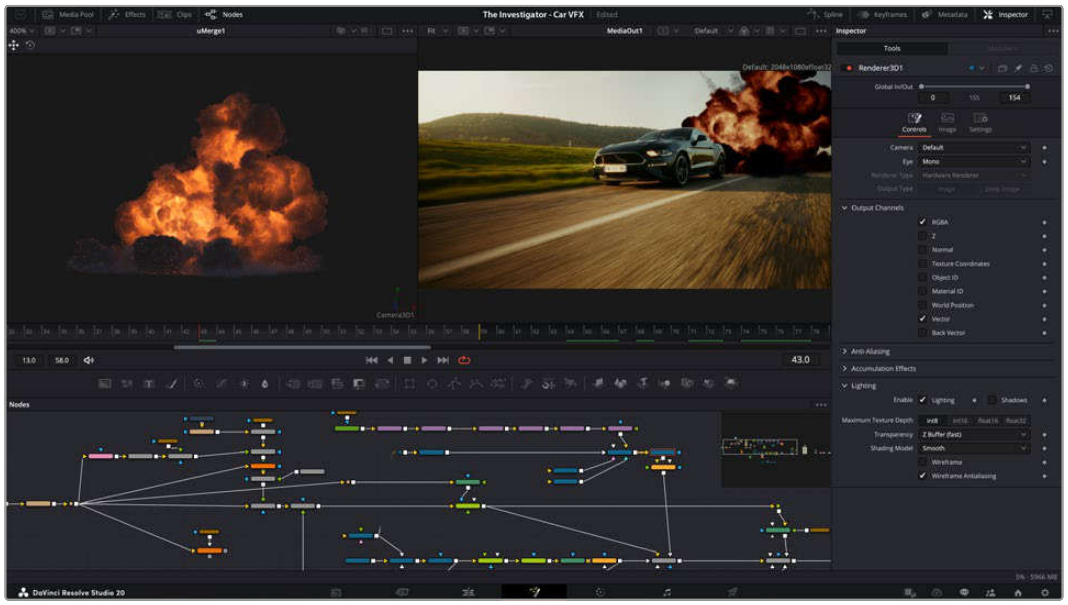

The Fusion Page

The Fusion page features 2 viewer windows across the top with transport controls to view your media, an inspector window to the right to access tool settings, and a nodes window at the bottom where you build your composition. While the viewers and transport controls are always visible, clicking on the icons on the interface toolbar at the very top of the display will let you show or hide the nodes and inspector windows, or reveal or hide additional windows including the effects library and editors for spline and keyframes.

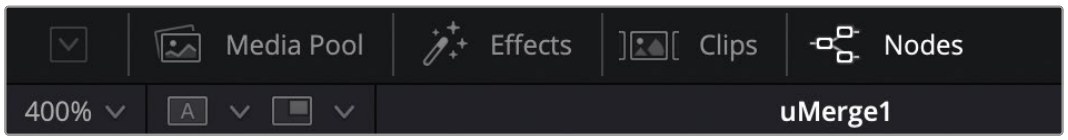

- **Media Pool:** The media pool functions the same way as it appears in the edit page. Simply drag additional media from your bins directly to your composition.
- **Effects:** The effects library is where you will find your Fusion tools and templates sorted into categories including particle, tracking, filters and generators. You can either click on the tool or drag it to the nodes area to add it to your composition. The media pool and effects library take up the same screen area, so you can swap between the two to keep your viewers as large as possible.
- **Clips:** Clicking the clips tab will reveal or hide thumbnails representing clips on your timeline. The thumbnails are located underneath the nodes editor, letting you instantly navigate to other clips.

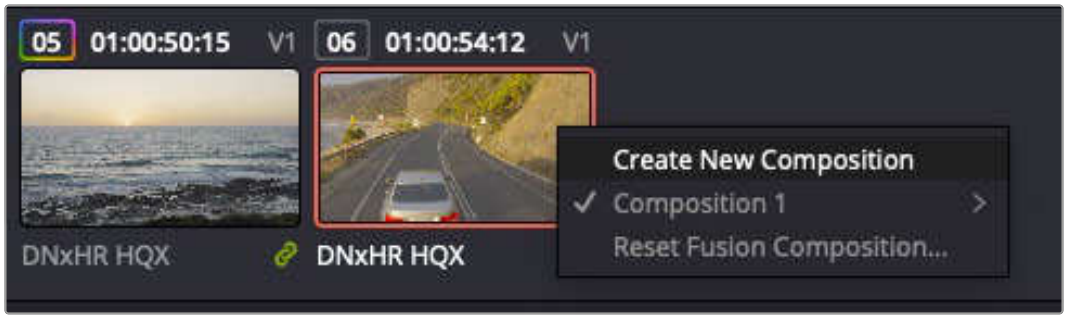

Create a new version of your composition by right clicking on a thumbnail and selecting 'create new composition'.

- **Viewers:** The viewers are always visible and let you see the different views of your composition, for example an overall 3D perspective via the merge 3D node, a camera output, or your final render output. These viewers also let you see how your changes are affecting a specific element.

  You can choose which nodes to view by clicking on a node and typing '1' for the left viewer or '2' for the right viewer. White button icons appear beneath the node to let you know which viewer it is assigned to. If you're using external video monitoring, there will be a third button available to route your media to your external video monitor.

> **TIP** You can also assign a node to a viewer by dragging the node into the viewer itself.

The transport controls underneath the viewers let you skip to the start or end of the clip, play forward or reverse, or stop playback. The time ruler displays the entire range of a clip, with yellow marks indicating the in and out points.

The yellow marks on the time ruler indicate your clip's in and out points on your timeline. If you are using a Fusion clip or compound clip, the time ruler will only show you the duration of the clip as it appears on the timeline, without handles.

- **Nodes:** The nodes window is the heart of the Fusion page where you build your node tree by connecting tools together from one node's output to another node's input. This area will change size depending on which editors are open, for example the spline or keyframes editor. A toolbar at the top of the nodes area features the most commonly used tools for fast access.
- **Spline:** When the spline editor is open, it will appear to the right of the nodes window. This editor lets you make precise adjustments to each node, such as smoothing the animation between two keyframes using bezier curves.
- **Keyframes:** Keyframes for each tool can be added, removed or modified using the keyframes editor. This also appears to the right of the nodes viewer.
- **Metadata:** The metadata window will show you metadata available for the active clip, including the codec, frame rate and timecode.
- **Inspector:** The inspector in the top right corner displays all settings and modifiers available for one or more selected nodes. Additional tab options will appear to provide quick access to other settings for nodes sorted by category.

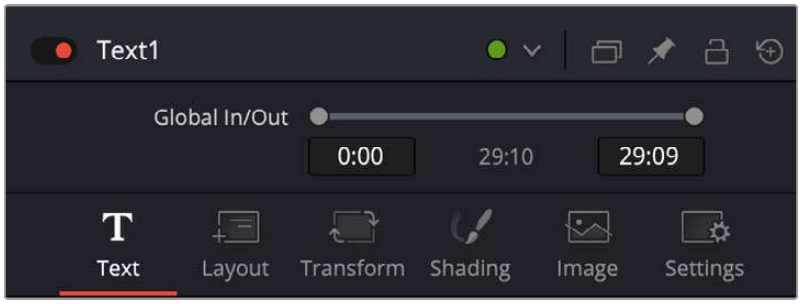

The text inspector contains additional tabs for text, layout, transform, shading, image and settings.

Getting Started with Fusion

To get started with Fusion, simply position your playhead over any clip on your timeline and click on the 'Fusion' tab to open the Fusion page.

On the Fusion page, your clip is immediately available in a media input node labelled 'MediaIn'. Every composition will begin with a 'mediain' and a 'mediaout' node. This mediain node represents the top most clip of your timeline at the playhead, and ignores any clips underneath. Any adjustments you've applied to the clip on the edit page, such as transform tools and cropping changes, are also included.

The media output node, named 'MediaOut', is the node that sends the output back to your timeline on DaVinci Resolve's edit page.

TIP ResolveFX or OFX plug-ins applied to clips in the cut or edit pages are not applied in the Fusion page. This is because Fusion effects occur prior to color correction and OFX/ResolveFX processing. If you want OFX applied before Fusion effects, right click the clip in the edit page and select 'new fusion clip' before clicking on the Fusion page.

Understanding Nodes

It can be helpful to think of each node as a visual icon representing a single tool or effect. Nodes are connected to other nodes to build the overall composition, much like ingredients in a cake. It's important to understand the inputs and outputs of each node as this will help you navigate the flow of your composition while building detailed visual effects.

Some tools have multiple inputs and outputs you can connect to other nodes. The merge node, for example, lets you attach a foreground input, background input, and a mask input for mattes or keys.

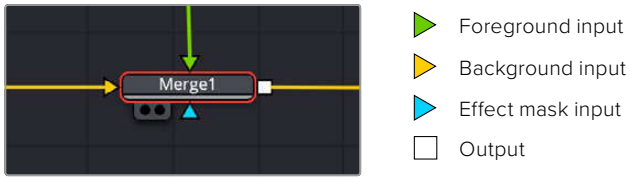

Multiple outputs on nodes means a single node can connect to many different nodes in your composition, so you don't have to duplicate clips as you would in layer based software. Arrows on the line between connected nodes are a great visual indicator to show you which direction the image data is flowing.

Adding Nodes to the Node Editor

Adding effects is as simple as placing nodes on the line between the 'mediain' and 'mediaout' nodes.

There are a few ways you can do this. You can hold down the shift button and drop a node between two nodes, or click on the node you want to attach an effect to and select the tool you want to add. The new node will automatically connect to the tool selected. You can also add a node anywhere on the node window and manually connect nodes by dragging the output of one to the input on another.

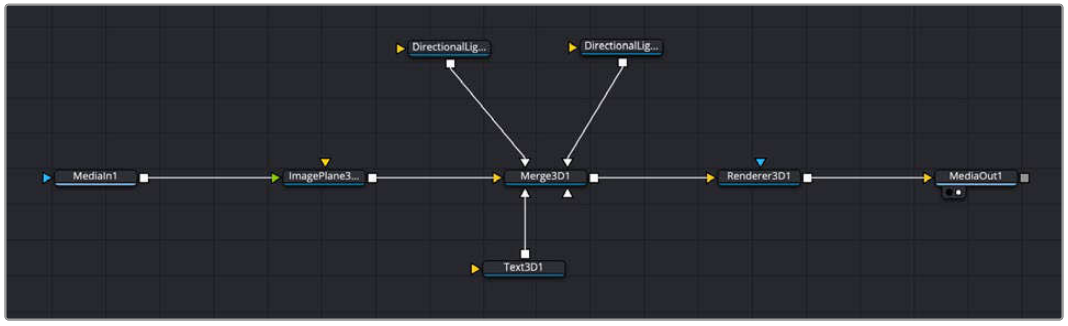

The most commonly used tool is the 2D or 3D merge node. This node is like a central hub that combines tools on the node editor into a single output.

The merge node has controls for how the inputs are managed, including settings for size, position, and blend. These settings are all accessible in the inspector panel when the merge node is selected.

The toolbar above the node panel contains the most commonly used tools as icons that you can either click on to add the node, or drag the tool to the node panel. If you want to see all the complete tools available, click on the 'effects library' in the top left corner and expand the 'tools' option. Here you'll find all the tools sorted by category, as well as a set of pre-built 'templates' you can use, for example lens flares, shaders and backgrounds.

TIP Once you're familiar with the tool names, you can hold down 'shift' and press 'spacebar' on your keyboard and a 'select tools' menu will appear. As you type the tool name, the menu will suggest the relevant tool. This is a very fast way to select the tool you want.

Adjusting Nodes Using the Inspector Panel

Adjust your node settings using the inspector panel. Simply click on the node you want to modify and the panel will update to display its settings and controls.

With Fusion, you don't have to be viewing the node you're editing, as you can modify one node while viewing another in your composition. For example, you can modify the size and center position of a 'text+' node while the merge node is in the viewer, letting you view the text relative to the background.

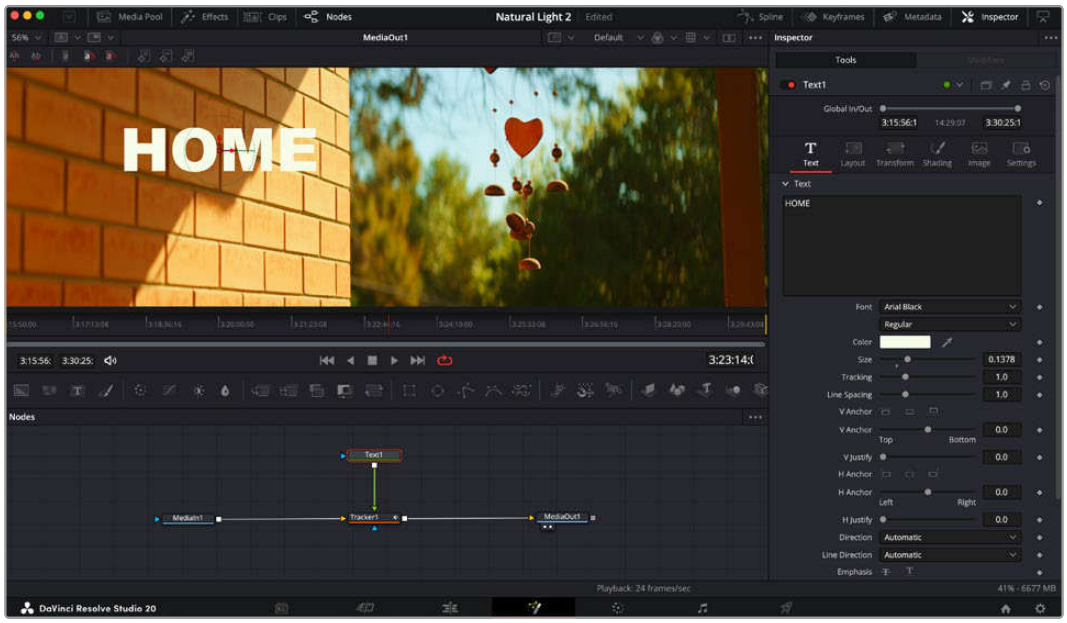

Selected nodes appear with a red border. Here the inspector panel is displaying the layout tab controls for the text node.

There are different parameters and settings you can adjust for every node depending on its task, from sizing and center positions to changing the number of particles in an emitter node. Setting keyframes and changing the settings over time will animate the effect.

Working with Keyframes

In the inspector window, set a keyframe by right clicking on a setting and choosing 'animate' from the contextual menu. The keyframe icon to the right of the setting will turn red. This means keyframes are now active and any changes you make will be applied to the current frame only. When two or more keyframes are created by changing the setting parameters on a different frame, a transition is interpolated between them. Arrows on each side of the keyframe icon let you move the playhead to those exact positions on the timeline.

Here, the 'size' keyframe animation has been smoothed into a bezier curve. You can click the bezier handles to shorten or lengthen the curve, or the keyframe square icons to move the keyframe location.

The splines panel gives you further control over keyframe animation. You can select keyframes, such as the first and last, and smooth the animation between them into a bezier curve by typing 'shift' + 's', or right clicking on a keyframe and selecting 'smooth'.

Using the Motion Tracker and Adding Text

To get a better idea of how to use Fusion, we have included the following examples to show how to use the tracker tool to track an element in a clip, plus add text and attach it to the element using the tracking data.

The 'tracker' tool tracks pixels over time on the x & y axis, and generates data you can use to attach other elements. This is great for when you want to match the position of text to a moving object, such as a car driving along the road, or a bird as it flies across frame.

1. In the 'effects library', select the 'tracker' tool and drag it to the line between the 'mediain' and the 'mediaout' nodes. Now click the tracker node to reveal its properties in the inspector.
2. Type '1' on your keyboard to see the 'tracker' node on the left viewer. The clip will appear in the viewer together with the tracker at its default position. Hover your mouse pointer over the tracker to reveal the tracker handle. Click on the tracker handle at the top left corner and drag the tracker to an area of interest on your clip. High contrast areas work well, for example the badge on the hood of a car. The tracker will magnify the image area for extra precision.

3 In the inspector window, click on the ‘track forward’ button to start tracking. A notification window will appear when the tracking is done. Click OK.

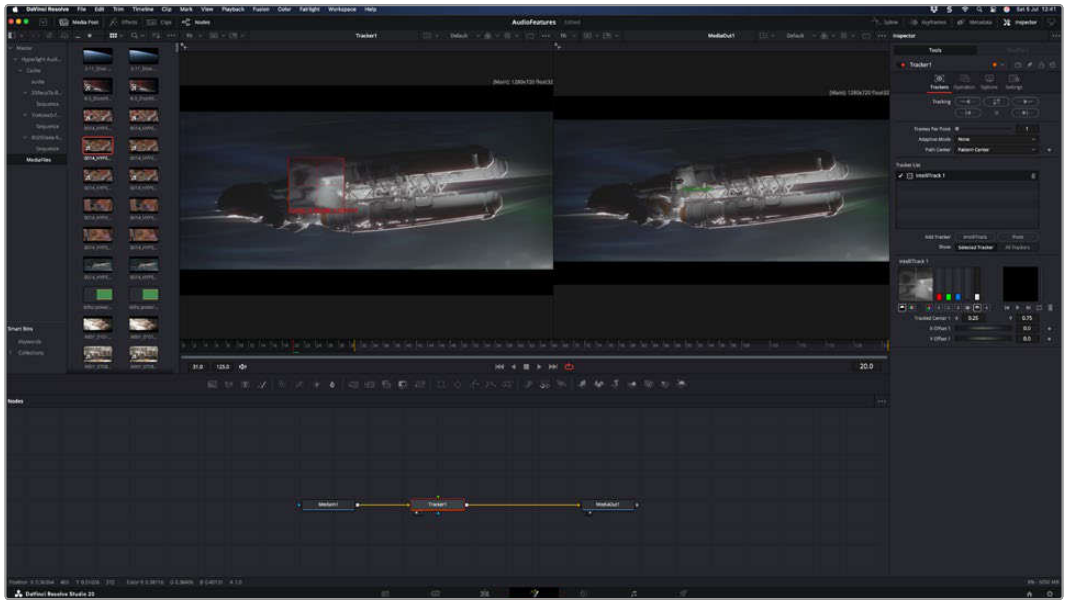

Tracking options in the inspector panel include track reverse from last frame or current frame, stop track or track forward from current frame or first frame.

TIP Track reverse or forward from current frame is great for situations where your area of interest disappears during the render range, such as a car or bird moving out of frame. This lets you track only the relevant footage.

Now you can take that tracking data and apply the motion path to a text tool.

4 Click on the ‘text+’ node icon from the toolbar of commonly used nodes and drag it to the node panel near the ‘tracker’ node. Connect the ‘text’ output square to the green foreground input on the ‘tracker’.

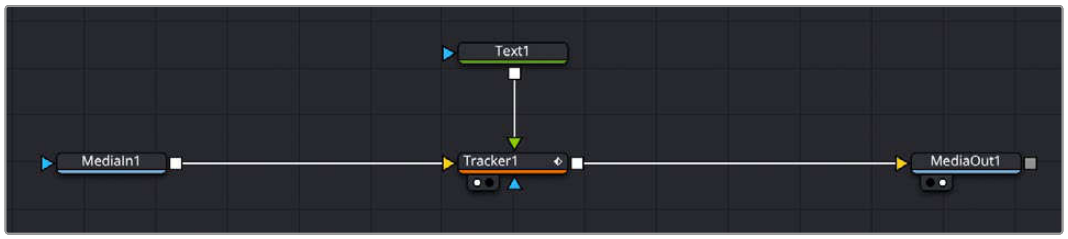

5 Click on the ‘tracker’ node and type ‘1’ so you can see the merged results on your left hand viewer. In the ‘tracker’ inspector panel, click on the ‘operations’ tab. Click the menu next to operation and select ‘match move’.

6 Click the ‘text’ node to reveal the properties in the inspector. Type your text into the text box and change the font, color and size to suit your composition.

This will apply the tracking position data from your tracker to your text. If you want to change the text offset, click on the ‘trackers’ tab back in the inspector panel and use the x and y offset scroll wheels to modify the position.

Scroll wheels at the bottom of the tracker inspector panel let you adjust the offset position for the text.

Now you can play back your composition and see your text attached to the object you have tracked!

The green square is the tracker's current position along the green path, and the red dashed line is the offset position used to animate the text.

For some shots you might want to remove track points after tracking, such as when the object you are tracking disappears off the screen. The keyframe editor makes this a very simple process.

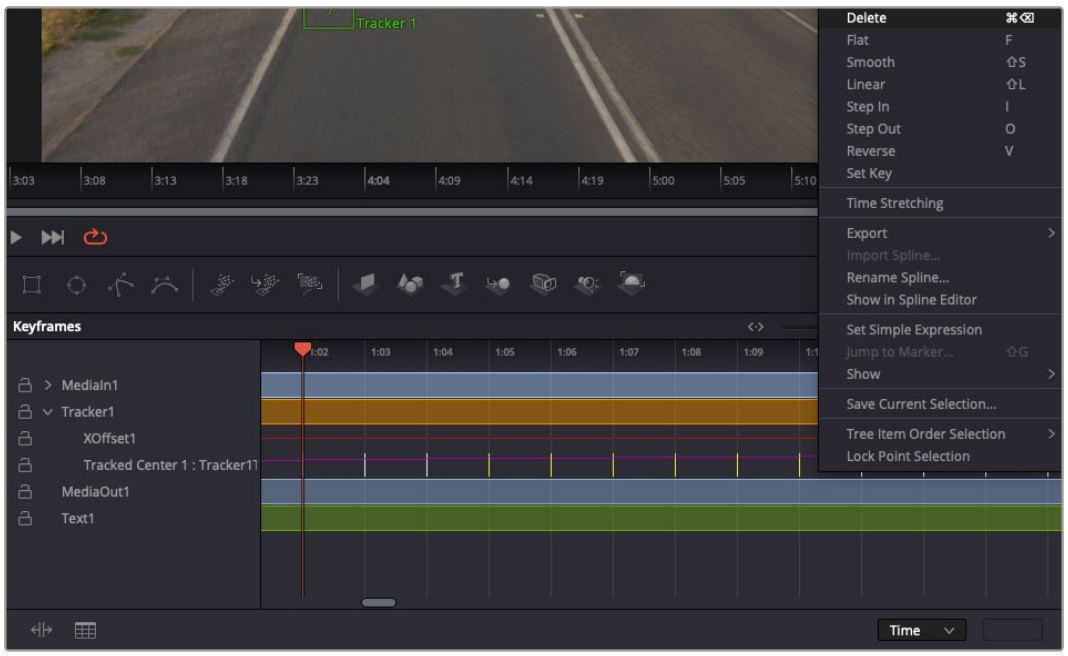

7 Click on the keyframes tab above the inspector to open the keyframes editor. Any nodes with keyframes applied will have a small arrow next to the node label, and only the parameter with keyframes added will appear in the list below. Click on the magnify icon and drag a box around the area you want to edit. This will zoom into that area so you can see the keyframes easier.

8 Move the playhead to the location of the last keyframe you want. Now select the keyframes you wish to remove by drawing a box around them with your mouse. The keyframes will highlight yellow. Right click and choose delete from the menu.

TIP If your effects are particularly system intensive, right clicking on the transport controls area will give you viewer options, including proxy playback, helping you get the most out of your system while you build your composition. Refer to the DaVinci Resolve manual for further detail on all the playback options.

You have now completed your first composition animating text to match a movement in your footage!

If you want to track an area of the image that contains a flat surface you want to enhance or replace, you can use the planar tracker. Tracking 2D planes can be helpful for changing labels and signs in a moving image, or even adding an image to a monitor or TV in your shot.

For more information about the planar tracker and the many powerful tools in the DaVinci Resolve Fusion page, see the DaVinci Resolve manual.

TIP As you build visual effects in the Fusion page, it's worth noting if the effect you are building is a 2D effect, or a 3D effect, as this will determine which merge tool is used. You may discover yourself frequently combining 2D and 3D effects in the one composite. In this scenario, it's helpful to remember that any visual effect using the 3D space needs to be rendered as a 2D image before it can be merged into a 2D composite.

We believe you will have lots of fun with Fusion and exploring Fusion's visual effects with the power of DaVinci Resolve's edit, color, and Fairlight pages. With all these tools at your finger tips, DaVinci Resolve is incredibly powerful and there is really no limit to what you can create!

Mastering Your Edit

Now you've edited, graded, added vfx and mixed your audio, you'll want to share it with others. You can use the Quick Export button, or menu selection, to output the contents of the Timeline as a self contained file in one of a variety of different formats, or use the additional features of the 'deliver' page.

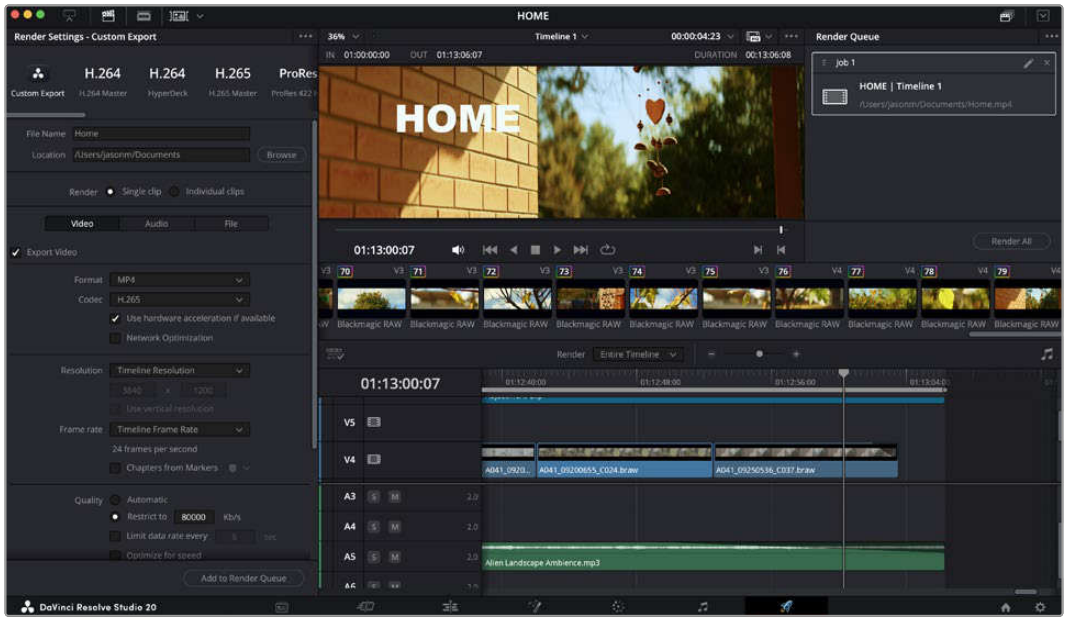

The 'deliver' page is where you export your edit. You can select from many different video formats and codecs

Quick Export

You can choose File > Quick Export to use one of a variety of export presets to export your program from any page of DaVinci Resolve. You can even use quick export to export and upload your program to one of the supported video sharing services, including YouTube, Vimeo, Twitter and Frame.io.

To use Quick Export:

1. In the 'cut', 'edit', fusion' or 'color' page, optionally set in and out points in the timeline to choose a range of the current program to export. If no timeline in or out points have been set, the entire timeline will be exported.

   Choose File > Quick Export.

2. Select a preset to use from the top row of icons in the quick export dialog, and click 'export'.

3 Choose a directory location and enter a file name using the export dialog, then click 'save'. A progress bar dialog appears to let you know how long the export will take.

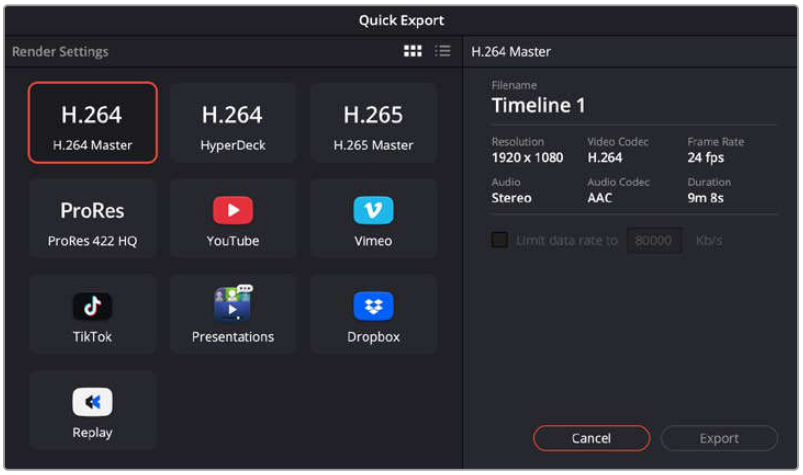

The quick export dialog

The Deliver Page

This page lets you select the range of clips you want to export, plus the format, codec and resolution you want. You can export in many types of formats such as QuickTime, AVI, MXF and DPX using codecs such as 8-bit or 10-bit uncompressed RGB/YUV, ProRes, DNxHD, H.264 and more.

To export a single clip of your edit:

1 Click on the 'deliver' tab to open the deliver page.

2 Go to the 'render settings' window on the top left of the page. Choose from a number of export presets, for example YouTube, Vimeo and audio presets, or you can set your own export settings manually by leaving it set to the default 'custom' preset and entering your own parameters. For this example, select YouTube, then click on the arrow next to the preset and select the 1080p video format.

   The frame rate will be locked to your project frame rate setting.

3 Underneath the presets you will see the timeline filename and the target location for your exported video. Click the 'browse' button and choose the location where you want to save your exported file and then select 'single clip' from the render option.

4 Immediately above the timeline, you'll see an options box with 'entire timeline' selected. This will export the entire timeline, however you can select a range of the timeline if you want to. Simply choose 'in/out range' and then use the 'i' and 'o' hot key shortcuts to choose the in and out points in your timeline.

5 Go to the bottom of the 'render settings' and click on the 'add to render queue' button.

   Your render settings will be added to the render queue on the right side of the page. Now all you have to do is click 'start render' and monitor the progress of your render in the render queue.

   When your render is complete you can open the folder location, double click on your new rendered clip and watch your finished edit.

Now that you have a basic knowledge of how to edit, color, mix audio and add visual effects, we recommend experimenting with DaVinci Resolve. Refer to the DaVinci Resolve manual for more details on how each feature can help you make the most of your project!

Blackmagic Camera Setup

How to Update Your Camera Software on Mac OS

After downloading the latest Blackmagic Camera Update software from the Blackmagic Design support center, unzip the downloaded file and double click on the .dmg disk image file. Launch the 'Install Cameras' installer and follow the onscreen instructions.

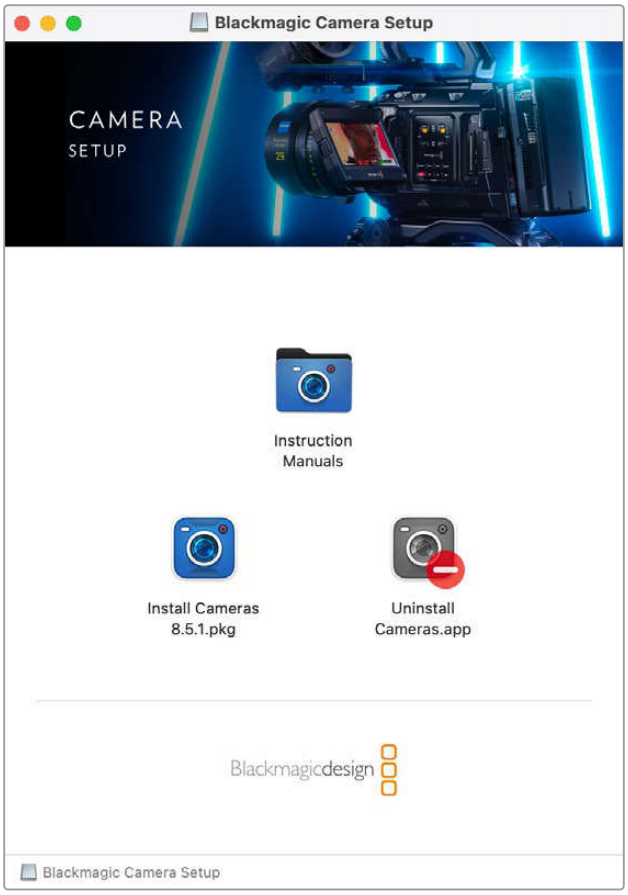

How to Update Your Camera Software on Windows

After downloading the 'Blackmagic Camera Setup' software and unzipping the downloaded file, you should see a 'Blackmagic Camera Setup' installer window. Double click on the installer icon and follow the onscreen prompts to complete the installation.

After the installation is complete, click on the Windows 'start' menu, and go to 'all programs'. Click on the Blackmagic Design folder to open the Blackmagic Camera setup software and instruction manuals.

How to Update your Camera's Internal Software

After installing the latest Blackmagic Camera Setup utility on your computer, connect a USB cable between the computer and your Blackmagic URSA Broadcast G2. The USB port is located on the left side panel above the memory card slots.

Power your camera, launch 'Blackmagic Camera Setup' and follow any on screen prompt to update the camera software. It's important to note that updating your camera software erases any presets and custom LUTs, and resets all settings. It is a good practice to export them to a memory card as a backup before performing a software update. After a software update, you can restore your presets and LUTs quickly by importing them from the memory card.

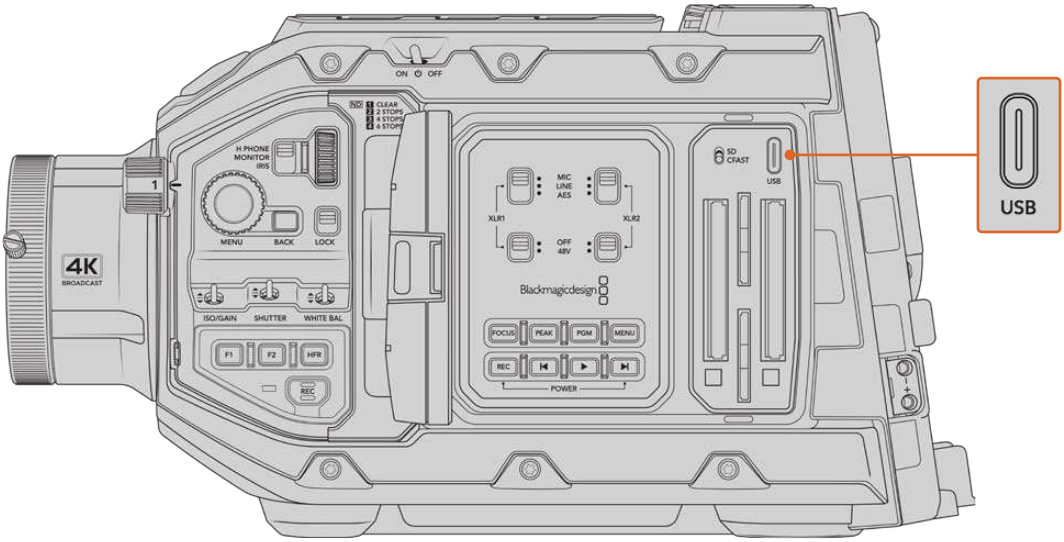

The USB-C port is used to update the camera software and can be found above the memory card slots, next to the media selection switch on Blackmagic URSA Broadcast G2

Using Blackmagic Camera Setup

Blackmagic Camera Setup is used to change settings and update the internal software in your camera.

To use Blackmagic Camera Setup:

1 Connect your Blackmagic URSA Broadcast G2 to your computer via USB or Ethernet.

2 Launch Blackmagic Camera Setup. Your camera will be named in the setup utility home page.

3 Click on the circular 'setup' icon or the image of your camera to open the setup page.

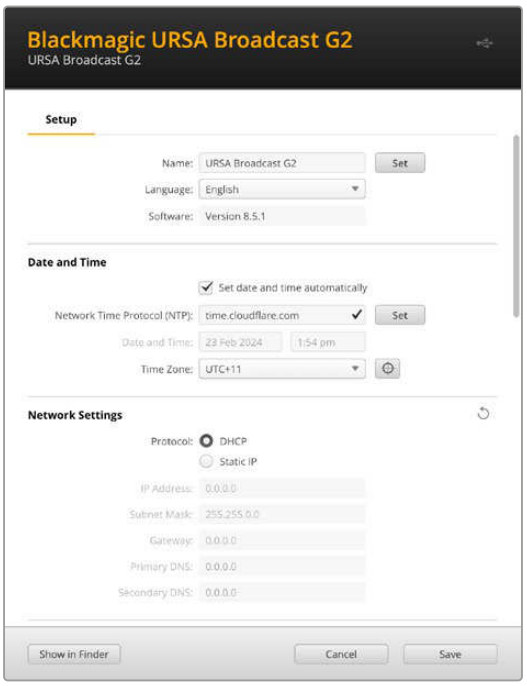

Setup

If you have more than one URSA Broadcast G2, you may wish to give each unit a discrete name to make them easy to identify. You can do this by entering a new name into the name field and clicking the 'set' button. It's worth noting that changing the name of the camera will invalidate any digital certificates in use, so it's worth changing the name before generating a certificate signing request or self signed certificate. More details on digital certificates is available in the 'secure certificate' information later in this section of the manual.

Date and Time

Set your date and time automatically by ticking the 'set date and time automatically' checkbox. When this checkbox is enabled, your camera will use the network time protocol server set in the NTP field. The default NTP server is time.cloudflare.com, but you can also manually enter an alternate NTP server and then click on 'set'.

If you are entering your date and time manually, use the fields to enter your date, time and time zone. Setting the date and time correctly ensures your recorded clips have the same time and date information as your network and also prevents conflicts that can occur with some network storage systems.

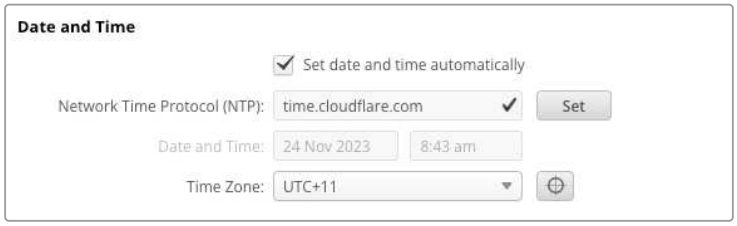

Network Settings

Protocol

To control your camera remotely via Ethernet, or when connected to ATEM Television Studio HD8 ISO as a remote source on your network, the camera needs to be on the same network as your other equipment using DHCP or by manually adding a fixed IP address.

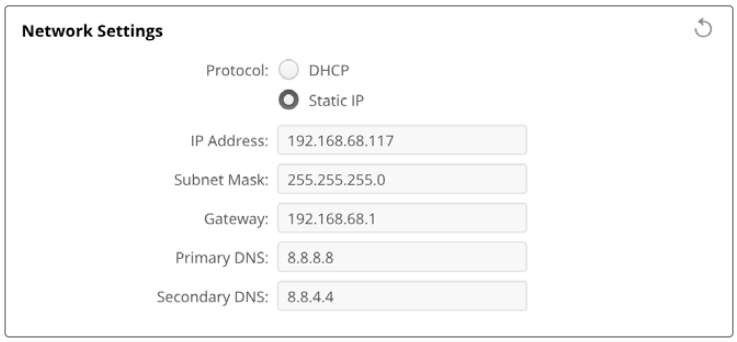

DHCP	Your camera is set to DHCP by default. The dynamic host configuration protocol, or DHCP, is a service on network servers that automatically finds your camera and assigns an IP address. The DHCP is a great service that makes it easy to connect equipment via Ethernet and ensure their IP addresses do not conflict with each other. Most computers and network switchers support DHCP.
Static IP	When 'static ip' is selected, you can enter your network details manually. When setting IP addresses manually so all units can communicate, they must share the same subnet mask and gateway settings. If there are other devices on the network that have the same identifying number in their IP address, there will be a conflict and the units won't connect. If you encounter a conflict, simply change the identifying number in the unit's IP address.

Network Access

Your URSA Broadcast G2 can be accessed via a network for transferring files. Access will be disabled by default, but you can choose to enable individually or via a username and password for added security when using the web manager.

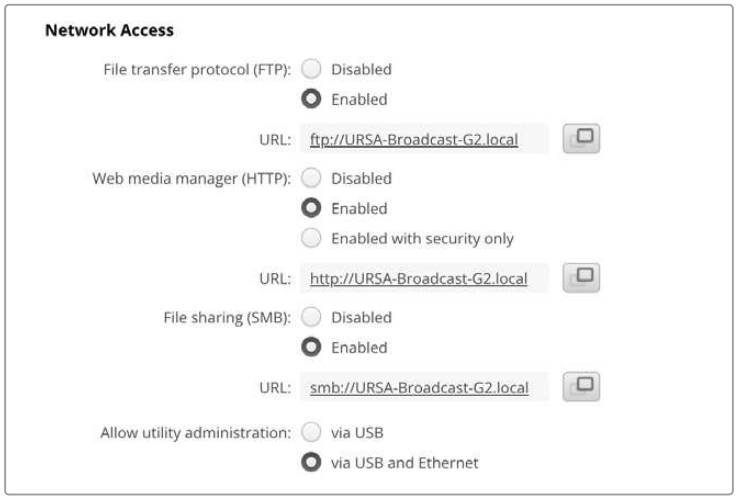

File Transfer Protocol

Enable or disable access via FTP using the checkbox. If you are supplying access via an FTP client such as CyberDuck, click the icon to copy the FTP address. For more information, refer to the section 'transferring files over a network'.

File Sharing

At the bottom left corner you will notice a button named 'Show in Finder' on a Mac or 'Show in Explorer' on Windows. This button lets you access your media files using your computer's file browser. All you need to do is enable 'file sharing' and then click on the 'show in Finder' button. You can also copy the URL and paste the file path into your browser.

Your operating system may prompt you to allow access to the drive.

Web Media Manager

Enabling web media manager lets you download clips from your camera's media storage over your network, or even delete unwanted clips if you need to free up disk space. When you click on the link or copy and paste it into your web browser a simple interface will open where you can access the media.

Enable access via HTTP by selecting the 'enabled' checkbox. You can also set up a secure certificate using the 'enabled with security only' option. When using a digital certificate, connections to web media manager are encrypted via HTTPS. More information on digital certificates is available in the 'secure certificate' section.

REST API also uses HTTP and this means enabling access to media via the web media manager also enables camera control via REST API.

Allow Utility Administration

Blackmagic Camera Setup can be accessed when your camera is connected via the network or via USB. To prevent users having access via the network, select 'via USB'.

Secure Login Settings

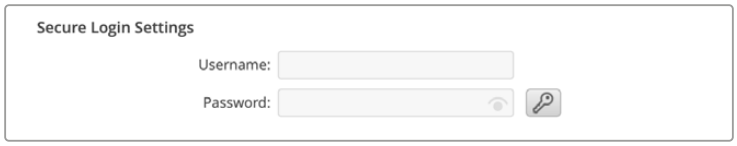

If you have selected 'enabled with security' for web media manager access you will need to enter a username and password. Type a username and password and click 'save'.
The password field will appear empty once a password is entered. Once a username and password is set, you will need to enter it when accessing the web media manager.

Secure Certificate

To enable web media manager access via HTTPS, you will require a secure certificate. This digital certificate acts as an identification card for your URSA Broadcast G2 so that any incoming connections can confirm they are connecting to the correct unit. Along with confirming the identity of the unit, using a secure certificate ensures data transmitted between your camera and a computer or server will be encrypted. When using the secure login settings the connection will not only be encrypted but require authentication for access.

There are two certificate types you can use with your camera. A secure certificate signed by a certificate authority, or a self signed certificate. A self signed certificate may be secure enough for some user workflows, for instance only accessing the camera via a local network.

To generate a self signed certificate click on 'create certificate'. You will be prompted to confirm you understand the risks with using a self signed certificate. Once you click on 'create', the certificate details will autofill the 'domain', 'issuer' and 'valid until' fields in the Camera Setup utility.

Following a factory reset any current certificate will be deleted, but you can also remove it at any time by clicking on the 'remove' button and following the prompts.

When using a self signed certificate to access media files using HTTPS, your web browser will alert you to the risks of accessing the site. Some browsers will allow you to proceed once you confirm you understand the risks, however other web browsers may prevent you from proceeding at all.

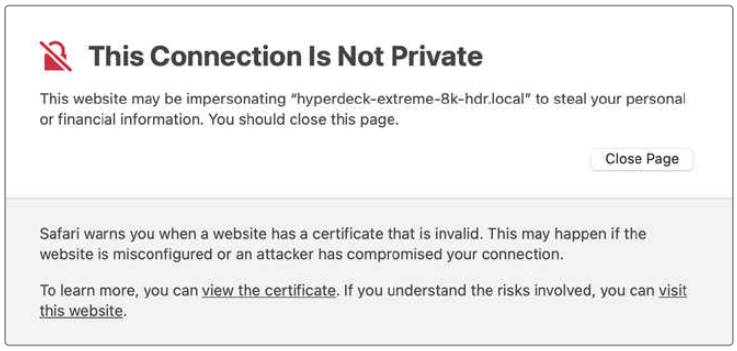

To ensure access is granted to any web browser, you will need to use a signed certificate. To obtain a signed certificate, you first need to generate a certificate signing request, or CSR, using Blackmagic Camera Setup utility. This signing request is then sent to a certificate authority, also known as a CA, or your IT department to be signed. Once completed, a signed certificate with a .cert, .crt or .pem file extension will be returned which you can import into your camera.

To generate the certificate signing request CSR:

1 Click on the 'generate signing request' button.

2 A window will appear prompting you to enter a common name and subject alternative name for your camera. Adjust any other details as required using the table below.

Information	Description	Example
Common Name	The domain name you will use	studiocamera.melbourne.com
Subject Alternative Name	An alternate domain name	studiocamera.melbourne.net
Country	Country for your organization	AU
State	Province, region, county or state	Victoria
Location	Town, city, village etc. name	South Melbourne
Organization Name	Name of your organization	Blackmagic Design

3 Once you have filled in the certificate details, press 'generate'.

When you generate a .csr you will also be creating a public key and private key at the same time. The public key will be included with the signing request while the private key will remain with the unit. Once the CA or IT department have verified the information in the CSR with your organization, they will generate a signed certificate with the above details along with your public key.

Once imported, your camera will use the public and private key to confirm the identity of the camera and to encrypt and decrypt data share via HTTPS.

Importing a signed certificate:

1 Click on 'import signed certificate'.

2 Navigate to the location of the signed certificate using the file browser and once the file is selected click on 'open'.

The domain, issuer and valid until fields will update with the information from your CA. Generally, a signed certificate will be valid for about a year so the process will need to be repeated as you reach the expiration date.

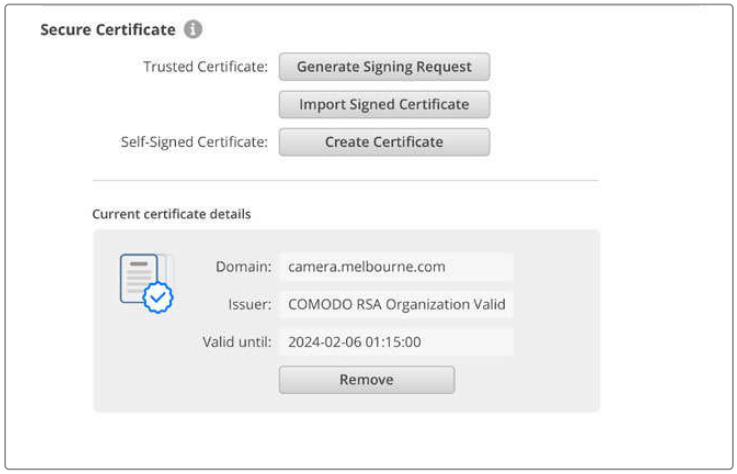

Since a domain name was selected, you will need to speak to your IT department about resolving the DNS entry for your URSA Broadcast G2. This will point all traffic for the IP address of the camera to the selected domain address in the signing request. This will also be the HTTPS address you use to access files via the web media manager, for example https://camera.melbourne

It's worth noting that the certificate will be invalidated following a factory reset and a new certificate will need to be generated and signed.

Reset

Select 'factory reset' to restore your camera to factory settings. A factory reset will invalidate the current certificate. If a secure certificate is being used you will need to generate a new certificate signing request to be signed by a certificate authority or IT department.

Transferring Files over a Network

When connected to a network via a USB-C to Ethernet adapter, Blackmagic URSA Broadcast G2 can transfer files using the following protocols.

HTTP

Hypertext transfer protocol.

HTTPS

Hypertext transfer protocol secure.

FTP

File transfer protocol.

SMB

Server message block.

These protocol options let you copy files directly from your camera's storage media to your computer via a network with the fast speeds a local network can provide. For example, you can copy clips and start editing them as soon as you have finished recording.

Access to your URSA Broadcast G2 via any of these protocols can be enabled or disabled via the Camera Setup utility. For example, you could disable FTP access and enable HTTPS access at the same time.

Connecting to your Camera via HTTPS

To access your camera via the web media manager you will need the URL available via the network access settings. Network access settings appear in Camera Setup utility when your computer is connected via USB or Ethernet but are disabled when only Ethernet is connected.

1. Using a USB-C cable, connect your computer to Blackmagic URSA Broadcast G2 via the USB port on the left panel and open Camera Setup. You should see a USB connection icon next to the unit name. Click on the circular icon or anywhere on the product image to open the settings.
2. When using a self signed certificate, navigate to the network access settings and click on the copy icon beside the URL. This URL is based on the name of your camera. To modify the URL, modify the name of the unit.

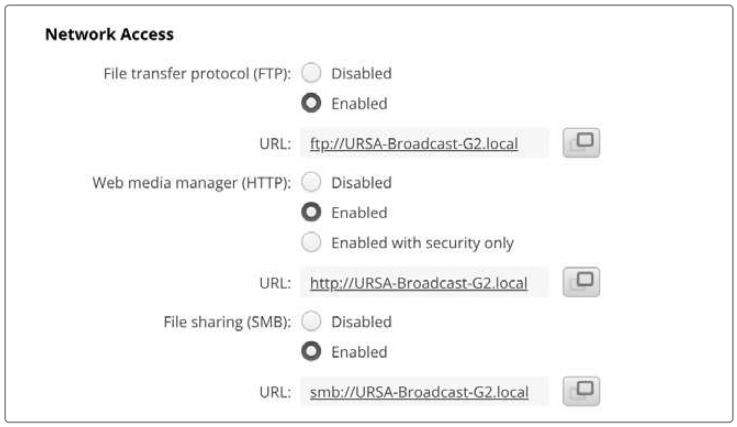

When using a self signed certificate, click on the link

3 If you have imported a certificate signed by a CA or IT department, copy and paste the address in the domain field for the current certificate.

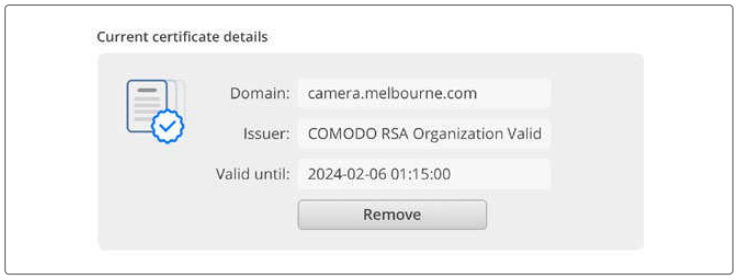

Copy the domain address and paste into a browser

4 Open your web browser and paste the address into a new window. If you have enabled access with security only you will be prompted to enter the username and password set in Camera Setup.

When using a self signed certificate, a browser warning will appear regarding the privacy of the connection. This means a trusted signed certificate has not been imported via the Camera Setup utility

To continue without a valid and trusted certificate, follow your browser prompts to acknowledge the risks and proceed to the website.

Transferring Files Using Web Media Manager

When you first open the web media manager browser view you will see a list of the storage media connected to your camera.

Double click a media folder to reveal the contents.

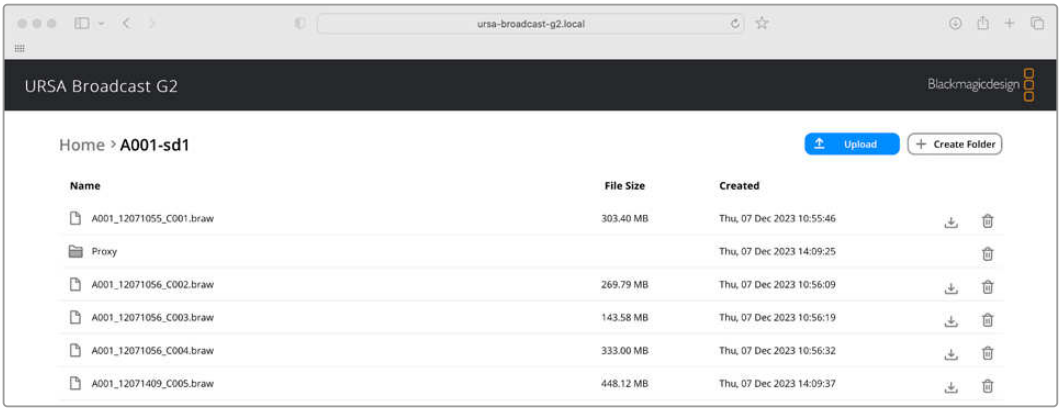

Click the download button to download files or the trash icon to delete them

To download files, use the arrow icon on the far right. Your browser may prompt you to allow downloads from the site. Click on ‘allow’. To delete a file, click the trash can icon and a delete file window will appear. Click ‘delete’ to proceed.

Transferring Files via FTP

With your computer and Blackmagic URSA Broadcast G2 on the same network, all you need is an ftp client and your camera's IP address or the FTP URL in the Camera Setup utility.

1 Download and install an FTP client on the computer you want to connect your camera to. We recommend Cyberduck, FileZilla or Transmit but most FTP applications will work. Cyberduck and FileZilla are free downloads.

2 With your Blackmagic URSA Broadcast G2 connected to your network, open Camera Setup and click on URL or press the copy icon to paste it manually. You may need to click the link a second time if the FTP program doesn't open a connection.

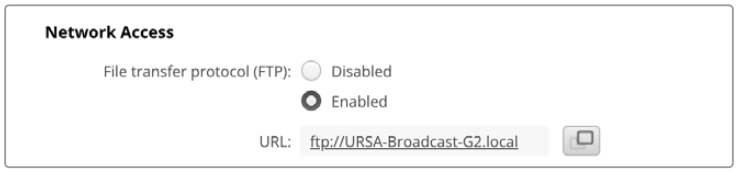

3 If you are manually opening an FTP connection, paste the URL into the client's server field. Check 'anonymous login' if available.

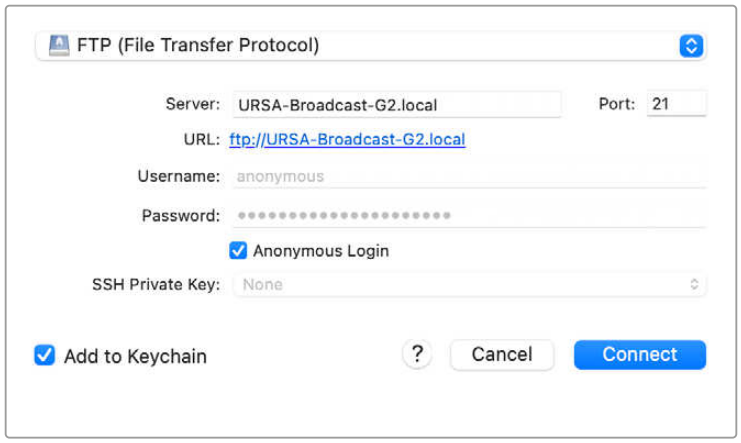

4 Expand a media storage folder from the list to view your recorded clips. You can now drag and drop files using the FTP interface.

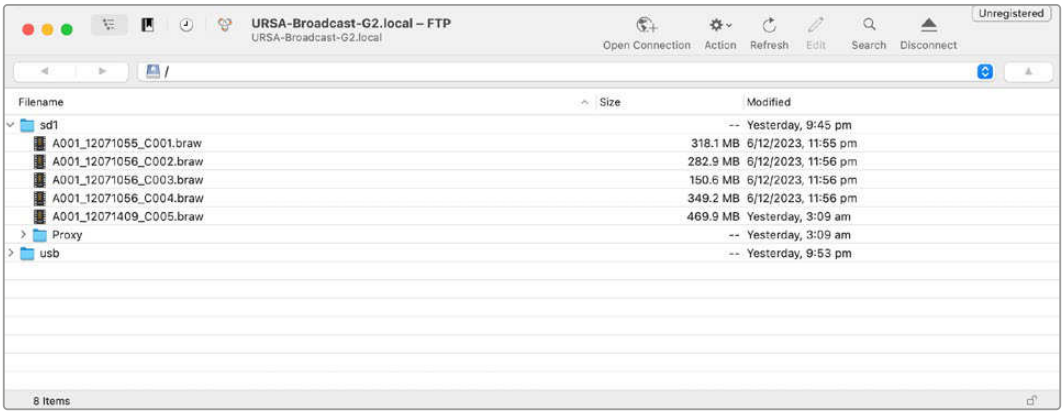

Working with Third Party Software

To edit your clips using your favorite editing software, you can copy your clips to an internal or external drive or RAID and then import your clips into the software. Or import your clips directly from your storage media using a dock or adapter for your CFast or SD card or SSD.

NOTE Blackmagic RAW is supported on URSA Broadcast G2 with DaVinci Resolve 16.1.2 and later and has also been adopted by a wide range of third party post-production editing programs. Plugins for editing Blackmagic RAW in Avid Media Composer and Adobe Premiere Pro are available with Blackmagic RAW software, which you can download from www.blackmagicdesign.com/support.

Working with Files from CFast 2.0 and SD cards

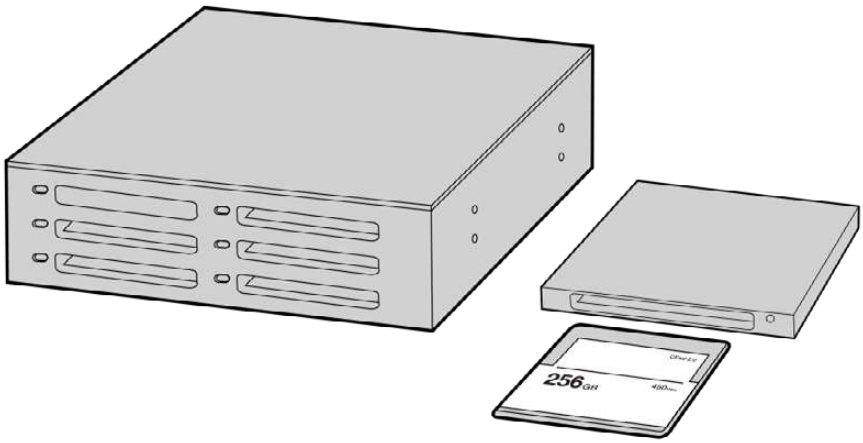

Edit directly from your CFast card by removing it from your camera and mounting it on your computer using a CFast 2.0 reader/writer or CFast drive

To import your clips from a CFast 2.0 or SD card:

1. Remove the CFast card or SD card your Blackmagic URSA Broadcast G2.

   Mount the card to your Mac or Windows computer using a card reader.

2. Navigate to the card on your operating system to open it and you will see your list of Blackmagic RAW or QuickTime movie files.

3. Now you can simply drag the files you want from the card onto your desktop or another hard drive, or you can access the files straight from the card using your editing software.

4. Before you unplug the CFast or SD card from your computer, it is important to always eject your CFast or SD card from either Mac OS or Windows. Removing your card without ejecting can corrupt footage in some cases.

Working with Files from SSDs

To import your clips from a SSD:

1. Remove the SSD from URSA Mini Recorder.
2. You can mount the SSD to your Mac or Windows computer using either an eSATA or Thunderbolt dock, for example Blackmagic MultiDock. You can also use an eSATA to USB adapter cable to plug the SSD straight into a USB port on your computer. USB 3.0 is preferable as USB 2.0 is not fast enough to edit video in real time.
3. Double click on the SSD to open it and you should see a list of QuickTime movie files or Blackmagic RAW files. Depending on the format you chose to record in, you might have a mixture of files, but they will all use the same naming convention.
4. Now you can simply drag the files you want from the SSD onto your desktop or another hard drive, or you can access the files straight from the SSD using your NLE software.
5. Before you unplug the SSD from your computer, it is important to eject the SSD safely from your computer first.

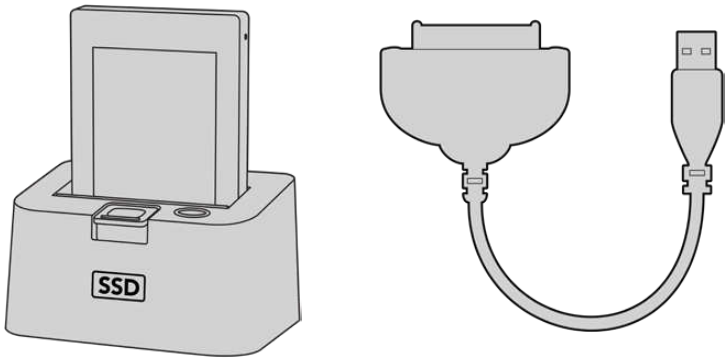

Edit directly from the SSD by removing it from your camera and mounting it on your computer using an eSATA Thunderbolt dock or USB 3.0 docking cable.

Using Final Cut Pro X

To edit your clips using Final Cut Pro X, create a new project and set a suitable video format and frame rate. This example uses ProRes 422 HQ 1080p24.

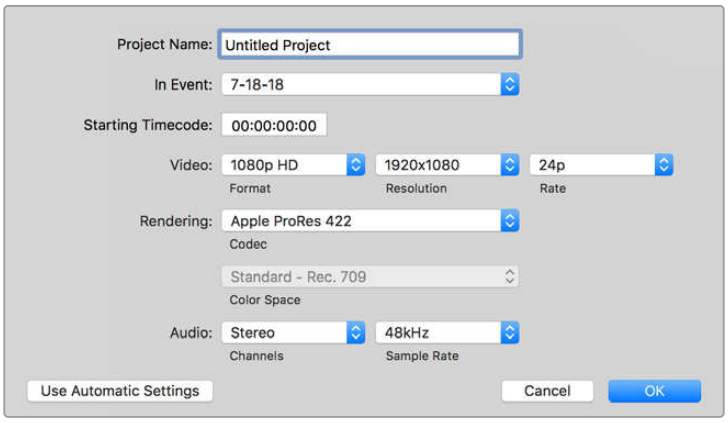

Final Cut Pro X project settings

1 Launch Final Cut Pro X, go to the 'menu' bar and select 'file/new project'. A window will open containing project settings.

2 Name your project and select the 'custom' checkbox.

3 Set the 'video properties' settings to 1080p HD, 1920x1080 and 24p.

4 Set your 'audio' and 'render properties' settings to 'stereo, 48kHz, and Apple ProRes 422 HQ'

5 Click OK.

To import your clips into your project, go to the 'menu' bar and select 'file/import/media'. Choose your clips from your CFast card.

You can now drag your clips onto the timeline for editing.

Using Avid Media Composer 2018

To edit your clips using Avid Media Composer 2018, create a new project and set a suitable video format and frame rate. For this example, clips are set using 1080p24.

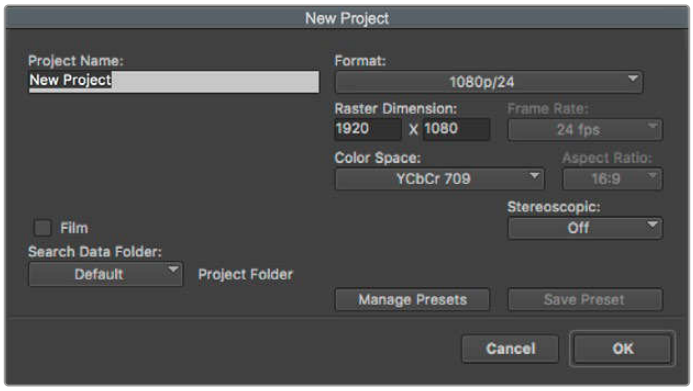

Setting the project name and project options in Avid Media Composer 2018

1 Launch Avid Media Composer 2018 and the 'select project' window will appear.

2 Click the 'new project' button and name your project in the 'new project' window.

3 In the 'format' drop down menu select HD 1080 > 1080p/24 and click 'ok' to create the project.

4 Double click the project in the 'select project' window to open it.

5 Select file > input > source browser and navigate to the files you wish to import.

6 Select your 'target bin' from the drop down menu and click 'import'.

When the clips appear within the media bin you can drag your clips onto the timeline and begin editing.

Using Adobe Premiere Pro CC

To edit your Apple ProRes 422 HQ clips using Adobe Premiere Pro CC, create a new project and set a suitable video format and frame rate. For this example, clips are set using ProRes 422 HQ 1080p25.

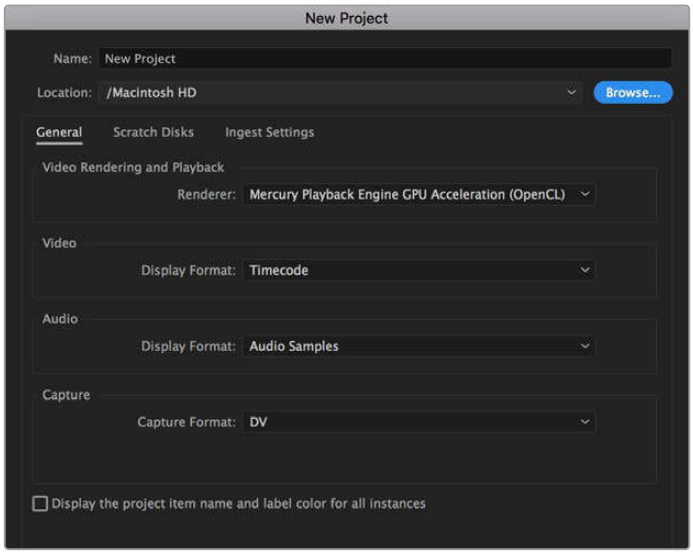

Setting the project name and project options in Adobe Premiere Pro CC

1. Launch Adobe Premiere Pro CC. In the 'welcome' window select 'new project'. A window will open containing project settings.
2. Name your project. Choose the location for your project by clicking 'browse' and selecting your desired folder. Once you've selected your location folder click OK in the 'new project' window.
3. Go to the Adobe Premiere Pro CC 'menu' bar, select 'file/import' and choose the clips you want to edit. Your clips will appear in the project window.
4. Drag the first clip you wish to edit onto the 'new item' icon at the bottom right of the project window. A new sequence will be created matching your clip settings.

You can now drag your clips onto the sequence timeline for editing.

Developer Information

Camera Control REST API

If you are a software developer you can build custom applications or leverage ready to use tools such as REST client or Postman to seamlessly control and interact with your compatible Blackmagic camera using Camera Control REST API. This API enables you to perform a wide range of operations, such as starting or stopping recordings, accessing disk information and much more. Whether you're developing a custom application tailored to your specific needs or utilizing existing tools, this API empowers you to unlock the full potential of your Blackmagic camera with ease. We look forward to seeing what you come up with!

NOTE It's important to mention that controlling Blackmagic cameras via REST API relies on the web manager being enabled on each compatible Blackmagic camera. Enable the web media manager in the Blackmagic Camera Setup 'network access' settings for each camera you are controlling.

The following Blackmagic cameras are compatible with Camera Control REST API:

▪ Blackmagic PYXIS 6K	▪ Blackmagic PYXIS 12K
▪ Blackmagic Cinema Camera 6K	
▪ Blackmagic URSA Cine 12K LF	▪ Blackmagic URSA Cine 17K 65
▪ Blackmagic URSA Cine Immersive	
▪ Blackmagic URSA Broadcast G2	
▪ Blackmagic Micro Studio Camera 4K G2	
▪ Blackmagic Pocket Cinema Camera 4K	▪ Blackmagic Pocket Cinema Camera 6K G2 ▪ Blackmagic Pocket Cinema Camera 6K Pro
▪ Blackmagic Studio Camera 4K Plus ▪ Blackmagic Studio Camera 4K Pro ▪ Blackmagic Studio Camera 6K Pro	▪ Blackmagic Studio Camera 4K Plus G2 ▪ Blackmagic Studio Camera 4K Pro G2

Sending API Commands

To send an API command to your camera from a third party application such as Postman, add /control/api/v1/ to the end of the camera's Web media manager URL or IP address. For example, https://ursa-broadcast-g2.local/control/api/v1/

You can find the Web media manager URL and IP address information in Blackmagic Camera Setup.

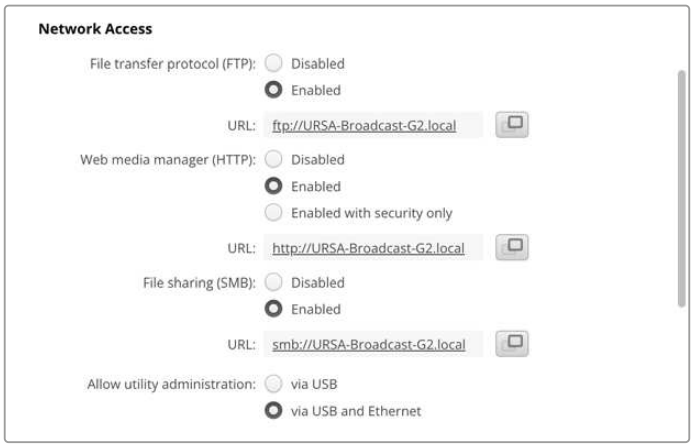

The Web media manager URL in Blackmagic Camera Setup

Downloading API's from your Camera

You can download REST API YAML documentation from your camera by adding /control/documentation.html to the end of the camera's Web media manager URL or IP address. For example, https://ursa-broadcast-g2.local/control/documentation.html

> **NOTE** It's worth noting that changing the camera name in Blackmagic Camera Setup will also change the camera's Web media manager URL.

Panel Control API

API for externally controlling hardware panel elements on Blackmagic Design products.

GET /panel/devices

Get list of all available hardware panel controls.

Response

200 - List of panel devices.

The response is JSON.

Name	Type	Description
	array	
[i]	object	
[i].name (required)	string	Unique name of the hard-ware panel control.
[i].type (required)	string	Type of hardware control. Currently only "button" is supported. Possible values are: button.
[i].enabled (required)	boolean	Whether the hardware con-trol is currently enabled and can accept actions.

500 - Internal server error.

GET /panel/devices/{name}/state

Get specific hardware control state.

Parameters

Name	Type	Description
{name} (required)	string	Name of the hardware panel control. Must match pattern [a-zA-Z0-9-]+

Response

200 - Device state.

The response is JSON.

Name	Type	Description
name (required)	string	Unique name of the hardware panel control.
type (required)	string	Type of hardware control. Currently only “button” is supported. Possible values are: button.
enabled (required)	boolean	Whether the hardware control is currently enabled and can accept actions.

404 - Device not found.

500 - Internal server error.

PUT /panel/devices/{name}/state

Inject hardware control action.

Parameters

Name	Type	Description
{name} (required)	string	Name of the hardware panel control. Must match pattern [a-zA-Z0-9-]+

Name	Type	Description
action (required)	string	Action to perform on the hardware control. Currently only “press” is supported for buttons. Possible values are: press.
holdDuration	integer	Optional duration in milliseconds to hold the button pressed. - Minimum: 0 (immediate release) - Maximum: 5000 (5 seconds) - Default: 100 (if not specified) - To keep holding beyond 5 seconds, send a new request before the current one expires

Response

204 - Action performed successfully.

400 - Invalid action, device is disabled, or hold duration exceeds maximum limit.

404 - Device not found.

500 - Internal server error.

Livestream Control API

API for controlling Livestreams on Blackmagic Design products.

GET /livestreams/0

Get the livestream's current status.

Response

200 - Livestream's current status.

The response is JSON.

Name	Type	Description
status (required)	string	Possible values are: Idle, Connecting, Streaming, Flushing, Interrupted.
bitrate (required)	integer	Current bitrate (bps).
effectiveVideoFormat (required)	string	Effective video format for the livestream, serialised as a string.
duration	integer	Current stream duration in seconds. Absent if livestream is idle.
cache	integer	Current stream cache usage percentage.

501 - Not implemented for this device.

GET /livestreams/0/start

Determine if the livestream is active.

Response

200 - Livestream active status.

The response is JSON.

Name	Type	Description
	boolean	True when the livestream is active.

501 - Not implemented for this device.

PUT /livestreams/0/start

Start the livestream.

Response

204 - Livestream started.

501 - Not implemented for this device.

GET /livestreams/0/stop

Determine if the livestream is inactive.

Response

200 - Livestream inactive status.

The response is JSON.

Name	Type	Description
	boolean	True when the livestream is inactive.

501 - Not implemented for this device.

PUT /livestreams/0/stop

Stop the livestream.

Response

204 - Livestream stopped.

501 - Not implemented for this device.

GET /livestreams/0/available

Check if livestreaming is currently available.

Response

200 - Livestreaming availability status.

The response is JSON.

Name	Type	Description
available (required)	boolean	True if livestreaming is currently available.
reasons (required)	array	Reasons why livestreaming is unavailable (empty if available is true).
reasons[i]	string	Possible values are: not-supported, unsupported-format, in-playback, pending-format-transition, unexpected-reason.

501 - Not implemented for this device.

GET /livestreams/0/activePlatform

Get the currently selected platform configuration for the livestream.

Response

200 - Livestream active platform configuration.

The response is JSON.

Livestream's current active platform configuration.

Name	Type	Description
platform (required)	string	Platform name.
server (required)	string	The platform's server name, or "Custom" when the URL is customizable.
key	string	Stream key. Assumed to be empty if missing.
passphrase	string	Passphrase. Only included for SRT streams.
quality (required)	string	Quality level name.
url	string	Livestream destination. Only included when URL is customizable.

501 - Not implemented for this device.

PUT /livestreams/0/activePlatform

Set the currently selected platform configuration for the livestream.

Parameters

Livestream's current active platform configuration.

Name	Type	Description
platform (required)	string	Platform name.
server (required)	string	The platform's server name, or "Custom" when the URL is customizable.
key	string	Stream key. Assumed to be empty if missing.
passphrase	string	Passphrase. Only included for SRT streams.
quality (required)	string	Quality level name.
url	string	Livestream destination. Only included when URL is customizable.

Response

204 - Livestream active platform configuration updated.

400 - Bad Request - invalid configuration.

501 - Not implemented for this device.

GET /livestreams/platforms

Get the list of available platforms.

Response

200 - List of available platforms.

The response is JSON.

Name	Type	Description
	array	List of available platforms names.
[i]	string	Platform name.

501 - Not implemented for this device.

GET /livestreams/platforms/{platformName}

Get the service configuration for a platform.

Parameters

Name	Type	Description
{platformName} (required)	string	Name of the platform.

Response

200 - Service configuration for specified platform.

The response is JSON.

Livestream platform service configuration.

Name	Type	Description
platform (required)	string	Corresponding platform name.
key	string	Default stream key.
servers (required)	array	List of server configurations.
servers[i]	object	Server configuration.
servers[i].server (required)	string	Server name.
servers[i].url (required)	string	Livestream destination.
servers[i].srtExtensions	array	Miscellaneous tags used for SRT livestreams.
servers[i].srtExtensions[i]	object	Dictionary object mapping SRT tag strings to values.
servers[i].srtExtensions[i][{key}]	string	SRT tag value.
servers[i].group	string	Logical grouping of the server.
profiles (required)	array	List of profile configurations.
profiles[i]	object	Quality configuration.
profiles[i].profile (required)	string	Quality level name.
profiles[i].configs (required)	array	List of video format configurations.
profiles[i].configs[i]	object	Video format configuration for profiles.
profiles[i].configs[i].resolution (required)	string	Video format serialised as a string.
profiles[i].configs[i].fps (required)	string	Frames per second.
profiles[i].configs[i].bitrate (required)	integer	Pixel bitrate (bps).
profiles[i].configs[i].audioBitrate	integer	Audio bitrate (bps).

Name	Type	Description
profiles[i].configs[i].keyFrameInterval	integer	How often a key frame is sent, in seconds.
profiles[i].configs[i].videoCodecs	array	Supported video encoding algorithm/s.
profiles[i].configs[i].videoCodecs[i]	string	Video encoding algorithm. Possible values are: H264, H265.
profiles[i].lowLatency (required)	boolean	If true, fewer frames will be buffered in the livestream.
defaultProfile	string	Quality level name.
credentials	object	Credientials used for RTMP streams.
credentials.username (required)	string	The username part of the creditials. Only used for RTMP streams.
credentials.password (required)	string	Used for RTMP streams, also used as Passphrase for SRT streams.
customizableUrlEnabled	boolean	True when the server URL is customizable.

400 - Bad Request - invalid platform name.

501 - Not implemented for this device.

GET /livestreams/customPlatforms

Get a list of custom platform files.

Response

200 - List of custom platform files.

The response is JSON.

Name	Type	Description
	array	List of custom platform file names.
[i]	string	Custom platform file name.

501 - Not implemented for this device.

DELETE /livestreams/customPlatforms

Remove all custom configuration files.

Response

204 - All custom configuration files removed.

501 - Not implemented for this device.

GET /livestreams/customPlatforms/{filename}

Get a custom platform file.

Parameters

Name	Type	Description
{filename} (required)	string	Name of the file to get.

Response

200 - Custom platform file.

The response is XML.

Blackmagic streaming XML file format.

Name	Type	Description
	object	Blackmagic streaming XML file format.

404 - File not found.

501 - Not implemented for this device.

PUT /livestreams/customPlatforms/{filename}

Update a custom platform file if it exists, if not, create a new file with the given file name.

Parameters

Name	Type	Description
{filename} (required)	string	Name of the file to update/create.

Blackmagic streaming XML file format.

Name	Type	Description
	object	Blackmagic streaming XML file format.

Response

204 - Custom platform file created or updated.

400 - Bad Request - invalid filename or XML content.

501 - Not implemented for this device.

DELETE /livestreams/customPlatforms/{filename}

Remove the given custom platform file.

Parameters

Name	Type	Description
{filename} (required)	string	Name of the file to be removed.

Response

204 - Custom platform file removed.

404 - File not found.

501 - Not implemented for this device.

Clips Control API

API for listing clips on disk.

GET /clips

Get the list of clips on the active disk.

Response

200 - List of clips on the active disk.

The response is JSON.

List of media clips.

Name	Type	Description
clips (required)	array	
clips[i]	object	Media clip.
clips[i].clipUniqueId (required)	integer	Unique ID used to identify this clip.
clips[i].filePath	string	Path to the file relative to the root of a mount.
clips[i].fileSize	integer	Size of file on disk in bytes.
clips[i].codecFormat	object	
clips[i].codecFormat.codec	string	Currently selected codec.
clips[i].codecFormat.container	string	Multimedia container format.
clips[i].videoFormat	object	Video format configuration.
clips[i].videoFormat.name (required)	string	Video format serialised as a string.
clips[i].videoFormat.frameRate	string	Frame rate. Possible values are: 23.98, 24.00, 24, 25.00, 25, 29.97, 30.00, 30, 47.95, 48.00, 48, 50.00, 50, 59.94, 60.00, 60, 119.88, 120.00, 120.
clips[i].videoFormat.height	number	Height dimension of video format.
clips[i].videoFormat.width	number	Width dimension of video format.
clips[i].videoFormat.interlaced	boolean	Is the display format interlaced?
clips[i].startTimecode	string	Start timecode of the clip serialised as string.
clips[i].durationTimecode	string	Duration of the clip in timecode format serialised as string.
clips[i].frameCount	integer	Number of frames in clip; duration of the clip in frames.

404 - There is no active disk.

500 - Internal server error.

Monitoring Control API

API for monitoring and controlling display settings in Blackmagic Design products.

GET /monitoring/display

Retrieve a list of all display names.

Response

200 - Returns a list of display names.

The response is JSON.

Name	Type	Description
displays	array	List of display names available.
displays[i]	string	

GET /monitoring/{displayName}/cleanFeed

Get the clean feed enable state for a specific display.

Parameters

Name	Type	Description
{displayName} (required)	string	Name of the display. Obtainable from /monitoring/display which returns a list of displayNames.

Response

200 - OK

The response is JSON.

Name	Type	Description
enabled (required)	boolean	Indicates if the feature is enabled.

400 - Invalid display name format.

404 - Display name not found.

422 - Unable to retrieve the clean feed state.

PUT /monitoring/{displayName}/cleanFeed

Set the clean feed enable state for a specific display.

Parameters

Name	Type	Description
{displayName} (required)	string	Name of the display. Obtainable from /monitoring/display which returns a list of displayNames.

Name	Type	Description
enabled (required)	boolean	Indicates if the feature is enabled.

Response

204 - Clean feed enabled/disabled successfully.

400 - Invalid input or display name format.

404 - Display name not found.

422 - Failed to set clean feed enable.

GET /monitoring/{displayName}/displayLUT

Get the display LUT enable state for a specific display.

Parameters

Name	Type	Description
{displayName} (required)	string	Name of the display. Obtainable from /monitoring/display which returns a list of displayNames.

Response

200 - OK

The response is JSON.

Name	Type	Description
enabled (required)	boolean	Indicates if the feature is enabled.

400 - Invalid display name format.

404 - Display name not found.

422 - Failed to get display LUT enable state.

PUT /monitoring/{displayName}/displayLUT

Set the display LUT enable state for a specific display.

Parameters

Name	Type	Description
{displayName} (required)	string	Name of the display. Obtainable from /monitoring/display which returns a list of displayNames.

Name	Type	Description
enabled (required)	boolean	Indicates if the feature is enabled.

Response

204 - Display LUT enabled/disabled successfully.

400 - Invalid input or display name format.

404 - Display name not found.

422 - Failed to set display LUT enable.

GET /monitoring/{displayName}/zebra

Get the zebra enable state for a specific display.

Parameters

Name	Type	Description
{displayName} (required)	string	Name of the display. Obtainable from /monitoring/display which returns a list of displayNames.

Response

200 - OK

The response is JSON.

Name	Type	Description
enabled (required)	boolean	Indicates if the feature is enabled.

400 - Invalid display name format.

404 - Display name not found.

422 - Failed to get zebra enable state.

PUT /monitoring/{displayName}/zebra

Set the zebra enable state for a specific display.

Parameters

Name	Type	Description
{displayName} (required)	string	Name of the display. Obtainable from /monitoring/display which returns a list of displayNames.

Name	Type	Description
enabled (required)	boolean	Indicates if the feature is enabled.

Response

204 - Zebra enabled/disabled successfully.

400 - Invalid input or display name format.

404 - Display name not found.

422 - Failed to set zebra enable.

GET /monitoring/zebra

Get the zebra settings.

Response

200 - OK

The response is JSON.

Name	Type	Description
highlight	object	
highlight.level		
highlight.enabled	boolean	True if highlight zebra is enabled.
skinTone	object	
skinTone.type	string	The type of skin tone zebra. Possible values are: None, Blowout Threshold, Middle Grey +1, Middle Grey.
skinTone.enabled	boolean	True if skin tone zebra is enabled.

PUT /monitoring/zebra

Set the zebra settings.

Parameters

Name	Type	Description
highlight	object	
highlight.level		
highlight.enabled	boolean	True if highlight zebra is enabled.
skinTone	object	
skinTone.type	string	The type of skin tone zebra. Possible values are: None, Blowout Threshold, Middle Grey +1, Middle Grey.
skinTone.enabled	boolean	True if skin tone zebra is enabled.

Response

204 - Zebra settings updated successfully.

400 - Invalid zebra settings.

422 - Failed to set zebra settings.

GET /monitoring/{displayName}/focusAssist

Get the focus assist enable state for a specific display.

Parameters

Name	Type	Description
{displayName} (required)	string	Name of the display. Obtainable from /monitoring/display which returns a list of displayNames.

Response

200 - OK

The response is JSON.

Name	Type	Description
enabled (required)	boolean	Indicates if the feature is enabled.

400 - Invalid display name format.

404 - Display name not found.

422 - Failed to get focus assist enable state.

PUT /monitoring/{displayName}/focusAssist

Set the focus assist enable state for a specific display.

Parameters

Name	Type	Description
{displayName} (required)	string	Name of the display. Obtainable from /monitoring/display which returns a list of displayNames.

Name	Type	Description
enabled (required)	boolean	Indicates if the feature is enabled.

Response

204 - Focus assist settings updated successfully.

400 - Invalid input or display name format.

404 - Display name not found.

422 - Failed to set focus assist enable.

GET /monitoring/focusAssist

Get the focus assist settings.

Response

200 - OK

The response is JSON.

Name	Type	Description
mode (required)	string	Mode of focus assist. Possible values are: Peak, ColoredLines.
color (required)	string	Color of the focus assist highlight. Possible values are: Red, Green, Blue, White, Black.
intensity (required)	integer	Intensity of the focus assist highlight (0-100).

PUT /monitoring/focusAssist

Set the focus assist settings.

Parameters

Name	Type	Description
mode (required)	string	Mode of focus assist. Possible values are: Peak, ColoredLines.
color (required)	string	Color of the focus assist highlight. Possible values are: Red, Green, Blue, White, Black.
intensity (required)	integer	Intensity of the focus assist highlight (0-100).

Response

204 - Focus assist settings updated successfully.

400 - Invalid focus assist settings. Intensity must be between 0 and 100.

422 - Failed to set focus assist settings.

GET /monitoring/{displayName}/frameGuide

Get the frame guide enable state for a specific display.

Parameters

Name	Type	Description
{displayName} (required)	string	Name of the display. Obtainable from /monitoring/display which returns a list of displayNames.

Response

200 - Returns the frame guide enable state.

The response is JSON.

Name	Type	Description
enabled (required)	boolean	Indicates if the feature is enabled.

400 - Invalid display name format.

404 - Display not found.

422 - Failed to get frame guide enable state.

PUT /monitoring/{displayName}/frameGuide

Set the frame guide enable state for a specific display.

Parameters

Name	Type	Description
{displayName} (required)	string	Name of the display. Obtainable from /monitoring/display which returns a list of displayNames.

Name	Type	Description
enabled (required)	boolean	Indicates if the feature is enabled.

Response

204 - Frame guide state updated successfully.

400 - Invalid input or display name format.

404 - Display not found.

422 - Failed to set frame guide enable.

GET /monitoring/frameGuideRatio

Get the current frame guide ratio.

Response

200 - Returns the current frame guide ratio.

The response is JSON.

Name	Type	Description
ratio (required)	string	The frame guide ratio in format “width:height”.

422 - Failed to get frame guide ratio.

PUT /monitoring/frameGuideRatio

Set the frame guide ratio.

Parameters

Name	Type	Description
ratio (required)	string	The frame guide ratio in format “width:height”.

Response

204 - Frame guide ratio updated successfully.

400 - Invalid frame guide ratio.

422 - Failed to set frame guide ratio.

GET /monitoring/frameGuideRatio/presets

Get the presets for frame guide ratios.

Response

200 - Returns a list of preset frame guide ratios.

The response is JSON.

Name	Type	Description
presets	array	
presets[i]	string	A frame guide ratio.

GET /monitoring/{displayName}/frameGrids

Get the frame grids enable state for a specific display.

Parameters

Name	Type	Description
{displayName} (required)	string	Name of the display. Obtainable from /monitoring/display which returns a list of displayNames.

Response

200 - Returns the frame grids enable state.

The response is JSON.

Name	Type	Description
enabled (required)	boolean	Indicates if the feature is enabled.

400 - Invalid display name format.

404 - Display not found.

422 - Failed to get frame grids enable state.

PUT /monitoring/{displayName}/frameGrids

Set the frame grids enable state for a specific display.

Parameters

Name	Type	Description
{displayName} (required)	string	Name of the display. Obtainable from /monitoring/display which returns a list of displayNames.

Name	Type	Description
enabled (required)	boolean	Indicates if the feature is enabled.

Response

204 - Frame grids state updated successfully.

400 - Invalid input or display name format.

404 - Display not found.

422 - Failed to set frame grids enable.

GET /monitoring/frameGrids

Get the global frame grids settings.

Response

200 - Returns the current frame grids settings.

The response is JSON.

Name	Type	Description
frameGrids (required)	array	List of frame grids enabled. At most 2 can be active, and if 2 are active, one must be “Thirds”.
frameGrids[i]	string	Possible values are: Thirds, Crosshair, Dot, Horizon.

PUT /monitoring/frameGrids

Set the global frame grids settings.

Parameters

Name	Type	Description
frameGrids (required)	array	List of frame grids enabled. At most 2 can be active, and if 2 are active, one must be “Thirds”.
frameGrids[i]	string	Possible values are: Thirds, Crosshair, Dot, Horizon.

Response

204 - Frame grids settings updated successfully.

400 - Invalid input. Must select at most 2 frame grids, one of which must be Thirds if two are selected.

422 - Failed to set frame grids.

GET /monitoring/{displayName}/safeArea

Get the safe area enable state for a specific display.

Parameters

Name	Type	Description
{displayName} (required)	string	Name of the display. Obtainable from /monitoring/display which returns a list of displayNames.

Response

200 - Returns the safe area enable state.

The response is JSON.

Name	Type	Description
enabled (required)	boolean	Indicates if the feature is enabled.

400 - Invalid display name format.

404 - Display not found.

422 - Failed to get safe area enable state.

501 - Safe area feature not supported on this product.

PUT /monitoring/{displayName}/safeArea

Set the safe area enable state for a specific display.

Parameters

Name	Type	Description
{displayName} (required)	string	Name of the display. Obtainable from /monitoring/display which returns a list of displayNames.

Name	Type	Description
enabled (required)	boolean	Indicates if the feature is enabled.

Response

204 - Safe area state updated successfully.

400 - Invalid input or display name format.

404 - Display not found.

422 - Failed to set safe area enable.

501 - Safe area feature not supported on this product.

GET /monitoring/safeAreaPercent

Get the current safe area percentage.

Response

200 - Returns the current safe area percentage.

The response is JSON.

Name	Type	Description
percent	integer	Safe area coverage percentage.

422 - Failed to get safe area percentage.

501 - Safe area feature not supported on this product.

PUT /monitoring/safeAreaPercent

Set the safe area percentage.

Parameters

Name	Type	Description
percent (required)	integer	Safe area coverage percentage to set (0-100).

Response

204 - Safe area percentage updated successfully.

400 - Invalid percentage value. Must be between 0 and 100.

422 - Failed to set safe area percentage.

501 - Safe area feature not supported on this product.

GET /monitoring/{displayName}/falseColor

Get the false color enable state for a specific display.

Parameters

Name	Type	Description
{displayName} (required)	string	Name of the display. Obtainable from /monitoring/display which returns a list of displayNames.

Response

200 - Returns the false color enable state.

The response is JSON.

Name	Type	Description
enabled (required)	boolean	Indicates if the feature is enabled.

400 - Invalid display name format.

404 - Display not found.

422 - Failed to get false color enable state.

PUT /monitoring/{displayName}/falseColor

Set the false color enable state for a specific display.

Parameters

Name	Type	Description
{displayName} (required)	string	Name of the display. Obtainable from /monitoring/display which returns a list of displayNames.

Name	Type	Description
enabled (required)	boolean	Indicates if the feature is enabled.

Response

204 - False color state updated successfully.

400 - Invalid input or display name format.

404 - Display not found.

422 - Failed to set false color enable.

GET /monitoring/{displayName}/brightness

Get the brightness level for a specific display.

Parameters

Name	Type	Description
{displayName} (required)	string	Name of the display. Obtainable from /monitoring/display which returns a list of displayNames.

Response

200 - Returns the brightness level.

The response is JSON.

Name	Type	Description
brightness	integer	Brightness level (0-100).
adjustable	boolean	Indicates if brightness is adjustable for this display.

400 - Invalid display name format.

404 - Display not found or not available on this product.

PUT /monitoring/{displayName}/brightness

Set the brightness level for a specific display.

Parameters

Name	Type	Description
{displayName} (required)	string	Name of the display. Obtainable from /monitoring/display which returns a list of displayNames.

Name	Type	Description
brightness (required)	integer	Brightness level (0-100)

Response

204 - Brightness updated successfully.

400 - Invalid input, display name format, or brightness not adjustable for this display.

404 - Display not found or not available on this product.

Event Control API

API For working with built-in websocket.

GET /event/list

Get the list of events that can be subscribed to using the websocket API.

Response

200 - Websocket API events list.

The response is JSON.

Name	Type	Description
events	array	List of events that can be subscribed to using the websocket API.
events[i]	string	

System Control API

API for controlling the System Modes on Blackmagic Design products.

GET /system

Get device system information.

Response

200 - System summary.

The response is JSON.

The properties will be populated only with the values that are supported/implemented by the device in use.

Name	Type	Description
codecFormat	object	Codec format configuration.
codecFormat.codec	string	Codec serialised as string.
codecFormat.container	string	Multimedia container format.
videoFormat	object	Video format configuration.
videoFormat.name (required)	string	Video format serialised as a string.
videoFormat.frameRate	string	Frame rate. Possible values are: 23.98, 24.00, 24, 25.00, 25, 29.97, 30.00, 30, 47.95, 48.00, 48, 50.00, 50, 59.94, 60.00, 60, 119.88, 120.00, 120.
videoFormat.height	number	Height dimension of video format.
videoFormat.width	number	Width dimension of video format.
videoFormat.interlaced	boolean	Is the display format interlaced?

501 - This functionality is not implemented for the device in use.

GET /system/product

Get device product information.

Response

200 - Device product information.

The response is JSON.

Product information.

Name	Type	Description
deviceName	string	Name of device as displayed in Setup.
productName	string	Device's product name.
softwareVersion	string	Software version running on device.

501 - This functionality is not implemented for the device in use.

GET /system/supportedCodecFormats

Get the list of supported codecs.

Response

200 - List of supported codec formats.

The response is JSON.

Name	Type	Description
codecFormats	array	
codecFormats[i]	object	Codec format configuration.
codecFormats[i].codec	string	Codec serialised as string.
codecFormats[i].container	string	Multimedia container format.

501 - This functionality is not implemented for the device in use.

GET /system/codecFormat

Get the currently selected codec.

Response

200 - Current codec format.

The response is JSON.

Codec format configuration.

Name	Type	Description
codec	string	Codec serialised as string.
container	string	Multimedia container format.

501 - This functionality is not implemented for the device in use.

PUT /system/codecFormat

Update the system codec.

Parameters

Codec format configuration.

Name	Type	Description
codec	string	Codec serialised as string.
container	string	Multimedia container format.

Response

204 - The codec updated successfully.

400 - The specified codec format is unsupported or invalid.

501 - This functionality is not implemented for the device in use.

GET /system/videoFormat

Get the currently selected video format.

Response

200 - Current system video format.

The response is JSON.

Video format configuration.

Name	Type	Description
name (required)	string	Video format serialised as a string.
frameRate	string	Frame rate. Possible values are: 23.98, 24.00, 24, 25.00, 25, 29.97, 30.00, 30, 47.95, 48.00, 48, 50.00, 50, 59.94, 60.00, 60, 119.88, 120.00, 120.
height	number	Height dimension of video format.
width	number	Width dimension of video format.
interlaced	boolean	Is the display format interlaced?

501 - This functionality is not implemented for the device in use.

PUT /system/videoFormat

Set the system video format.

Parameters

This parameter can be one of the following types:

Name	Type	Description
name (required)	string	Video format serialised as a string.

Name	Type	Description
frameRate (required)	string	Frame rate. Possible values are: 23.98, 24.00, 24, 25.00, 25, 29.97, 30.00, 30, 47.95, 48.00, 48, 50.00, 50, 59.94, 60.00, 60, 119.88, 120.00, 120.
height (required)	number	Height dimension of video format.
width (required)	number	Width dimension of video format.
interlaced	boolean	Is the display format interlaced?

Response

204 - The video format updated successfully.

400 - Invalid request or unsupported format.

409 - Operation unsupported in the current state.

501 - This functionality is not implemented for the device in use.

GET /system/supportedVideoFormats

Get the list of supported video formats for the current system state.

Response

200 - List of supported video formats.

The response is JSON.

List of supported video formats.

Name	Type	Description
videoFormats	array	List of video formats.
videoFormats[i]	string	Video format serialised as string.

501 - This functionality is not implemented for the device in use.

GET /system/supportedFormats

Get supported formats.

Response

200 - List of supported formats.

The response is JSON.

Name	Type	Description
supportedFormats	array	
supportedFormats[i]	object	
supportedFormats[i].recordResolution	object	
supportedFormats[i].recordResolution.height	number	Height of the resolution.
supportedFormats[i].recordResolution.width	number	Width of the resolution.
supportedFormats[i].sensorResolution	object	
supportedFormats[i].sensorResolution.height	number	Height of the resolution.
supportedFormats[i].sensorResolution.width	number	Width of the resolution.
supportedFormats[i].codecs	array	
supportedFormats[i].codecs[i]	string	
supportedFormats[i].frameRates	array	
supportedFormats[i].frameRates[i]	string	Frame rate. Possible values are: 23.98, 24.00, 24, 25.00, 25, 29.97, 30.00, 30, 47.95, 48.00, 48, 50.00, 50, 59.94, 60.00, 60, 119.88, 120.00, 120.
supportedFormats[i].minOffSpeedFrameRate	number	
supportedFormats[i].maxOffSpeedFrameRate	number	
supportedFormats[i].resolutionDescriptor	object	
supportedFormats[i].resolutionDescriptor.group	string	Resolution group for UI display.
supportedFormats[i].resolutionDescriptor.aspectRatio	string	Aspect ratio of the resolution.
supportedFormats[i].resolutionDescriptor.description	string	Human-readable description of the resolution.
supportedFormats[i].resolutionDescriptor.sensorArea	string	Area of the sensor used for this resolution.

501 - This functionality is not implemented for the device in use.

GET /system/format

Get current format.

Response

200 - Current format.

The response is JSON.

Name	Type	Description
codec	string	Codec format serialised as a string.
frameRate	string	Frame rate. Possible values are: 23.98, 24.00, 24, 25.00, 25, 29.97, 30.00, 30, 47.95, 48.00, 48, 50.00, 50, 59.94, 60.00, 60, 119.88, 120.00, 120.
maxOffSpeedFrameRate	number	
minOffSpeedFrameRate	number	
offSpeedEnabled	boolean	
offSpeedFrameRate	number	
recordResolution	object	
recordResolution.height	number	Height of the resolution.
recordResolution.width	number	Width of the resolution.
sensorResolution	object	
sensorResolution.height	number	Height of the resolution.
sensorResolution.width	number	Width of the resolution.
resolutionDescriptor	object	
resolutionDescriptor.group	string	Resolution group for UI display.
resolutionDescriptor.aspectRatio	string	Aspect ratio of the resolution.
resolutionDescriptor.description	string	Human-readable description of the resolution.
resolutionDescriptor.sensorArea	string	Area of the sensor used for this resolution.

501 - This functionality is not implemented for the device in use.

PUT /system/format

Set the format.

Parameters

Format update request. While fields are technically optional in the request, the system requires a complete valid format combination for successful update.

Name	Type	Description
codec	string	Codec format serialised as a string.
frameRate	string	Frame rate. Possible values are: 23.98, 24.00, 24, 25.00, 25, 29.97, 30.00, 30, 47.95, 48.00, 48, 50.00, 50, 59.94, 60.00, 60, 119.88, 120.00, 120.
offSpeedEnabled	boolean	Enable or disable off-speed recording.
offSpeedFrameRate	number	Frame rate for off-speed recording (must be within min/max range).
recordResolution	object	
recordResolution.height	number	Height of the resolution.
recordResolution.width	number	Width of the resolution.
sensorResolution	object	
sensorResolution.height	number	Height of the resolution.
sensorResolution.width	number	Width of the resolution.

Response

204 - System format updated.

400 - Format is not supported.

501 - This functionality is not implemented for the device in use.

Transport Control API

API for controlling Transport on Blackmagic Design products.

GET /transports/0

Get device's basic transport status.

Response

200 - Transport status.

The response is JSON.

Name	Type	Description
mode	string	Transport mode. Possible values are: InputPreview, InputRecord, Output.

PUT /transports/0

Set device's basic transport status.

Parameters

Name	Type	Description
mode (required)	string	Transport mode. Possible values are: InputPreview, Output.

Response

204 - Transport mode was set.

400 - Failed to set transport mode or invalid state.

500 - Internal server error.

GET /transports/0/stop

Determine if transport is stopped.

Response

200 - Transport stop response.

The response is JSON.

Name	Type	Description
	boolean	True when transport mode is InputPreview or when in Output mode and speed is 0.

PUT /transports/0/stop

Stop transport (DEPRECATED).

Response

204 - Transport stopped.

500 - Internal server error.

POST /transports/0/stop

Stop transport.

Response

204 - Transport stopped.

500 - Internal server error.

GET /transports/0/play

Determine if transport is playing.

Response

200 - Transport play response.

The response is JSON.

Name	Type	Description
	boolean	True when transport is in Output mode and speed is non-zero.

PUT /transports/0/play

Start playing on transport (DEPRECATED).

Response

204 - Transport playing.

400 - Failed to set transport to play.

500 - Internal server error.

POST /transports/0/play

Start playing on transport.

Response

204 - Transport playing.

400 - Failed to set transport to play.

500 - Internal server error.

GET /transports/0/playback

Get playback state.

Response

200 - Transport playback state.

The response is JSON.

Name	Type	Description
type	string	Possible values are: Play, Jog, Shuttle, Var.
loop	boolean	When true, playback loops from the end of the timeline to the beginning of the timeline.
singleClip	boolean	When true, playback loops from the end of the current clip to the beginning of the current clip.
speed	number	Playback speed, 1.0 for normal forward playback.
position	integer	Playback position on the timeline in units of video frames, where 0 is the first frame of the timeline.

PUT /transports/0/playback

Set playback state.

Parameters

Name	Type	Description
type	string	Possible values are: Play, Jog, Shuttle, Var.
loop	boolean	When true, playback loops from the end of the timeline to the beginning of the timeline.
singleClip	boolean	When true, playback loops from the end of the current clip to the beginning of the current clip.
speed	number	Playback speed, 1.0 for normal forward playback.
position	integer	Playback position on the timeline in units of video frames, where 0 is the first frame of the timeline.

Response

204 - Updated transport playback state.

400 - Failed to set transport playback state.

500 - Internal server error.

GET /transports/0/record

Get record state.

Response

200 - Recording state.

The response is JSON.

Name	Type	Description
recording	boolean	If true, transport is in InputRecord mode.

PUT /transports/0/record

Set record state (DEPRECATED).

Parameters

Name	Type	Description
recording (required)	boolean	If true, starts a recording, otherwise stops.
clipName	string	Optional, sets the requested clip name to record to, when “recording” attribute is set to true.

Response

204 - Recording state updated.

400 - Failed to update recording state.

500 - Internal server error.

POST /transports/0/record

Start recording.

Parameters

Name	Type	Description
clipName	string	Optional, provides a specific name of clip to record to.

Response

204 - Recording started.

400 - Failed to start recording.

500 - Internal server error.

GET /transports/0/clipIndex

Get the clip index of the currently playing clip on the timeline.

Response

200 - Clip index response.

The response is JSON.

Name	Type	Description
clipIndex	integer | null	The 0-based index of the clip being played on the timeline. null when there is no timeline or an empty timeline.

GET /transports/0/timecode

Get device timecode.

Response

200 - Timecode response.

The response is JSON.

Name	Type	Description
display	string	The display timecode serialised as a string.
timeline	string	The timeline timecode serialised as a string.

GET /transports/0/timecode/source

Get timecode source selected on device.

Response

200 - Timecode source response.

The response is JSON.

Name	Type	Description
source	string	Selected timecode source. Possible values are: Timeline, Clip.
timecodeInputSource	string	Selected timecode input source. Possible values are: Internal, Embedded, External, TimeOfDay, Preset, LastClip, Unknown.

POST /transports/0/doStillCapture

Capture a still image.

Response

204 - Still capture initiated successfully.

404 - The device does not support still capture.

500 - Failed to capture still. The error message will provide more detail.

GET /transports/0/prerecord

Get current prerecord status.

Response

200 - Prerecord status.

The response is JSON.

Name	Type	Description
prerecording	boolean	True when prerecording is currently active (either from auto mode or one-shot trigger).
duration	integer	The elapsed duration of the active prerecord buffer in seconds. Returns 0 when not prerecording.

404 - The device does not support prerecord.

POST /transports/0/prerecord

Trigger one-shot prerecord.

Response

204 - One-shot prerecord triggered successfully.

404 - The device does not support prerecord.

500 - Failed to trigger prerecord.

GET /transports/0/prerecord/auto

Get auto prerecord configuration.

Response

200 - Auto prerecord configuration.

The response is JSON.

Name	Type	Description
autoEnabled (required)	boolean	Enable or disable automatic prerecord mode. When enabled, prerecord automatically activates when the device is ready.

404 - The device does not support prerecord.

PUT /transports/0/prerecord/auto

Set auto prerecord configuration.

Parameters

Name	Type	Description
autoEnabled (required)	boolean	Enable or disable automatic prerecord mode. When enabled, prerecord automatically activates when the device is ready.

Response

204 - Auto prerecord configuration updated successfully.

400 - Invalid request body.

404 - The device does not support prerecord.

500 - Failed to set auto prerecord configuration.

GET /transports/0/prerecord/maxDuration

Get maximum prerecord duration.

Response

200 - Maximum prerecord duration.

The response is JSON.

Name	Type	Description
maxDuration (required)	integer	Maximum prerecord duration in seconds. Must be one of the values returned by /transports/0/prerecord/supportedMaxDurations.

404 - The device does not support prerecord.

PUT /transports/0/prerecord/maxDuration

Set maximum prerecord duration.

Parameters

Name	Type	Description
maxDuration (required)	integer	Maximum prerecord duration in seconds. Must be one of the values returned by /transports/0/prerecord/supportedMaxDurations.

Response

204 - Maximum prerecord duration updated successfully.

400 - Invalid maxDuration value. Must be one of the supported durations.

404 - The device does not support prerecord.

500 - Failed to set maximum prerecord duration.

GET /transports/0/prerecord/supportedMaxDurations

Get supported maximum prerecord durations.

Response

200 - Array of supported maximum prerecord durations in seconds.

The response is JSON.

Name	Type	Description
	array	
[i]	integer	Duration in seconds.

404 - The device does not support prerecord.

GET /transports/0/proxyRecording

Get proxy recording configuration.

Response

200 - Proxy recording configuration.

The response is JSON.

Name	Type	Description
enabled (required)	boolean	Enable or disable proxy recording.

404 - The device does not support proxy recording.

PUT /transports/0/proxyRecording

Set proxy recording configuration.

Parameters

Name	Type	Description
enabled (required)	boolean	Enable or disable proxy recording.

Response

204 - Proxy recording configuration updated successfully.

400 - Invalid request body.

404 - The device does not support proxy recording.

500 - Failed to set proxy recording configuration.

Timeline Control API

API for controlling playback timeline.

GET /timelines/0

Get the playback timeline.

Response

200 - Playback timeline.

The response is JSON.

Name	Type	Description
clips	array	
clips[i]	object	Timeline clip.
clips[i].clipUniqueId (required)	integer	Unique identifier used to identify this media clip. If the same media clip is added to the timeline multiple times, each timeline clip has the same clipUniqueId
clips[i].frameCount	integer	Duration of timeline clip in frames, the number of frames in this clip on the timeline.
clips[i].durationTimecode	string	Duration of the timeline clip in timecode format serialised as string. This will differ to durationTimecode reported in /clips for this clipUniqueId if clipIn or frameCount was specified when adding this clip to the timeline.
clips[i].clipIn	string	In frame offset for the clip on the timeline, where 0 is the first frame of the on-disk clip.
clips[i].inTimecode	string	Clip timecode of the first frame of this timeline clip serialised as string (clip startTimecode + clipIn frames).
clips[i].timelineIn	string	Timeline position of the first frame of this clip, where 0 is the first frame of the timeline.
clips[i].timelineInTimecode	string	Timeline timecode of the first frame of this timeline clip serialised as string.

404 - No timeline / disk available.

DELETE /timelines/0

Clear the current playback timeline. Deprecated, prefer to use POST /timelines/0/clear

Response

204 - The timeline was cleared.

501 - The operation is not supported on this device.

POST /timelines/0

Add a clip to the timeline.

Parameters

This parameter can be one of the following types:

Add multiple media clips to the timeline with optional insertion point and clip in/out points.

Name	Type	Description
insertBefore	integer	Clip(s) will be inserted before the clip at this timeline clip index, where 0 inserts to the beginning of the timeline. If omitted, inserts to the end of the timeline.
clips (required)	array	List of clips to add to the timeline.
clips[i]	object	Clip to add to the timeline, optionally cropping the clip before adding to the timeline.
clips[i].clipUniqueId (required)	integer	Unique ID (clipUniqueId) of the media clip to add to the timeline.
clips[i].clipIn	integer	Insert this clip starting from this frame within the media clip. If omitted, starts from the beginning of the clip -- frame 0.
clips[i].frameCount	integer	Number of frames of this clip to add to the timeline. If omitted, use the whole clip, or the rest of the clip if clipIn was specified.

Add multiple media clips to the timeline with optional insertion point.

Name	Type	Description
insertBefore	integer	Clip(s) will be inserted before the clip at this timeline clip index, where 0 inserts to the beginning of the timeline. If omitted, inserts to the end of the timeline.
clips (required)	array	List of clips to add to the timeline.
clips[i]	integer	Unique ID (clipUniqueId) of the media clip to add to the timeline.

Add a single clip to the timeline with optional insertion point and clip in/out points.

Name	Type	Description
insertBefore	integer	Clip(s) will be inserted before the clip at this timeline clip index, where 0 inserts to the beginning of the timeline. If omitted, inserts to the end of the timeline.
clips (required)	object	Clip to add to the timeline, optionally cropping the clip before adding to the timeline.
clips.clipUniqueId (required)	integer	Unique ID (clipUniqueId) of the media clip to add to the timeline.
clips.clipIn	integer	Insert this clip starting from this frame within the media clip. If omitted, starts from the beginning of the clip -- frame 0.
clips.frameCount	integer	Number of frames of this clip to add to the timeline. If omitted, use the whole clip, or the rest of the clip if clipIn was specified.

Add a single clip to the timeline with optional insertion point.

Name	Type	Description
insertBefore	integer	Clip(s) will be inserted before the clip at this timeline clip index, where 0 inserts to the beginning of the timeline. If omitted, inserts to the end of the timeline.
clips (required)	integer	Unique ID (clipUniqueId) of the media clip to add to the timeline.

Response

204 - The clip was added to the timeline as specified.

501 - The operation is not supported on this device.

POST /timelines/0/add

Add a clip to the end of the timeline. Deprecated, use POST /timelines/0 to add clips within the timeline.

Parameters

This parameter can be one of the following types:

Add one clip to the end of the timeline.

Name	Type	Description
clips	integer	Unique ID (clipUniqueId) of the media clip to add to the timeline.

Add many clips to the end of the timeline.

Name	Type	Description
clips	array	List of clipUniqueIds of clips to add to end of timeline.
clips[i]	integer	Unique ID (clipUniqueId) of the media clip to add to the timeline.

Response

204 - The clip was added to the end of the timeline.

501 - The operation is not supported on this device.

POST /timelines/0/clear

Clear the playback timeline.

Response

204 - The timeline was cleared.

501 - The operation is not supported on this device.

DELETE /timelines/0/clips/{timelineClipIndex}

Remove the specified clip from the timeline.

Parameters

Name	Type	Description
{timelineClipIndex} (required)	integer	The (0-based) timeline clip index of the clip to remove from the timeline.

Response

204 - The specified clip was removed from the timeline.

501 - The operation is not supported on this device.

GET /timelines/0/selection

Get the current timeline selection.

Response

200 - Current timeline selection.

The response is JSON.

Timeline selection containing an array of clip IDs.

Name	Type	Description
clipIds	array	Array of clip IDs (clipUniqueId) currently selected for the remote selection timeline. A clip ID can be included multiple times. Empty array indicates there is no selection.
clipIds[i]	integer	Clip unique ID to include in selection.

404 - No timeline / disk available.

PUT /timelines/0/selection

Set the timeline selection.

Parameters

Timeline selection containing an array of clip IDs.

Name	Type	Description
clipIds	array	Array of clip IDs (clipUniqueId) currently selected for the remote selection timeline. A clip ID can be included multiple times. Empty array indicates there is no selection.
clipIds[i]	integer	Clip unique ID to include in selection.

Response

204 - Timeline selection was set successfully.

400 - Invalid clip ID provided or failed to set selection.

501 - The operation is not supported on this device.

DELETE /timelines/0/selection

Clear the timeline selection.

Response

204 - Timeline selection was cleared successfully.

400 - Failed to clear selection.

501 - The operation is not supported on this device.

Media Control API

API for controlling media devices in Blackmagic Design products.

GET /media/workingset

Get the list of media devices currently in the working set.

Response

200 - The list of media devices in the working set.

The response is JSON.

Name	Type	Description
size	integer	The fixed size of this device's working set.
workingset	array	The device's working set.
workingset[i]	object | null	Device within the working set. null if no device is present within the given working set slot.
workingset[i].index	integer	The index of this device in the working set.
workingset[i].activeDisk	boolean	True if this disk is currently active for recording.
workingset[i].volume	string	Volume name.
workingset[i].deviceName	string	Internal device name of this media device.
workingset[i].remainingRecordTime	integer	Remaining record time using current codec and video format in seconds.
workingset[i].totalSpace	integer	Total space on media device in bytes.
workingset[i].remainingSpace	integer	Remaining space on media device in bytes.
workingset[i].clipCount	integer	Number of clips currently on the device.

GET /media/slots

Get information about all available media slots.

Response

200 - Information about all media slots.

The response is JSON.

Name	Type	Description
	array	Information about all available media slots.
[i]	object	
[i].index	integer	The index of this slot in the device.
[i].type	string	The type of media slot. Possible values are: USB, SDCard, CFX, SSD, CFast, EmptyModule, MediaModule, NetworkShare, InternalDrive, Invalid.

GET /media/active

Get the currently active media device.

Response

200 - The current active media device.

The response is JSON.

The active media device, or null if there is no active media.

Name	Type	Description
workingsetIndex	integer	Working set index of the active media device.
deviceName	string	Device name of media device.

204 - No media is currently active.

PUT /media/active

Set the currently active media device.

Parameters

Name	Type	Description
workingsetIndex (required)	integer	Working set index of the media to make active.

Response

204 - The active media device was set successfully.

400 - Setting the currently active media device is not possible in the current state. The device may be blocked or not found.

500 - Internal server error occurred while setting the active device.

GET /media/devices/doformatSupportedFilesystems

Get the list of filesystems available to format a media device.

Response

200 - The list of filesystems permitted for formatting.

The response is JSON.

Name	Type	Description
	array	List of filesystems permitted for formatting media.
[i]	string	Filesystem serialised as string.

GET /media/devices/{deviceName}

Get information about a requested device.

Parameters

Name	Type	Description
{deviceName} (required)	string	Device name of the media device. Retrieved by "deviceName" member of GET /media/workingset or GET /media/active.

Response

200 - Information about the requested device.

The response is JSON.

Media device state.

Name	Type	Description
state	string	The current state of the media device. Possible values are: None, Scanning, Mounted, Unmounted, Uninitialised, Formatting, RaidComponent.

400 - Invalid device name.

404 - Device not found.

GET /media/devices/{deviceName}/doformat

Get a format key, used to format the device with a PUT request.

Parameters

Name	Type	Description
{deviceName} (required)	string	Device name of the media device. Retrieved by "deviceName" member of GET /media/workingset or GET /media/active.

Response

200 - Format prepared.

The response is JSON.

Name	Type	Description
deviceName	string	Device name of media device to format.
key	string	The key required to format this device, provide to PUT /media/devices/{deviceName}/doformat to perform format of media device.

400 - Cannot format the device. Device may not be in a valid state for formatting or is a network drive that cannot be formatted.

404 - Device not found.

PUT /media/devices/{deviceName}/doformat

Perform a format of the specified media device.

Parameters

Name	Type	Description
{deviceName} (required)	string	Device name of the media device. Retrieved by "deviceName" member of GET /media/workingset or GET /media/active.

Name	Type	Description
key (required)	string	The key used to format this device, retrieved from prepare format media request GET /media/devices/{deviceName}/doformat. Format key provided cannot be reused after successful format.
filesystem (required)	string	Filesystem to format to. Supported filesystems can be retrieved with GET /media/devices/doFormatSupportedFilesystems.
volume (required)	string	Volume name to set for the disk after format.

Response

204 - Format successful.

400 - Cannot format the device, invalid filesystem or key.

404 - Device not found.

Cloud Control API

API to manage Blackmagic Cloud projects and clip uploads.

GET /cloud/projects

List all projects.

Response

200 - Successfully retrieved the list of all projects.

The response is JSON.

Name	Type	Description
	array	
[i]	object	
[i].libraryID	string	Cloud ID of the library containing this project.
[i].name	string	Name of the project.
[i].private	boolean	True if the project is private.
[i].shared	boolean	True if the project is shared.
[i].clips	array	List of clips associated with the project.
[i].clips[i]	string	
[i].status	object	
[i].status.numClipsRequested	integer	Number of clips requested for upload.
[i].status.numClipsComplete	integer	Number of clips that have completed uploading.
[i].status.uploadPercent	integer	Percentage of upload completion.

Name	Type	Description
[i].status.numClipsPaused	integer	Number of clips paused in upload queue.
[i].status.outOfSpace	boolean	True if the project has run out of space in the cloud.
[i].status.secsRemaining	integer	Estimated seconds remaining until upload is completed. Value of -1 means calculation in progress.
[i].status.currentByteRate	integer	Current byte rate of the upload process.

GET /cloud/projects/active

Retrieve data of the active project.

Response

200 - Successfully retrieved the active project's data.

The response is JSON.

Name	Type	Description
libraryID	string	Cloud ID of the library containing this project.
name	string	Name of the project.
private	boolean	True if the project is private.
shared	boolean	True if the project is shared.
clips	array	List of clips associated with the project.
clips[i]	string	
status	object	
status.numClipsRequested	integer	Number of clips requested for upload.
status.numClipsComplete	integer	Number of clips that have completed uploading.
status.uploadPercent	integer	Percentage of upload completion.
status.numClipsPaused	integer	Number of clips paused in upload queue.
status.outOfSpace	boolean	True if the project has run out of space in the cloud.
status.secsRemaining	integer	Estimated seconds remaining until upload is completed. Value of -1 means calculation in progress.
status.currentByteRate	integer	Current byte rate of the upload process.

404 - No active project.

GET /cloud/projects/{projectID}

Retrieve specific project data by project ID.

Parameters

Name	Type	Description
{projectID} (required)	integer	Unique identifier of the Blackmagic Cloud project.

Response

200 - Successfully retrieved the project data.

The response is JSON.

Name	Type	Description
libraryID	string	Cloud ID of the library containing this project.
name	string	Name of the project.
private	boolean	True if the project is private.
shared	boolean	True if the project is shared.
clips	array	List of clips associated with the project.
clips[i]	string	
status	object	
status.numClipsRequested	integer	Number of clips requested for upload.
status.numClipsComplete	integer	Number of clips that have completed uploading.
status.uploadPercent	integer	Percentage of upload completion.
status.numClipsPaused	integer	Number of clips paused in upload queue.
status.outOfSpace	boolean	True if the project has run out of space in the cloud.
status.secsRemaining	integer	Estimated seconds remaining until upload is completed. Value of -1 means calculation in progress.
status.currentByteRate	integer	Current byte rate of the upload process.

404 - Project not found.

GET /cloud/clips

List all clips available for upload.

Response

200 - Successfully retrieved the list of all clips.

The response is JSON.

Name	Type	Description
	array	
[i]	string	REST path to the clip (deviceName/path).

GET /cloud/clips/activeUploading

Retrieve data of actively uploading clips.

Response

200 - Successfully retrieved the list of actively uploading clips.

The response is JSON.

Name	Type	Description
	array	
[i]	object	
[i].path	string	REST path to the clip (deviceName/path).
[i].projectID	integer	ID of the project this clip is associated with.
[i].status	object	
[i].status.projectID	integer	ID of the project this status is for.
[i].status.outOfSpace	boolean	True if the project has run out of space in the cloud.
[i].status.growingFile	boolean	True if the clip is still being recorded/modified.
[i].status.originalUploadState	string	Upload state of the original clip. Possible values are: Unqueued, Paused, Queued, Uploading, Uploaded, Failed, Unknown.
[i].status.proxyUploadState	string	Upload state of the proxy clip. Possible values are: Unqueued, Paused, Queued, Uploading, Uploaded, Failed, Unknown.
[i].status.originalClipTotalSize	integer	Total size of the original clip in bytes.
[i].status.proxyClipTotalSize	integer	Total size of the proxy clip in bytes.
[i].status.originalClipCompletedSize	integer	Completed upload size of the original clip in bytes.
[i].status.proxyClipCompletedSize	integer	Completed upload size of the proxy clip in bytes.
[i].status.secsRemaining	integer	Estimated seconds remaining until upload is completed. Value of -1 means calculation in progress.

GET /cloud/clips/{deviceName}/{path}

Retrieve upload status for a specific clip.

Parameters

Name	Type	Description
{deviceName} (required)	string	Name of the device where the clip is stored.
{path} (required)	string	Path to the clip.

Response

200 - Successfully retrieved the clip upload status for all associated projects.

The response is JSON.

Name	Type	Description
	array	
[i]	object	
[i].path	string	REST path to the clip (deviceName/path).
[i].projectID	integer	ID of the project this clip is associated with.
[i].status	object	
[i].status.projectID	integer	ID of the project this status is for.
[i].status.outOfSpace	boolean	True if the project has run out of space in the cloud.
[i].status.growingFile	boolean	True if the clip is still being recorded/modified.
[i].status.originalUploadState	string	Upload state of the original clip. Possible values are: Unqueued, Paused, Queued, Uploading, Uploaded, Failed, Unknown.
[i].status.proxyUploadState	string	Upload state of the proxy clip. Possible values are: Unqueued, Paused, Queued, Uploading, Uploaded, Failed, Unknown.
[i].status.originalClipTotalSize	integer	Total size of the original clip in bytes.
[i].status.proxyClipTotalSize	integer	Total size of the proxy clip in bytes.
[i].status.originalClipCompletedSize	integer	Completed upload size of the original clip in bytes.
[i].status.proxyClipCompletedSize	integer	Completed upload size of the proxy clip in bytes.
[i].status.secsRemaining	integer	Estimated seconds remaining until upload is completed. Value of -1 means calculation in progress.

400 - Missing deviceName or path parameter.

404 - Clip not found.

Slate Control API

API to manage digital slate data for Blackmagic Design products.

GET /slates/nextClip

Retrieve the digital slate for the next clip.

Response

200 - Returns the slate data for the next clip.

The response is JSON.

Name	Type	Description
clip	object	
clip.clipName	string	Name of the clip file.
clip.reel	integer	Reel number (1-999).
clip.scene	string	Scene identifier. Must include at least one non-zero, non-space, non-punctuation character. Numeric values cannot exceed 999.
clip.sceneLocation	string	Location of the scene (interior or exterior). Possible values are: Interior, Exterior.
clip.sceneTime	string	Time of day for the scene. Possible values are: Day, Night.
clip.shotType	string	Type of shot. Possible values are: None, WS, MS, MCU, CU, BCU, ECU.
clip.slateFor	string	Indicates whether this slate is for an existing clip or the next clip to be recorded. Possible values are: Clip, Next Clip.
clip.take	integer	Take number (1-99).
clip.takeType	string	Type of take. Possible values are: None, PU, VFX, SER.
clip.goodTake	boolean	Flag indicating if this was marked as a good take. Only available for existing clips, not for next clip.
lens	object	Lens-related metadata.
lens.lensType	string	Type or model of the lens.
lens.iris	string	Iris/aperture setting. May not be editable if using a lens that reports iris electronically.
lens.focalLength	string	Focal length of the lens. May not be editable if using a lens that reports focal length electronically.
lens.distance	string	Focus distance. May not be editable if using a lens that reports focus distance electronically.
lens.filter	string	Filter used on the lens.
project	object	Project-related metadata.
project.projectName	string	Name of the project. May not be editable if connected via HDMI CEC.
project.director	string	Name of the director.
project.camera	string	Name/identifier for this camera. May not be editable if connected via HDMI CEC.
project.cameraOperator	string	Name of the camera operator.

409 - Slate data is not available.

PUT /slates/nextClip

Update the slate data for the next clip.

Parameters

Name	Type	Description
clip	object	
clip.reel	integer	Reel number (1-999).
clip.scene	string	Scene identifier. Must include at least one non-zero, non-space, non-punctuation character. Numeric values cannot exceed 999.
clip.take	integer	Take number (1-99).
clip.shotType	string	Type of shot. Possible values are: None, WS, MS, MCU, CU, BCU, ECU.
clip.takeType	string	Type of take. Possible values are: None, PU, VFX, SER.
clip.sceneLocation	string	Location of the scene (interior or exterior). Possible values are: Interior, Exterior.
clip.sceneTime	string	Time of day for the scene. Possible values are: Day, Night.
clip.goodTake	boolean	Flag indicating if this was a good take. Cannot be set for next clip.
lens	object	Lens-related metadata.
lens.lensType	string	Type or model of the lens.
lens.iris	string	Iris/aperture setting. May not be editable if using a lens that reports iris electronically.
lens.focalLength	string	Focal length of the lens. May not be editable if using a lens that reports focal length electronically.
lens.distance	string	Focus distance. May not be editable if using a lens that reports focus distance electronically.
lens.filter	string	Filter used on the lens.
project	object	Project-related metadata.
project.projectName	string	Name of the project. May not be editable if connected via HDMI CEC.
project.director	string	Name of the director.
project.camera	string	Name/identifier for this camera. May not be editable if connected via HDMI CEC.
project.cameraOperator	string	Name of the camera operator.

Response

200 - Successfully updated the slate data.

The response is JSON.

Name	Type	Description
clip	object	
clip.clipName	string	Name of the clip file.
clip.reel	integer	Reel number (1-999).
clip.scene	string	Scene identifier. Must include at least one non-zero, non-space, non-punctuation character. Numeric values cannot exceed 999.

Name	Type	Description
clip.sceneLocation	string	Location of the scene (interior or exterior). Possible values are: Interior, Exterior.
clip.sceneTime	string	Time of day for the scene. Possible values are: Day, Night.
clip.shotType	string	Type of shot. Possible values are: None, WS, MS, MCU, CU, BCU, ECU.
clip.slateFor	string	Indicates whether this slate is for an existing clip or the next clip to be recorded. Possible values are: Clip, Next Clip.
clip.take	integer	Take number (1-99).
clip.takeType	string	Type of take. Possible values are: None, PU, VFX, SER.
clip.goodTake	boolean	Flag indicating if this was marked as a good take. Only available for existing clips, not for next clip.
lens	object	Lens-related metadata.
lens.lensType	string	Type or model of the lens.
lens.iris	string	Iris/aperture setting. May not be editable if using a lens that reports iris electronically.
lens.focalLength	string	Focal length of the lens. May not be editable if using a lens that reports focal length electronically.
lens.distance	string	Focus distance. May not be editable if using a lens that reports focus distance electronically.
lens.filter	string	Filter used on the lens.
project	object	Project-related metadata.
project.projectName	string	Name of the project. May not be editable if connected via HDMI CEC.
project.director	string	Name of the director.
project.camera	string	Name/identifier for this camera. May not be editable if connected via HDMI CEC.
project.cameraOperator	string	Name of the camera operator.

400 - Invalid data in request.

409 - Partial update with errors.

The response is JSON.

Name	Type	Description
error	string	
details	array	
details[i]	object	
details[i].field	string	
details[i].message	string	

500 - Internal server error.

GET /slates/takeAutoIncrement

Get the auto-increment take setting.

Response

200 - Returns the auto-increment take setting.

The response is JSON.

Name	Type	Description
enabled	boolean	

409 - Slate is not available.

PUT /slates/takeAutoIncrement

Update the auto-increment take setting.

Parameters

Name	Type	Description
enabled (required)	boolean	Enable/disable auto-increment take setting

Response

200 - Successfully updated the setting.

400 - Invalid request data.

409 - Slate is not available.

500 - Internal server error.

POST /slates/nextClip/resetProjectData

Reset the project data for the next clip's slate.

Response

200 - Project data reset successfully.

409 - Slate is not available.

500 - Internal server error.

POST /slates/clips/{deviceName}/{path}/resetProjectData

Reset the project data for a specific clip's slate.

Parameters

Name	Type	Description
{deviceName} (required)	string	Name of the device where the clip is stored. This is the same as the web browser's device name.
{path} (required)	string	Path to the clip.

Response

200 - Project data reset successfully.

404 - Clip not found.

409 - Slate is not available.

500 - Internal server error.

POST /slates/nextClip/resetLensData

Reset the lens data for the next clip's slate.

Response

200 - Lens data reset successfully.

409 - Slate is not available.

500 - Internal server error.

POST /slates/clips/{deviceName}/{path}/resetLensData

Reset the lens data for a specific clip's slate.

Parameters

Name	Type	Description
{deviceName} (required)	string	Name of the device where the clip is stored. This is the same as the web browser's device name.
{path} (required)	string	Path to the clip.

Response

200 - Lens data reset successfully.

404 - Clip not found.

409 - Slate is not available.

500 - Internal server error.

GET /slates/clips/{deviceName}/{path}

Retrieve slate data for a specific clip.

Parameters

Name	Type	Description
{deviceName} (required)	string	Name of the device where the clip is stored. This is the same as the web browser's device name.
{path} (required)	string	Path to the clip.

Response

200 - Returns the slate data for the specified clip.

The response is JSON.

Name	Type	Description
clip	object	
clip.clipName	string	Name of the clip file.
clip.reel	integer	Reel number (1-999).
clip.scene	string	Scene identifier. Must include at least one non-zero, non-space, non-punctuation character. Numeric values cannot exceed 999.
clip.sceneLocation	string	Location of the scene (interior or exterior). Possible values are: Interior, Exterior.
clip.sceneTime	string	Time of day for the scene. Possible values are: Day, Night.
clip.shotType	string	Type of shot. Possible values are: None, WS, MS, MCU, CU, BCU, ECU.

Name	Type	Description
clip.slateFor	string	Indicates whether this slate is for an existing clip or the next clip to be recorded. Possible values are: Clip, Next Clip.
clip.take	integer	Take number (1-99).
clip.takeType	string	Type of take. Possible values are: None, PU, VFX, SER.
clip.goodTake	boolean	Flag indicating if this was marked as a good take. Only available for existing clips, not for next clip.
lens	object	Lens-related metadata.
lens.lensType	string	Type or model of the lens.
lens.iris	string	Iris/aperture setting. May not be editable if using a lens that reports iris electronically.
lens.focalLength	string	Focal length of the lens. May not be editable if using a lens that reports focal length electronically.
lens.distance	string	Focus distance. May not be editable if using a lens that reports focus distance electronically.
lens.filter	string	Filter used on the lens.
project	object	Project-related metadata.
project.projectName	string	Name of the project. May not be editable if connected via HDMI CEC.
project.director	string	Name of the director.
project.camera	string	Name/identifier for this camera. May not be editable if connected via HDMI CEC.
project.cameraOperator	string	Name of the camera operator.

404 - Clip not found.

409 - Slate is not available.

PUT /slates/clips/{deviceName}/{path}

Update the slate data for a specific clip.

Parameters

Name	Type	Description
{deviceName} (required)	string	Name of the device where the clip is stored. This is the same as the web browser's device name.
{path} (required)	string	Path to the clip.

Name	Type	Description
clip	object	
clip.reel	integer	Reel number (1-999).
clip.scene	string	Scene identifier. Must include at least one non-zero, non-space, non-punctuation character. Numeric values cannot exceed 999.
clip.take	integer	Take number (1-99).
clip.shotType	string	Type of shot. Possible values are: None, WS, MS, MCU, CU, BCU, ECU.
clip.takeType	string	Type of take. Possible values are: None, PU, VFX, SER.

Name	Type	Description
clip.sceneLocation	string	Location of the scene (interior or exterior). Possible values are: Interior, Exterior.
clip.sceneTime	string	Time of day for the scene. Possible values are: Day, Night.
clip.goodTake	boolean	Flag indicating if this was a good take. Cannot be set for next clip.
lens	object	Lens-related metadata.
lens.lensType	string	Type or model of the lens.
lens.iris	string	Iris/aperture setting. May not be editable if using a lens that reports iris electronically.
lens.focalLength	string	Focal length of the lens. May not be editable if using a lens that reports focal length electronically.
lens.distance	string	Focus distance. May not be editable if using a lens that reports focus distance electronically.
lens.filter	string	Filter used on the lens.
project	object	Project-related metadata.
project.projectName	string	Name of the project. May not be editable if connected via HDMI CEC.
project.director	string	Name of the director.
project.camera	string	Name/identifier for this camera. May not be editable if connected via HDMI CEC.
project.cameraOperator	string	Name of the camera operator.

Response

200 - Successfully updated the slate data.

The response is JSON.

Name	Type	Description
clip	object	
clip.clipName	string	Name of the clip file.
clip.reel	integer	Reel number (1-999).
clip.scene	string	Scene identifier. Must include at least one non-zero, non-space, non-punctuation character. Numeric values cannot exceed 999.
clip.sceneLocation	string	Location of the scene (interior or exterior). Possible values are: Interior, Exterior.
clip.sceneTime	string	Time of day for the scene. Possible values are: Day, Night.
clip.shotType	string	Type of shot. Possible values are: None, WS, MS, MCU, CU, BCU, ECU.
clip.slateFor	string	Indicates whether this slate is for an existing clip or the next clip to be recorded. Possible values are: Clip, Next Clip.
clip.take	integer	Take number (1-99).
clip.takeType	string	Type of take. Possible values are: None, PU, VFX, SER.
clip.goodTake	boolean	Flag indicating if this was marked as a good take. Only available for existing clips, not for next clip.
lens	object	Lens-related metadata.
lens.lensType	string	Type or model of the lens.

Name	Type	Description
lens.iris	string	Iris/aperture setting. May not be editable if using a lens that reports iris electronically.
lens.focalLength	string	Focal length of the lens. May not be editable if using a lens that reports focal length electronically.
lens.distance	string	Focus distance. May not be editable if using a lens that reports focus distance electronically.
lens.filter	string	Filter used on the lens.
project	object	Project-related metadata.
project.projectName	string	Name of the project. May not be editable if connected via HDMI CEC.
project.director	string	Name of the director.
project.camera	string	Name/identifier for this camera. May not be editable if connected via HDMI CEC.
project.cameraOperator	string	Name of the camera operator.

400 - Invalid data in request.

404 - Clip not found.

409 - Partial update with errors.

The response is JSON.

Name	Type	Description
error	string	
details	array	
details[i]	object	
details[i].field	string	
details[i].message	string	

GET /slates/lastClip

Retrieve slate data for the last recorded clip.

Response

200 - Returns the slate data for the last recorded clip.

The response is JSON.

Name	Type	Description
clip	object	
clip.clipName	string	Name of the clip file.
clip.reel	integer	Reel number (1-999).
clip.scene	string	Scene identifier. Must include at least one non-zero, non-space, non-punctuation character. Numeric values cannot exceed 999.
clip.sceneLocation	string	Location of the scene (interior or exterior). Possible values are: Interior, Exterior.
clip.sceneTime	string	Time of day for the scene. Possible values are: Day, Night.
clip.shotType	string	Type of shot. Possible values are: None, WS, MS, MCU, CU, BCU, ECU.
clip.slateFor	string	Indicates whether this slate is for an existing clip or the next clip to be recorded. Possible values are: Clip, Next Clip.
clip.take	integer	Take number (1-99).
clip.takeType	string	Type of take. Possible values are: None, PU, VFX, SER.
clip.goodTake	boolean	Flag indicating if this was marked as a good take. Only available for existing clips, not for next clip.
lens	object	Lens-related metadata.
lens.lensType	string	Type or model of the lens.
lens.iris	string	Iris/aperture setting. May not be editable if using a lens that reports iris electronically.
lens.focalLength	string	Focal length of the lens. May not be editable if using a lens that reports focal length electronically.
lens.distance	string	Focus distance. May not be editable if using a lens that reports focus distance electronically.
lens.filter	string	Filter used on the lens.
project	object	Project-related metadata.
project.projectName	string	Name of the project. May not be editable if connected via HDMI CEC.
project.director	string	Name of the director.
project.camera	string	Name/identifier for this camera. May not be editable if connected via HDMI CEC.
project.cameraOperator	string	Name of the camera operator.

409 - Slate is not available or no clip has been recorded.

PUT /slates/lastClip

Update the slate data for the last recorded clip.

Parameters

Name	Type	Description
clip	object	
clip.reel	integer	Reel number (1-999).
clip.scene	string	Scene identifier. Must include at least one non-zero, non-space, non-punctuation character. Numeric values cannot exceed 999.
clip.take	integer	Take number (1-99).
clip.shotType	string	Type of shot. Possible values are: None, WS, MS, MCU, CU, BCU, ECU.
clip.takeType	string	Type of take. Possible values are: None, PU, VFX, SER.
clip.sceneLocation	string	Location of the scene (interior or exterior). Possible values are: Interior, Exterior.
clip.sceneTime	string	Time of day for the scene. Possible values are: Day, Night.
clip.goodTake	boolean	Flag indicating if this was a good take. Cannot be set for next clip.
lens	object	Lens-related metadata.
lens.lensType	string	Type or model of the lens.
lens.iris	string	Iris/aperture setting. May not be editable if using a lens that reports iris electronically.
lens.focalLength	string	Focal length of the lens. May not be editable if using a lens that reports focal length electronically.
lens.distance	string	Focus distance. May not be editable if using a lens that reports focus distance electronically.
lens.filter	string	Filter used on the lens.
project	object	Project-related metadata.
project.projectName	string	Name of the project. May not be editable if connected via HDMI CEC.
project.director	string	Name of the director.
project.camera	string	Name/identifier for this camera. May not be editable if connected via HDMI CEC.
project.cameraOperator	string	Name of the camera operator.

Response

200 - Successfully updated the slate data.

The response is JSON.

Name	Type	Description
clip	object	
clip.clipName	string	Name of the clip file.
clip.reel	integer	Reel number (1-999).
clip.scene	string	Scene identifier. Must include at least one non-zero, non-space, non-punctuation character. Numeric values cannot exceed 999.

Name	Type	Description
clip.sceneLocation	string	Location of the scene (interior or exterior). Possible values are: Interior, Exterior.
clip.sceneTime	string	Time of day for the scene. Possible values are: Day, Night.
clip.shotType	string	Type of shot. Possible values are: None, WS, MS, MCU, CU, BCU, ECU.
clip.slateFor	string	Indicates whether this slate is for an existing clip or the next clip to be recorded. Possible values are: Clip, Next Clip.
clip.take	integer	Take number (1-99).
clip.takeType	string	Type of take. Possible values are: None, PU, VFX, SER.
clip.goodTake	boolean	Flag indicating if this was marked as a good take. Only available for existing clips, not for next clip.
lens	object	Lens-related metadata.
lens.lensType	string	Type or model of the lens.
lens.iris	string	Iris/aperture setting. May not be editable if using a lens that reports iris electronically.
lens.focalLength	string	Focal length of the lens. May not be editable if using a lens that reports focal length electronically.
lens.distance	string	Focus distance. May not be editable if using a lens that reports focus distance electronically.
lens.filter	string	Filter used on the lens.
project	object	Project-related metadata.
project.projectName	string	Name of the project. May not be editable if connected via HDMI CEC.
project.director	string	Name of the director.
project.camera	string	Name/identifier for this camera. May not be editable if connected via HDMI CEC.
project.cameraOperator	string	Name of the camera operator.

400 - Invalid data in request.

409 - Partial update with errors or no clip has been recorded.

The response is JSON.

Name	Type	Description
error	string	
details	array	
details[i]	object	
details[i].field	string	
details[i].message	string	

POST /slates/lastClip/resetProjectData

Reset the project data for the last recorded clip's slate.

Response

200 - Project data reset successfully.

409 - Slate is not available or no clip has been recorded.

POST /slates/lastClip/resetLensData

Reset the lens data for the last recorded clip's slate.

Response

200 - Lens data reset successfully.

409 - Slate is not available or no clip has been recorded.

500 - Internal server error.

GET /slates/{target}/{category}/{property}

Get individual slate property value.

Parameters

Name	Type	Description
{target} (required)	string	Target slate (nextClip for upcoming recording, lastClip for most recent recording)
{category} (required)	string	Category of the property
{property} (required)	string	Property name within the category: - clip: reel, scene, shotType, take, takeType, sceneLocation, sceneTime, goodTake - lens: lensType, iris, focalLength, distance, filter - project: projectName, director, camera, cameraOperator

Response

200 - Property value retrieved successfully.

The response is JSON.

Name	Type	Description
value		The property value

400 - Invalid property path.

404 - Property not found.

409 - Slate is not available.

500 - Internal server error.

PUT /slates/{target}/{category}/{property}

Set individual slate property value.

Parameters

Name	Type	Description
{target} (required)	string	Target slate (nextClip for upcoming recording, lastClip for most recent recording)
{category} (required)	string	Category of the property
{property} (required)	string	Property name within the category: - clip: reel, scene, shotType, take, takeType, sceneLocation, sceneTime, goodTake - lens: lensType, iris, focalLength, distance, filter - project: projectName, director, camera, cameraOperator

Name	Type	Description
value (required)		The property value to set

Response

200 - Property value updated successfully.

400 - Invalid property value or path.

404 - Property not found.

409 - Slate is not available or property cannot be modified.

500 - Internal server error.

Preset Control API

API For controlling the presets on Blackmagic Design products

GET /presets

Get the list of the presets on the camera

Response

200 - OK

The response is JSON.

Name	Type	Description
presets	array	List of the presets on the camera (.cset files)
presets[i]	string	

POST /presets

Send a preset file to the camera

Response

200 - OK

The response is JSON.

Name	Type	Description
presetAdded	string	Name of the preset uploaded (without .cset extension)

400 - Bad request - missing Content-Disposition header or filename

GET /presets/active

Get the currently active preset on the camera

Response

200 - OK

The response is JSON.

Name	Type	Description
preset	string	Name of the active preset (with .cset extension, or 'default')

PUT /presets/active

Set the active preset on the camera

Parameters

Name	Type	Description
preset	string	Name of the active preset (with .cset extension, or 'default')

Response

204 - No Content

404 - Preset file not found

PARAMETERS /presets/{presetName}

GET /presets/{presetName}

Download the preset file

Response

200 - OK

The response is a binary file.

404 - File does not exist

PUT /presets/{presetName}

Save current camera state as a preset

Response

204 - No Content

DELETE /presets/{presetName}

Delete a preset from the camera

Response

204 - No Content

404 - Preset file not found

Audio Control API

API For controlling audio on Blackmagic Design Cameras

GET /audio/channels

Get the total number of audio channels available

Response

200 - Returns the total number of channels

The response is JSON.

Name	Type	Description
channels	integer	Total number of audio channels available

GET /audio/supportedInputs

Get the list of supported audio inputs

Response

200 - List of all supported audio inputs

The response is JSON.

Name	Type	Description
	array	
[i]	string	A supported audio input

GET /audio/channel/{channelIndex}/input

Get the audio input (source and type) for the selected channel

Parameters

Name	Type	Description
{channelIndex} (required)	integer	The index of the channel that its input is being controlled. (Channels index from 0)

Response

200 - Currently selected input

The response is JSON.

Name	Type	Description
input (required)	string	Audio input source and type

404 - Channel does not exist

PUT /audio/channel/{channelIndex}/input

Set the audio input for the selected channel

Parameters

Name	Type	Description
{channelIndex} (required)	integer	The index of the channel that its input is being controlled. (Channels index from 0)

Name	Type	Description
input (required)	string	Audio input source and type

Response

204 - No Content

400 - Invalid audio input

404 - Channel does not exist

500 - Internal server error

GET /audio/channel/{channelIndex}/input/description

Get the description of the current input of the selected channel

Parameters

Name	Type	Description
{channelIndex} (required)	integer	The index of the channel that its input is being controlled. (Channels index from 0)

Response

200 - Description of the current input of the selected channel

The response is JSON.

Name	Type	Description
description	object	
description.gainRange	object	
description.gainRange.Min	number	The minimum gain value in dB
description.gainRange.Max	number	The maximum gain value in dB
description.capabilities	array	
description.capabilities[i]	object	
description.capabilities[i]. PhantomPower	boolean	Input supports setting of phantom power
description.capabilities[i]. LowCutFilter	boolean	Input supports setting of low cut filter
description.capabilities[i].Padding	object	
description.capabilities[i].Padding. available	boolean	Input supports setting of padding
description.capabilities[i].Padding. forced	boolean	Padding is forced to be set for the input
description.capabilities[i].Padding. value	number	Value of the padding in dB

404 - Channel does not exist

GET /audio/channel/{channelIndex}/supportedInputs

Get the list of supported inputs and their availability to switch to for the selected channel

Parameters

Name	Type	Description
{channelIndex} (required)	integer	The index of the channel that its supported inputs are being queried. (Channels index from 0)

Response

200 - The list of supported inputs

The response is JSON.

Name	Type	Description
	array	
[i]	object	
[i].input	string	Input name
[i].available	boolean	Is the input available to be switched into from the current input for the selected channel

404 - Channel does not exist

GET /audio/channel/{channelIndex}/level

Get the audio input level for the selected channel

Parameters

Name	Type	Description
{channelIndex} (required)	integer	The index of the channel that its input is being controlled. (Channels index from 0)

Response

200 - Currently set level for the selected channel

The response is JSON.

Name	Type	Description
gain	number	Gain value in dB
normalized	number	Normalized level value between 0.0 and 1.0

404 - Channel does not exist

PUT /audio/channel/{channelIndex}/level

Set the audio input level for the selected channel

Parameters

Name	Type	Description
{channelIndex} (required)	integer	The index of the channel that its input is being controlled. (Channels index from 0)

Name	Type	Description
gain	number	Gain value in dB
normalized	number	Normalized level value between 0.0 and 1.0

Response

204 - No Content

400 - Invalid input or value out of range

404 - Channel does not exist

500 - Internal server error

GET /audio/channel/{channelIndex}/phantomPower

Get the audio input phantom power status for the selected channel

Parameters

Name	Type	Description
{channelIndex} (required)	integer	The index of the channel that its input is being controlled. (Channels index from 0)

Response

200 - Currently set phantom power for the selected channel

The response is JSON.

Name	Type	Description
enabled (required)	boolean	Phantom power enabled state

404 - Channel does not exist

PUT /audio/channel/{channelIndex}/phantomPower

Set the audio phantom power for the selected channel

Parameters

Name	Type	Description
{channelIndex} (required)	integer	The index of the channel that its input is being controlled. (Channels index from 0)

Name	Type	Description
enabled (required)	boolean	Phantom power enabled state

Response

204 - No Content

400 - Phantom power is not supported for this input

404 - Channel does not exist

500 - Internal server error

GET /audio/channel/{channelIndex}/padding

Get the audio input padding status for the selected channel

Parameters

Name	Type	Description
{channelIndex} (required)	integer	The index of the channel that its input is being controlled. (Channels index from 0)

Response

200 - Currently set padding for the selected channel

The response is JSON.

Name	Type	Description
enabled (required)	boolean	Padding enabled state

404 - Channel does not exist

PUT /audio/channel/{channelIndex}/padding

Set the audio input padding for the selected channel

Parameters

Name	Type	Description
{channelIndex} (required)	integer	The index of the channel that its input is being controlled. (Channels index from 0)

Name	Type	Description
enabled (required)	boolean	Padding enabled state

Response

204 - No Content

400 - Padding is not supported or is forced for this input

404 - Channel does not exist

500 - Internal server error

GET /audio/channel/{channelIndex}/lowCutFilter

Get the audio input low cut filter status for the selected channel

Parameters

Name	Type	Description
{channelIndex} (required)	integer	The index of the channel that its input is being controlled. (Channels index from 0)

Response

200 - Currently set low cut filter for the selected channel

The response is JSON.

Name	Type	Description
enabled (required)	boolean	Low cut filter enabled state

404 - Channel does not exist

PUT /audio/channel/{channelIndex}/lowCutFilter

Set the audio input low cut filter for the selected channel

Parameters

Name	Type	Description
{channelIndex} (required)	integer	The index of the channel that its input is being controlled. (Channels index from 0)

Name	Type	Description
enabled (required)	boolean	Low cut filter enabled state

Response

204 - No Content

400 - Low cut filter is not supported for this input

404 - Channel does not exist

500 - Internal server error

GET /audio/channel/{channelIndex}/available

Get the audio input's current availability for the selected channel

Parameters

Name	Type	Description
{channelIndex} (required)	integer	The index of the channel that its input is being controlled. (Channels index from 0)

Response

200 - Currently set availability for the selected channel

The response is JSON.

Name	Type	Description
available	boolean	Whether the input is currently available

404 - Channel does not exist

Lens Control API

API For controlling the lens on Blackmagic Design products

GET /lens/iris

Get lens' aperture

Response

200 - OK

The response is JSON.

Name	Type	Description
continuousApertureAutoExposure	boolean	Is Aperture controlled by auto exposure
apertureStop	number	Aperture stop value
normalised	number	Normalised value
apertureNumber	integer	Aperture number

PUT /lens/iris

Set lens' aperture

Parameters

Name	Type	Description
apertureStop	number	Aperture stop value
normalised	number	Normalised value
apertureNumber	integer	Aperture number
adjustmentStep	integer	Signed value for relative aperture adjustment

Response

204 - No Content

400 - Bad Request if out of range value is provided

403 - Forbidden if lens iris is not controllable or is controlled by auto exposure

GET /lens/zoom

Get lens' zoom

Response

200 - OK

The response is JSON.

Name	Type	Description
focalLength	integer	Focal length in mm
normalised	number	Normalised value

PUT /lens/zoom

Set lens' zoom

Parameters

Name	Type	Description
focalLength	integer	Focal length in mm
normalised	number	Normalised value
adjustmentFocalLength	integer	Signed value for relative focal length adjustment
adjustmentNormalised	number	Signed normalized value for relative zoom adjustment

Response

204 - No Content

400 - Bad Request if out of range value is provided

403 - Forbidden if lens zoom is not controllable

GET /lens/focus

Get lens' focus

Response

200 - OK

The response is JSON.

Name	Type	Description
normalised	number	Normalised value

PUT /lens/focus

Set lens' focus

Parameters

Name	Type	Description
normalised	number	Normalised value
focusDistance	integer	Focus distance value

Response

204 - No Content

400 - Bad Request if out of range value is provided

PUT /lens/focus/doAutoFocus

Perform auto focus

Parameters

Name	Type	Description
position	object	
position.x	number	Normalized x coordinate for autofocus ROI
position.y	number	Normalized y coordinate for autofocus ROI

Response

204 - No Content

400 - Bad Request if out of range value is provided

403 - Forbidden if lens focus is not controllable

GET /lens/opticalImageStabilization

Get optical image stabilization status

Response

200 - OK

The response is JSON.

Name	Type	Description
enabled	boolean	Whether optical image stabilization is enabled
controlAvailable	boolean	Whether optical image stabilization can be controlled

501 - Not Implemented if optical image stabilization is not supported on this product

PUT /lens/opticalImageStabilization

Enable or disable optical image stabilization

Parameters

Name	Type	Description
enabled	boolean	Enable or disable optical image stabilization

Response

204 - No Content

403 - Forbidden if optical image stabilization is not controllable in the current state

501 - Not Implemented if optical image stabilization is not supported on this product

GET /lens/iris/description

Get detailed description of lens' iris capabilities

Response

200 - OK

The response is JSON.

Name	Type	Description
controllable	boolean	If the iris can be controlled
apertureStop	object	
apertureStop.min	number	Minimum aperture stop
apertureStop.max	number	Maximum aperture stop

GET /lens/zoom/description

Get detailed description of lens' zoom capabilities

Response

200 - OK

The response is JSON.

Name	Type	Description
controllable	boolean	If the zoom can be controlled
focalLength	object	
focalLength.adjustable	boolean	If focal length is adjustable
focalLength.min	integer	Minimum focal length
focalLength.max	integer	Maximum focal length

GET /lens/focus/description

Get detailed description of lens' focus capabilities

Response

200 - OK

The response is JSON.

Name	Type	Description
controllable	boolean	If the focus can be controlled
focusDistance	object	
focusDistance.adjustable	boolean	If focus distance is adjustable
focusDistance.min	number	Minimum focus distance
focusDistance.max	number	Maximum focus distance

Video Control API

API For controlling the video on Blackmagic Design products

GET /video/iso

Get current ISO

Response

200 - OK

The response is JSON.

Name	Type	Description
iso	integer	Current ISO value

PUT /video/iso

Set current ISO

Parameters

Name	Type	Description
iso (required)	integer	ISO value to set

Response

204 - No Content

403 - ISO cannot be changed in the current state

500 - Internal server error

GET /video/supportedISOs

Get the list of supported ISO settings

Response

200 - List of supported ISO values

The response is JSON.

Name	Type	Description
supportedISOs	array	Array of supported ISO values
supportedISOs[i]	integer	

GET /video/gain

Get current gain value in decibels

Response

200 - OK

The response is JSON.

Name	Type	Description
gain	integer	Current gain value in decibels

PUT /video/gain

Set current gain value

Parameters

Name	Type	Description
gain (required)	integer	Gain value in decibels to set

Response

204 - No Content

403 - Gain cannot be changed in the current state

500 - Internal server error

GET /video/supportedGains

Get the list of supported gain settings in decibels

Response

200 - List of supported gain values in decibels

The response is JSON.

Name	Type	Description
supportedGains	array	Array of supported gain values in decibels
supportedGains[i]	integer	

GET /video/whiteBalance

Get current white balance

Response

200 - OK

The response is JSON.

Name	Type	Description
whiteBalance	integer	Current white balance

PUT /video/whiteBalance

Set current white balance

Parameters

Name	Type	Description
whiteBalance (required)	integer	White balance to set

Response

204 - No Content

400 - Invalid white balance temperature

500 - Internal server error

GET /video/whiteBalance/description

Get white balance range

Response

200 - OK

The response is JSON.

Name	Type	Description
whiteBalance	object	
whiteBalance.min	integer	Minimum color temperature
whiteBalance.max	integer	Maximum color temperature

PUT /video/whiteBalance/doAuto

Set current white balance automatically

Response

204 - No Content

500 - Internal server error

GET /video/whiteBalanceTint

Get white balance tint

Response

200 - OK

The response is JSON.

Name	Type	Description
whiteBalanceTint	integer	Current white balance tint

PUT /video/whiteBalanceTint

Set white balance tint

Parameters

Name	Type	Description
whiteBalanceTint (required)	integer	White balance tint to set

Response

204 - No Content

400 - Invalid white balance tint

500 - Internal server error

GET /video/whiteBalanceTint/description

Get white balance tint range

Response

200 - OK

The response is JSON.

Name	Type	Description
whiteBalanceTint	object	
whiteBalanceTint.min	integer	Minimum white balance tint
whiteBalanceTint.max	integer	Maximum white balance tint

GET /video/ndFilter

Get ND filter stop

Response

200 - OK

The response is JSON.

Name	Type	Description
stop	number	Current filter power (fStop)

501 - Not implemented for this device

PUT /video/ndFilter

Set ND filter stop

Parameters

Name	Type	Description
stop (required)	number	Filter power (fStop) to set

Response

204 - No Content

400 - Invalid ND filter stop

501 - Not implemented for this device

GET /video/supportedNDFilters

Get the list of available ND filter stops

Response

200 - List of available ND filter stops

The response is JSON.

Name	Type	Description
supportedStops	array	Array of available ND filter stops
supportedStops[i]	number	

501 - Not implemented for this device

GET /video/supportedNDFilterDisplayModes

Get the list of supported ND filter display modes

Response

200 - List of supported display modes

The response is JSON.

Name	Type	Description
supportedDisplayModes	array	Array of supported display modes
supportedDisplayModes[i]	string	Possible values are: Stop, Number, Fraction.

501 - Not implemented for this device

GET /video/ndFilter/displayMode

Get ND filter display mode on the camera

Response

200 - OK

The response is JSON.

Name	Type	Description
displayMode	string	Possible values are: Stop, Number, Fraction.

501 - Not implemented for this device

PUT /video/ndFilter/displayMode

Set ND filter display mode on the camera

Parameters

Name	Type	Description
displayMode (required)	string	Possible values are: Stop, Number, Fraction.

Response

204 - No Content

400 - Invalid display mode for ND filter

501 - Not implemented for this device

GET /video/ndFilterSelectable

Check if ND filter adjustments are selectable via a slider

Response

200 - Indicates if ND filter is selectable

The response is JSON.

Name	Type	Description
selectable	boolean	True if ND filter adjustments are selectable via a slider

501 - Not implemented for this device

GET /video/shutter

Get current shutter. Will return either shutter speed or shutter angle depending on shutter measurement in device settings

Response

200 - OK

The response is JSON.

Name	Type	Description
continuousShutterAutoExposure	boolean	Is shutter controlled by auto exposure
shutterSpeed	integer	Shutter speed value in fractions of a second (minimum is sensor frame rate)
shutterAngle	number	Shutter angle value multiplied by 100 (e.g., 180° is represented as 18000)

PUT /video/shutter

Set current shutter

Parameters

Name	Type	Description
shutterSpeed	integer	Shutter speed value in fractions of a second (minimum is sensor frame rate)
shutterAngle	number	Shutter angle value multiplied by 100 (e.g., 180° is represented as 18000)

Response

204 - No Content

500 - Internal server error

GET /video/shutter/measurement

Get the current shutter measurement mode

Response

200 - OK

The response is JSON.

Name	Type	Description
measurement	string	Possible values are: ShutterAngle, ShutterSpeed.

PUT /video/shutter/measurement

Set the shutter measurement mode

Parameters

Name	Type	Description
measurement (required)	string	Possible values are: ShutterAngle, ShutterSpeed.

Response

204 - No Content

400 - Invalid shutter measurement

500 - Internal server error

GET /video/supportedShutters

Get supported shutter settings based on current camera configuration

Response

200 - OK

The response is JSON.

Name	Type	Description
shutterAngles	array	Array of supported shutter angles
shutterAngles[i]	number	Shutter angle value multiplied by 100 (e.g., 180° is represented as 18000)
shutterSpeeds	array	Array of supported shutter speeds
shutterSpeeds[i]	integer	Shutter speed value in fractions of a second (minimum is sensor frame rate)

GET /video/flickerFreeShutters

Get flicker-free shutter settings based on current camera configuration

Response

200 - OK

The response is JSON.

Name	Type	Description
shutterAngles	array	Array of flicker-free shutter angles
shutterAngles[i]	number	Shutter angle value multiplied by 100 (e.g., 180° is represented as 18000)
shutterSpeeds	array	Array of flicker-free shutter speeds
shutterSpeeds[i]	integer	Shutter speed value in fractions of a second (minimum is sensor frame rate)

GET /video/autoExposure

Get current auto exposure mode

Response

200 - OK

The response is JSON.

Name	Type	Description
mode	string	Auto exposure mode Possible values are: Off, Continuous, OneShot.
type	string	Comma-separated list of device types in the auto exposure stack

PUT /video/autoExposure

Set auto exposure

Parameters

Name	Type	Description
mode	string	Auto exposure mode Possible values are: Off, Continuous, OneShot.
type	string	Comma-separated list of device types in the auto exposure stack

Response

204 - No Content

400 - Failed to set auto exposure mode

500 - Internal server error

GET /video/detailSharpening

Get the current state of detail sharpening

Response

200 - Current detail sharpening state

The response is JSON.

Name	Type	Description
enabled	boolean	Whether detail sharpening is enabled

501 - Not implemented for this device

PUT /video/detailSharpening

Enable or disable detail sharpening

Parameters

Name	Type	Description
enabled (required)	boolean	Enable or disable detail sharpening

Response

204 - Detail sharpening state updated

501 - Not implemented for this device

GET /video/detailSharpeningLevel

Get the current detail sharpening level

Response

200 - Current detail sharpening level

The response is JSON.

Name	Type	Description
level	string	Current detail sharpening level Possible values are: Low, Medium, High.

501 - Not implemented for this device

PUT /video/detailSharpeningLevel

Set the detail sharpening level

Parameters

Name	Type	Description
level (required)	string	Desired level of detail sharpening Possible values are: Low, Medium, High.

Response

204 - Detail sharpening level updated

400 - Invalid detail sharpening level

501 - Not implemented for this device

Camera Control API

API For controlling the Camera specific features on Blackmagic Design products

GET /camera/colorBars

Get the status of color bars display

Response

200 - Returns the current status of color bars

The response is JSON.

Name	Type	Description
enabled	boolean	Indicates if the color bars are currently enabled

PUT /camera/colorBars

Set the status of color bars display

Parameters

Name	Type	Description
enabled (required)	boolean	Enable or disable the color bars

Response

204 - Color bars status updated successfully

400 - Invalid request body

500 - Internal server error

GET /camera/programFeedDisplay

Get the status of program feed display

Response

200 - Returns the current status of program feed display

The response is JSON.

Name	Type	Description
enabled	boolean	Indicates if the program feed display is currently enabled

PUT /camera/programFeedDisplay

Set the status of program feed display

Parameters

Name	Type	Description
enabled (required)	boolean	Enable or disable the program feed display

Response

204 - Program feed display status updated successfully

400 - Invalid request body

500 - Internal server error

GET /camera/tallyStatus

Get the tally status of the camera

Response

200 - Returns the current tally status of the camera

The response is JSON.

Name	Type	Description
status	string	Current tally status of the camera Possible values are: None, Preview, Program.

PUT /camera/tallyStatus

Set the tally status of the camera

Parameters

Name	Type	Description
status (required)	string	Set the tally status of the camera Possible values are: None, Preview, Program.
timeout	integer	Optional timeout in milliseconds after which the tally will revert to its original state

Response

204 - Tally status updated successfully

400 - Invalid request body

500 - Internal server error

GET /camera/power

Get the power status of the camera

Response

200 - Returns the current power status

The response is JSON.

Name	Type	Description
source	string	Current power source of the camera Possible values are: Battery, AC, Fiber, USB, POE.
milliVolt	integer	Current voltage level in millivolts (rounded to nearest 100mV)
batteries	array	List of batteries currently connected to the camera
batteries[i]	object	
batteries[i].milliVolt	integer	Battery voltage in millivolts (rounded to nearest 100mV)
batteries[i].chargeRemainingPercent	integer	Remaining battery charge percentage
batteries[i].statusFlags	array	List of battery status flags
batteries[i].statusFlags[i]	string	Possible values are: Unknown Battery Status, Battery Is Present, Battery Is Charging, Battery Percentage Is Low, Battery Voltage Is Low, Battery Is Critically Low, Charge Remaining Percentage Is Estimated, Battery Communications Is Active, Battery Is Connected.

GET /camera/power/displayMode

Get the power display mode of the camera

Response

200 - Returns the current power display mode

The response is JSON.

Name	Type	Description
mode	string	Current power display mode Possible values are: Percentage, Voltage.

PUT /camera/power/displayMode

Set the power display mode of the camera

Parameters

Name	Type	Description
mode (required)	string	Power display mode to set Possible values are: Percentage, Voltage.

Response

204 - Power display mode updated successfully

400 - Invalid power display mode

500 - Internal server error

GET /camera/timingReferenceLock

Get the timing reference lock status

Response

200 - Returns the timing reference lock status

The response is JSON.

Name	Type	Description
locked	boolean	Indicates if timing reference is locked

GET /camera/motionSensor/euler

Get motion sensor Euler angles

Response

200 - Returns the current Euler angles from the motion sensor

The response is JSON.

Name	Type	Description
roll	number	Roll angle in radians (rotation about x-axis)
pitch	number	Pitch angle in radians (rotation about y-axis)
yaw	number	Yaw angle in radians (rotation about z-axis). Always 0 on cameras without magnetometer.

501 - Motion sensor not available on this device

GET /camera/motionSensor/horizon

Get relative horizon position

Response

200 - Returns the relative horizon position

The response is JSON.

Name	Type	Description
roll	number	Relative roll position (0.0 to 1.0, where 0.5 is centered)
pitch	number	Relative pitch position (0.0 to 1.0, where 0.5 is centered)

501 - Motion sensor not available on this device

Immersive Control API

API for controlling immersive camera settings on Blackmagic Design cameras

GET /immersive/display/{displayName}/eye

Get the current eye view for a specific display

Parameters

Name	Type	Description
{displayName} (required)	string	The display name to query (from /monitoring/display endpoint)

Response

200 - OK

The response is JSON.

Name	Type	Description
eye (required)	string	The eye view to display Possible values are: Left, Right, SideBySide, FollowLCD.

400 - Invalid display name format

404 - Display not found

422 - Failed to get eye view

501 - Not Implemented on this product

PUT /immersive/display/{displayName}/eye

Set the eye view for a specific display

Parameters

Name	Type	Description
{displayName} (required)	string	The display name to control (from /monitoring/display endpoint)

Name	Type	Description
eye (required)	string	The eye view to display Possible values are: Left, Right, SideBySide, FollowLCD.

Response

204 - No Content

400 - Invalid input or display name format

404 - Display not found

422 - Failed to set eye view

501 - Not Implemented on this product

Color Correction Control API

API For controlling the color correction on Blackmagic Design products based on DaVinci Resolve Color Corrector

GET /colorCorrection/lift

Get color correction lift

Response

200 - OK

The response is JSON.

Name	Type	Description
red	number	Red lift component. If omitted, value remains unchanged.
green	number	Green lift component. If omitted, value remains unchanged.
blue	number	Blue lift component. If omitted, value remains unchanged.
luma	number	Luma lift component. If omitted, value remains unchanged.

PUT /colorCorrection/lift

Set color correction lift

Parameters

Name	Type	Description
red	number	Red lift component. If omitted, value remains unchanged.
green	number	Green lift component. If omitted, value remains unchanged.
blue	number	Blue lift component. If omitted, value remains unchanged.
luma	number	Luma lift component. If omitted, value remains unchanged.

Response

204 - No Content

501 - Not Implemented on this product

GET /colorCorrection/gamma

Get color correction gamma

Response

200 - OK

The response is JSON.

Name	Type	Description
red	number	Red gamma component. If omitted, value remains unchanged.
green	number	Green gamma component. If omitted, value remains unchanged.
blue	number	Blue gamma component. If omitted, value remains unchanged.
luma	number	Luma gamma component. If omitted, value remains unchanged.

PUT /colorCorrection/gamma

Set color correction gamma

Parameters

Name	Type	Description
red	number	Red gamma component. If omitted, value remains unchanged.
green	number	Green gamma component. If omitted, value remains unchanged.
blue	number	Blue gamma component. If omitted, value remains unchanged.
luma	number	Luma gamma component. If omitted, value remains unchanged.

Response

204 - No Content

501 - Not Implemented on this product

GET /colorCorrection/gain

Get color correction gain

Response

200 - OK

The response is JSON.

Name	Type	Description
red	number	Red gain component. If omitted, value remains unchanged.
green	number	Green gain component. If omitted, value remains unchanged.
blue	number	Blue gain component. If omitted, value remains unchanged.
luma	number	Luma gain component. If omitted, value remains unchanged.

PUT /colorCorrection/gain

Set color correction gain

Parameters

Name	Type	Description
red	number	Red gain component. If omitted, value remains unchanged.
green	number	Green gain component. If omitted, value remains unchanged.
blue	number	Blue gain component. If omitted, value remains unchanged.
luma	number	Luma gain component. If omitted, value remains unchanged.

Response

204 - No Content

501 - Not Implemented on this product

GET /colorCorrection/offset

Get color correction offset

Response

200 - OK

The response is JSON.

Name	Type	Description
red	number	Red offset component. If omitted, value remains unchanged.
green	number	Green offset component. If omitted, value remains unchanged.
blue	number	Blue offset component. If omitted, value remains unchanged.
luma	number	Luma offset component. If omitted, value remains unchanged.

PUT /colorCorrection/offset

Set color correction offset

Parameters

Name	Type	Description
red	number	Red offset component. If omitted, value remains unchanged.
green	number	Green offset component. If omitted, value remains unchanged.
blue	number	Blue offset component. If omitted, value remains unchanged.
luma	number	Luma offset component. If omitted, value remains unchanged.

Response

204 - No Content

501 - Not Implemented on this product

GET /colorCorrection/contrast

Get color correction contrast

Response

200 - OK

The response is JSON.

Name	Type	Description
pivot	number	Contrast pivot point. If omitted, value remains unchanged.
adjust	number	Contrast adjustment. If omitted, value remains unchanged.

PUT /colorCorrection/contrast

Set color correction contrast

Parameters

Name	Type	Description
pivot	number	Contrast pivot point. If omitted, value remains unchanged.
adjust	number	Contrast adjustment. If omitted, value remains unchanged.

Response

204 - No Content

501 - Not Implemented on this product

GET /colorCorrection/color

Get color correction color properties

Response

200 - OK

The response is JSON.

Name	Type	Description
hue	number	Color hue adjustment. If omitted, value remains unchanged.
saturation	number	Color saturation adjustment. If omitted, value remains unchanged.

PUT /colorCorrection/color

Set color correction color properties

Parameters

Name	Type	Description
hue	number	Color hue adjustment. If omitted, value remains unchanged.
saturation	number	Color saturation adjustment. If omitted, value remains unchanged.

Response

204 - No Content

501 - Not Implemented on this product

GET /colorCorrection/lumaContribution

Get color correction luma contribution

Response

200 - OK

The response is JSON.

Name	Type	Description
lumaContribution	number	Luma contribution value. If omitted, value remains unchanged.

PUT /colorCorrection/lumaContribution

Set color correction luma contribution

Parameters

Name	Type	Description
lumaContribution	number	Luma contribution value. If omitted, value remains unchanged.

Response

204 - No Content

501 - Not Implemented on this product

Notification websocket - 1.1.0

Service that notifies subscribers of device state changes.

messages

Subscribe (The messages from the server/device)

Websocket Opened Message (JSON)

Name	Type	Description
.data	object	
.data.action	string	Possible values are: websocketOpened.
.type	string	Possible values are: event.

Response Message (JSON)

Name	Type	Description
.data	object	
.data.action	string	Possible values are: subscribe, unsubscribe, listSubscriptions, listProperties, websocketOpened.
.data.properties	array	

Name	Type	Description
.data.properties[i]	string	device property that the user can subscribe to. The user can either choose a value from the predefined enum, or provide a wildcard string. Possible values are: /media/workingset, /media/active, /media/slots, /system, /system/product, /system/codecFormat, /system/videoFormat, /system/format, /system/supportedFormats, /timelines/0, /timelines/0/selection, /transports/0, /transports/0/stop, /transports/0/play, /transports/0/playback, /transports/0/record, /transports/0/timecode, /transports/0/timecode/source, /transports/0/clipIndex, /slates/nextClip, /slates/lastClip, /slates/takeAutoIncrement, /monitoring/{displayName}/cleanFeed, /monitoring/{displayName}/displayLUT, /monitoring/{displayName}/zebra, /monitoring/{displayName}/focusAssist, /monitoring/{displayName}/frameGuide, /monitoring/{displayName}/frameGrids, /monitoring/{displayName}/safeArea, /monitoring/{displayName}/falseColor, /monitoring/focusAssist, /monitoring/frameGuideRatio, /monitoring/frameGrids, /monitoring/safeAreaPercent, /cloud/clips/activeUploading, /cloud/projects/active, /cloud/projects, /livestreams/0, /livestreams/0/activePlatform, /livestreams/0/available, /livestreams/platforms, /transports/0/prerecord, /transports/0/prerecord/auto, /transports/0/prerecord/maxDuration, /transports/0/proxyRecording, /audio/channel/{channelIndex}/input, /audio/channel/{channelIndex}/supportedInputs, /audio/channel/{channelIndex}/level, /audio/channel/{channelIndex}/phantomPower, /audio/channel/{channelIndex}/padding, /audio/channel/{channelIndex}/lowCutFilter, /audio/channel/{channelIndex}/available, /audio/channel/{channelIndex}/input/description, /colorCorrection/lift, /colorCorrection/gamma, /colorCorrection/gain, /colorCorrection/offset, /colorCorrection/contrast, /colorCorrection/color, /colorCorrection/lumaContribution, /lens/iris, /lens/iris/description, /lens/focus, /lens/focus/description, /lens/zoom, /lens/zoom/description, /immersive/display/{displayName}/eye, /presets, /presets/active, /camera/colorBars, /camera/programFeedDisplay, /camera/tallyStatus, /camera/power, /camera/power/displayMode, /camera/timingReferenceLock, /camera/motionSensor/euler, /camera/motionSensor/horizon, /video/iso, /video/supportedISOs, /video/gain, /video/supportedGains, /video/whiteBalance, /video/whiteBalance/description, /video/whiteBalanceTint, /video/whiteBalanceTint/description, /video/ndFilter, /video/supportedNDFilters, /video/ndFilter/displayMode, /video/supportedNDFilterDisplayModes, /video/ndFilterSelectable, /video/shutter, /video/shutter/measurement, /video/supportedShutters, /video/flickerFreeShutters, /video/autoExposure, /video/detailSharpening, /video/detailSharpeningLevel, /transports/0/clipsCreated, /transports/0/stillCaptured. Must match the pattern: .*
.data.values	object	An object with property names as the key and a property value as json. Check the next section for the device properties and their return values.
.data.success	boolean	
.data.deviceProperties	array	

Name	Type	Description
.data.deviceProperties[i]	string	device property that the user can subscribe to. The user can either choose a value from the predefined enum, or provide a wildcard string. Possible values are: /media/workingset, /media/active, /media/slots, /system, /system/product, /system/codecFormat, /system/videoFormat, /system/format, /system/supportedFormats, /timelines/0, /timelines/0/selection, /transports/0, /transports/0/stop, /transports/0/play, /transports/0/playback, /transports/0/record, /transports/0/timecode, /transports/0/timecode/source, /transports/0/clipIndex, /slates/nextClip, /slates/lastClip, /slates/takeAutoIncrement, /monitoring/{displayName}/cleanFeed, /monitoring/{displayName}/displayLUT, /monitoring/{displayName}/zebra, /monitoring/{displayName}/focusAssist, /monitoring/{displayName}/frameGuide, /monitoring/{displayName}/frameGrids, /monitoring/{displayName}/safeArea, /monitoring/{displayName}/falseColor, /monitoring/focusAssist, /monitoring/frameGuideRatio, /monitoring/frameGrids, /monitoring/safeAreaPercent, /cloud/clips/activeUploading, /cloud/projects/active, /cloud/projects, /livestreams/0, /livestreams/0/activePlatform, /livestreams/0/available, /livestreams/platforms, /transports/0/prerecord, /transports/0/prerecord/auto, /transports/0/prerecord/maxDuration, /transports/0/proxyRecording, /audio/channel/{channelIndex}/input, /audio/channel/{channelIndex}/supportedInputs, /audio/channel/{channelIndex}/level, /audio/channel/{channelIndex}/phantomPower, /audio/channel/{channelIndex}/padding, /audio/channel/{channelIndex}/lowCutFilter, /audio/channel/{channelIndex}/available, /audio/channel/{channelIndex}/input/description, /colorCorrection/lift, /colorCorrection/gamma, /colorCorrection/gain, /colorCorrection/offset, /colorCorrection/contrast, /colorCorrection/color, /colorCorrection/lumaContribution, /lens/iris, /lens/iris/description, /lens/focus, /lens/focus/description, /lens/zoom, /lens/zoom/description, /immersive/display/{displayName}/eye, /presets, /presets/active, /camera/colorBars, /camera/programFeedDisplay, /camera/tallyStatus, /camera/power, /camera/power/displayMode, /camera/timingReferenceLock, /camera/motionSensor/euler, /camera/motionSensor/horizon, /video/iso, /video/supportedISOs, /video/gain, /video/supportedGains, /video/whiteBalance, /video/whiteBalance/description, /video/whiteBalanceTint, /video/whiteBalanceTint/description, /video/ndFilter, /video/supportedNDFilters, /video/ndFilter/displayMode, /video/supportedNDFilterDisplayModes, /video/ndFilterSelectable, /video/shutter, /video/shutter/measurement, /video/supportedShutters, /video/flickerFreeShutters, /video/autoExposure, /video/detailSharpening, /video/detailSharpeningLevel, /transports/0/clipsCreated, /transports/0/stillCaptured. Must match the pattern: .*
.type	string	Possible values are: response.
.id	number	Optional parameter that repeats the id in the output for tracking messages.

Event Message (JSON)

Name	Type	Description
.data	object	
.data.action	string	Possible values are: propertyValueChanged.
.data.property	string	device property that the user can subscribe to. The user can either choose a value from the predefined enum, or provide a wildcard string. Possible values are: /media/workingset, /media/active, /media/slots, /system, /system/product, /system/codecFormat, /system/videoFormat, /system/format, /system/supportedFormats, /timelines/0, /timelines/0/selection, /transports/0, /transports/0/stop, /transports/0/play, /transports/0/playback, /transports/0/record, /transports/0/timecode, /transports/0/timecode/source, /transports/0/clipIndex, /slates/nextClip, /slates/lastClip, /slates/takeAutoIncrement, /monitoring/{displayName}/cleanFeed, /monitoring/{displayName}/displayLUT, /monitoring/{displayName}/zebra, /monitoring/{displayName}/focusAssist, /monitoring/{displayName}/frameGuide, /monitoring/{displayName}/frameGrids, /monitoring/{displayName}/safeArea, /monitoring/{displayName}/falseColor, /monitoring/focusAssist, /monitoring/frameGuideRatio, /monitoring/frameGrids, /monitoring/safeAreaPercent, /cloud/clips/activeUploading, /cloud/projects/active, /cloud/projects, /livestreams/0, /livestreams/0/activePlatform, /livestreams/0/available, /livestreams/platforms, /transports/0/prerecord, /transports/0/prerecord/auto, /transports/0/prerecord/maxDuration, /transports/0/proxyRecording, /audio/channel/{channelIndex}/input, /audio/channel/{channelIndex}/supportedInputs, /audio/channel/{channelIndex}/level, /audio/channel/{channelIndex}/phantomPower, /audio/channel/{channelIndex}/padding, /audio/channel/{channelIndex}/lowCutFilter, /audio/channel/{channelIndex}/available, /audio/channel/{channelIndex}/input/description, /colorCorrection/lift, /colorCorrection/gamma, /colorCorrection/gain, /colorCorrection/offset, /colorCorrection/contrast, /colorCorrection/color, /colorCorrection/lumaContribution, /lens/iris, /lens/iris/description, /lens/focus, /lens/focus/description, /lens/zoom, /lens/zoom/description, /immersive/display/{displayName}/eye, /presets, /presets/active, /camera/colorBars, /camera/programFeedDisplay, /camera/tallyStatus, /camera/power, /camera/power/displayMode, /camera/timingReferenceLock, /camera/motionSensor/euler, /camera/motionSensor/horizon, /video/iso, /video/supportedISOs, /video/gain, /video/supportedGains, /video/whiteBalance, /video/whiteBalance/description, /video/whiteBalanceTint, /video/whiteBalanceTint/description, /video/ndFilter, /video/supportedNDFilters, /video/ndFilter/displayMode, /video/supportedNDFilterDisplayModes, /video/ndFilterSelectable, /video/shutter, /video/shutter/measurement, /video/supportedShutters, /video/flickerFreeShutters, /video/autoExposure, /video/detailSharpening, /video/detailSharpeningLevel, /transports/0/clipsCreated, /transports/0/stillCaptured. Must match the pattern: .*
.data.value	object	An object with property names as the key and a property value as json. Check the next section for the device properties and their return values.
.type	string	Possible values are: event.

Publish (The messages that user can send to the server/device)

Response Message (JSON)

Name	Type	Description
.data	object	
.data.action	string	Possible values are: subscribe, unsubscribe, listSubscriptions, listProperties, websocketOpened.
.data.properties	array	
.data.properties[i]	string	device property that the user can subscribe to. The user can either choose a value from the predefined enum, or provide a wildcard string. Possible values are: /media/workingset, /media/active, /media/slots, /system, /system/product, /system/codecFormat, /system/videoFormat, /system/format, /system/supportedFormats, /timelines/0, /timelines/0/selection, /transports/0, /transports/0/stop, /transports/0/play, /transports/0/playback, /transports/0/record, /transports/0/timecode, /transports/0/timecode/source, /transports/0/clipIndex, /slates/nextClip, /slates/lastClip, /slates/takeAutoIncrement, /monitoring/{displayName}/cleanFeed, /monitoring/{displayName}/displayLUT, /monitoring/{displayName}/zebra, /monitoring/{displayName}/focusAssist, /monitoring/{displayName}/frameGuide, /monitoring/{displayName}/frameGrids, /monitoring/{displayName}/safeArea, /monitoring/{displayName}/falseColor, /monitoring/focusAssist, /monitoring/frameGuideRatio, /monitoring/frameGrids, /monitoring/safeAreaPercent, /cloud/clips/activeUploading, /cloud/projects/active, /cloud/projects, /livestreams/0, /livestreams/0/activePlatform, /livestreams/0/available, /livestreams/platforms, /transports/0/prerecord, /transports/0/prerecord/auto, /transports/0/prerecord/maxDuration, /transports/0/proxyRecording, /audio/channel/{channelIndex}/input, /audio/channel/{channelIndex}/supportedInputs, /audio/channel/{channelIndex}/level, /audio/channel/{channelIndex}/phantomPower, /audio/channel/{channelIndex}/padding, /audio/channel/{channelIndex}/lowCutFilter, /audio/channel/{channelIndex}/available, /audio/channel/{channelIndex}/input/description, /colorCorrection/lift, /colorCorrection/gamma, /colorCorrection/gain, /colorCorrection/offset, /colorCorrection/contrast, /colorCorrection/color, /colorCorrection/lumaContribution, /lens/iris, /lens/iris/description, /lens/focus, /lens/focus/description, /lens/zoom, /lens/zoom/description, /immersive/display/{displayName}/eye, /presets, /presets/active, /camera/colorBars, /camera/programFeedDisplay, /camera/tallyStatus, /camera/power, /camera/power/displayMode, /camera/timingReferenceLock, /camera/motionSensor/euler, /camera/motionSensor/horizon, /video/iso, /video/supportedISOs, /video/gain, /video/supportedGains, /video/whiteBalance, /video/whiteBalance/description, /video/whiteBalanceTint, /video/whiteBalanceTint/description, /video/ndFilter, /video/supportedNDFilters, /video/ndFilter/displayMode, /video/supportedNDFilterDisplayModes, /video/ndFilterSelectable, /video/shutter, /video/shutter/measurement, /video/supportedShutters, /video/flickerFreeShutters, /video/autoExposure, /video/detailSharpening, /video/detailSharpeningLevel, /transports/0/clipsCreated, /transports/0/stillCaptured. Must match the pattern: .*
.data.values	object	An object with property names as the key and a property value as json. Check the next section for the device properties and their return values.

Name	Type	Description
.data.success	boolean	
.data.deviceProperties	array	
.data.deviceProperties[i]	string	device property that the user can subscribe to. The user can either choose a value from the predefined enum, or provide a wildcard string. Possible values are: /media/workingset, /media/active, /media/slots, /system, /system/product, /system/codecFormat, /system/videoFormat, /system/format, /system/supportedFormats, /timelines/0, /timelines/0/selection, /transports/0, /transports/0/stop, /transports/0/play, /transports/0/playback, /transports/0/record, /transports/0/timecode, /transports/0/timecode/source, /transports/0/clipIndex, /slates/nextClip, /slates/lastClip, /slates/takeAutoIncrement, /monitoring/{displayName}/cleanFeed, /monitoring/{displayName}/displayLUT, /monitoring/{displayName}/zebra, /monitoring/{displayName}/focusAssist, /monitoring/{displayName}/frameGuide, /monitoring/{displayName}/frameGrids, /monitoring/{displayName}/safeArea, /monitoring/{displayName}/falseColor, /monitoring/focusAssist, /monitoring/frameGuideRatio, /monitoring/frameGrids, /monitoring/safeAreaPercent, /cloud/clips/activeUploading, /cloud/projects/active, /cloud/projects, /livestreams/0, /livestreams/0/activePlatform, /livestreams/0/available, /livestreams/platforms, /transports/0/prerecord, /transports/0/prerecord/auto, /transports/0/prerecord/maxDuration, /transports/0/proxyRecording, /audio/channel/{channelIndex}/input, /audio/channel/{channelIndex}/supportedInputs, /audio/channel/{channelIndex}/level, /audio/channel/{channelIndex}/phantomPower, /audio/channel/{channelIndex}/padding, /audio/channel/{channelIndex}/lowCutFilter, /audio/channel/{channelIndex}/available, /audio/channel/{channelIndex}/input/description, /colorCorrection/lift, /colorCorrection/gamma, /colorCorrection/gain, /colorCorrection/offset, /colorCorrection/contrast, /colorCorrection/color, /colorCorrection/lumaContribution, /lens/iris, /lens/iris/description, /lens/focus, /lens/focus/description, /lens/zoom, /lens/zoom/description, /immersive/display/{displayName}/eye, /presets, /presets/active, /camera/colorBars, /camera/programFeedDisplay, /camera/tallyStatus, /camera/power, /camera/power/displayMode, /camera/timingReferenceLock, /camera/motionSensor/euler, /camera/motionSensor/horizon, /video/iso, /video/supportedISOs, /video/gain, /video/supportedGains, /video/whiteBalance, /video/whiteBalance/description, /video/whiteBalanceTint, /video/whiteBalanceTint/description, /video/ndFilter, /video/supportedNDFilters, /video/ndFilter/displayMode, /video/supportedNDFilterDisplayModes, /video/ndFilterSelectable, /video/shutter, /video/shutter/measurement, /video/supportedShutters, /video/flickerFreeShutters, /video/autoExposure, /video/detailSharpening, /video/detailSharpeningLevel, /transports/0/clipsCreated, /transports/0/stillCaptured. Must match the pattern: .*
.type	string	Possible values are: response.
.id	number	Optional parameter that repeats the id in the output for tracking messages.

Device Properties

/media/workingset

The value JSON returned via the eventResponse when the `/media/workingset` property changes on the device:

Name	Type	Description
.size	integer	The fixed size of this device's working set.
.workingset	array	Array of devices within the working set. null if no device is present within the given working set slot.
.workingset[i]		

/media/active

The value JSON returned via the eventResponse when the `/media/active` property changes on the device:

Name	Type	Description
.workingsetIndex	integer	Working set index of the active media device.
.deviceName	string	Internal device name of this media device.

/media/slots

The value JSON returned via the eventResponse when the `/media/slots` property changes on the device:

Name	Type	Description
	array	
[i]	object	
[i].index	integer	The index of this slot in the device.
[i].type	string	The type of media slot. Possible values are: USB, SDCard, CFX, SSD, CFast, EmptyModule, MediaModule, NetworkShare, InternalDrive, Invalid.

/system

The value JSON returned via the eventResponse when the `/system` property changes on the device:

Name	Type	Description
.codecFormat	object	Codec format configuration.
.codecFormat.codec	string	Codec format serialised as a string.
.codecFormat.container	string	Multimedia container format.
.videoFormat	object	Currently selected video format.
.videoFormat.frameRate	string	Frame rate. Possible values are: 23.98, 24.00, 24, 25.00, 25, 29.97, 30.00, 30, 47.95, 48.00, 48, 50.00, 50, 59.94, 60.00, 60, 119.88, 120.00, 120.
.videoFormat.height	number	Height dimension of video format.
.videoFormat.width	number	Width dimension of video format.
.videoFormat.interlaced	boolean	Is the display format interlaced?.
.videoFormat.name	string	Video format serialised as a string.

/system/product

Product information.

The value JSON returned via the eventResponse when the `/system/product` property changes on the device:

Name	Type	Description
.deviceName	string	Name of device as displayed in Setup.
.productName	string	Device's product name.
.softwareVersion	string	Software version running on device.

/system/codecFormat

Codec format configuration.

The value JSON returned via the eventResponse when the `/system/codecFormat` property changes on the device:

Name	Type	Description
.codec	string	Codec format serialised as a string.
.container	string	Multimedia container format.

/system/videoFormat

Currently selected video format.

The value JSON returned via the eventResponse when the `/system/videoFormat` property changes on the device:

Name	Type	Description
.frameRate	string	Frame rate. Possible values are: 23.98, 24.00, 24, 25.00, 25, 29.97, 30.00, 30, 47.95, 48.00, 48, 50.00, 50, 59.94, 60.00, 60, 119.88, 120.00, 120.
.height	number	Height dimension of video format.
.width	number	Width dimension of video format.
.interlaced	boolean	Is the display format interlaced?.
.name	string	Video format serialised as a string.

/system/format

The value JSON returned via the eventResponse when the `/system/format` property changes on the device:

Name	Type	Description
.codec	string	Codec format serialised as a string.
.frameRate	string	Frame rate. Possible values are: 23.98, 24.00, 24, 25.00, 25, 29.97, 30.00, 30, 47.95, 48.00, 48, 50.00, 50, 59.94, 60.00, 60, 119.88, 120.00, 120.
.maxOffSpeedFrameRate	number	
.minOffSpeedFrameRate	number	
.offSpeedEnabled	boolean	
.offSpeedFrameRate	number	
.recordResolution	object	
.recordResolution.height	number	Height of the resolution.
.recordResolution.width	number	Width of the resolution.
.sensorResolution	object	
.sensorResolution.height	number	Height of the resolution.
.sensorResolution.width	number	Width of the resolution.

/system/supportedFormats

The value JSON returned via the eventResponse when the `/system/supportedFormats` property changes on the device:

Name	Type	Description
.supportedFormats	array	
.supportedFormats[i]	object	
.supportedFormats[i].codecs	array	
.supportedFormats[i].codecs[i]	string	
.supportedFormats[i].frameRates	array	
.supportedFormats[i].frameRates[i]	string	Possible values are: 23.98, 24.00, 24, 25.00, 25, 29.97, 30.00, 30, 47.95, 48.00, 48, 50.00, 50, 59.94, 60.00, 60, 119.88, 120.00, 120.
.supportedFormats[i]. maxOffSpeedFrameRate	number	
.supportedFormats[i]. minOffSpeedFrameRate	number	
.supportedFormats[i]. recordResolution	object	
.supportedFormats[i]. recordResolution.height	number	Height of the resolution.
.supportedFormats[i]. recordResolution.width	number	Width of the resolution.
.supportedFormats[i]. sensorResolution	object	
.supportedFormats[i]. sensorResolution.height	number	Height of the resolution.
.supportedFormats[i]. sensorResolution.width	number	Width of the resolution.

/timelines/0

The value JSON returned via the eventResponse when the `/timelines/0` property changes on the device:

Name	Type	Description
.clips	array	
.clips[i]	object	Timeline clip.
.clips[i].clipUniqueId	integer	Unique identifier used to identify this media clip. If the same media clip is added to the timeline multiple times, each timeline clip has the same clipUniqueId
.clips[i].frameCount	integer	Duration of timeline clip in frames, the number of frames in this clip on the timeline.
.clips[i].durationTimecode	string	Duration of the timeline clip in timecode format serialised as string. This will differ to durationTimecode reported in /clips for this clipUniqueId if clipIn or frameCount was specified when adding this clip to the timeline.
.clips[i].clipIn	string	In frame offset for the clip on the timeline, where 0 is the first frame of the on-disk clip.
.clips[i].inTimecode	string	Clip timecode of the first frame of this timeline clip serialised as string (clip startTimecode + clipIn frames).
.clips[i].timelineIn	string	Timeline position of the first frame of this clip, where 0 is the first frame of the timeline.
.clips[i].timelineInTimecode	string	Timeline timecode of the first frame of this timeline clip serialised as string.

/timelines/0/selection

Timeline selection.

The value JSON returned via the eventResponse when the `/timelines/0/selection` property changes on the device:

Name	Type	Description
.clipIds	array	Array of clip IDs (clipUniqueId) currently selected for the remote selection timeline. A clip ID can be included multiple times. Empty array indicates there is no selection.
.clipIds[i]	integer	Clip unique ID included in selection.

/transports/0

The value JSON returned via the eventResponse when the `/transports/0` property changes on the device:

Name	Type	Description
.mode	string	Transport mode. Possible values are: InputPreview, InputRecord, Output.

/transports/0/stop

true when transport mode is InputPreview or when in Output mode and speed is 0.

The value JSON returned via the eventResponse when the `/transports/0/stop` property changes on the device:

Name	Type	Description
	boolean	true when transport mode is InputPreview or when in Output mode and speed is 0.

/transports/0/play

True when transport is in Output mode and speed is non-zero.

The value JSON returned via the eventResponse when the `/transports/0/play` property changes on the device:

Name	Type	Description
	boolean	True when transport is in Output mode and speed is non-zero.

/transports/0/playback

The value JSON returned via the eventResponse when the `/transports/0/playback` property changes on the device:

Name	Type	Description
.type	string	Possible values are: Play, Jog, Shuttle, Var.
.loop	boolean	When true playback loops from the end of the timeline to the beginning of the timeline.
.singleClip	boolean	When true playback loops from the end of the current clip to the beginning of the current clip.
.speed	number	Playback speed, 1.0 for normal forward playback
.position	integer	Playback position on the timeline in units of video frames.

/transports/0/record

The value JSON returned via the eventResponse when the `/transports/0/record` property changes on the device:

Name	Type	Description
.recording	boolean	Is transport in Input Record mode.

/transports/0/timecode

The value JSON returned via the eventResponse when the `/transports/0/timecode` property changes on the device:

Name	Type	Description
.display	string	The display timecode serialised as a string.
.timeline	string	The timeline timecode serialised as a string.

/transports/0/timecode/source

The value JSON returned via the eventResponse when the `/transports/0/timecode/source` property changes on the device:

Name	Type	Description
.source	string	Possible values are: Timeline, Clip.
.timecodeInputSource	string	Possible values are: Internal, Embedded, External, TimeOfDay, Preset, LastClip, Unknown.

/transports/0/clipIndex

The value JSON returned via the eventResponse when the `/transports/0/clipIndex` property changes on the device:

Name	Type	Description
.clipIndex	number | null	The 0-based index of the clip being played on the timeline. null when there is no timeline or an empty timeline.

/slates/nextClip

The value JSON returned via the eventResponse when the `/slates/nextClip` property changes on the device:

Name	Type	Description
.clip	object	
.clip.clipName	string	
.clip.reel	integer	
.clip.scene	string	
.clip.sceneLocation	string	Possible values are: Interior, Exterior.
.clip.sceneTime	string	Possible values are: Day, Night.
.clip.shotType	string	Possible values are: None, WS, MS, MCU, CU, BCU, ECU.
.clip.slateFor	string	Possible values are: Clip, Next Clip.
.clip.take	integer	
.clip.takeType	string	Possible values are: None, PU, VFX, SER.
.lens	object	
.lens.lensType	string	
.lens.iris	string	
.lens.focalLength	string	
.lens.distance	string	
.lens.filter	string	
.project	object	
.project.projectName	string	
.project.director	string	
.project.camera	string	
.project.cameraOperator	string	

/slates/lastClip

The value JSON returned via the eventResponse when the `/slates/lastClip` property changes on the device:

Name	Type	Description
.clip	object	
.clip.clipName	string	
.clip.reel	integer	
.clip.scene	string	
.clip.sceneLocation	string	Possible values are: Interior, Exterior.
.clip.sceneTime	string	Possible values are: Day, Night.
.clip.shotType	string	Possible values are: None, WS, MS, MCU, CU, BCU, ECU.
.clip.slateFor	string	Possible values are: Clip, Next Clip.
.clip.take	integer	
.clip.takeType	string	Possible values are: None, PU, VFX, SER.
.clip.goodTake	boolean	
.lens	object	
.lens.lensType	string	
.lens.iris	string	
.lens.focalLength	string	
.lens.distance	string	
.lens.filter	string	
.project	object	
.project.projectName	string	
.project.director	string	
.project.camera	string	
.project.cameraOperator	string	

/slates/takeAutoIncrement

The value JSON returned via the eventResponse when the `/slates/takeAutoIncrement` property changes on the device:

Name	Type	Description
.enabled	boolean	True if take auto-increment is enabled.

/monitoring/{displayName}/cleanFeed

The value JSON returned via the eventResponse when the `/monitoring/{displayName}/cleanFeed` property changes on the device:

Name	Type	Description
.enabled	boolean	Indicates if the feature is enabled.

/monitoring/{displayName}/displayLUT

The value JSON returned via the eventResponse when the `/monitoring/{displayName}/displayLUT` property changes on the device:

Name	Type	Description
.enabled	boolean	Indicates if the feature is enabled.

/monitoring/{displayName}/zebra

The value JSON returned via the eventResponse when the `/monitoring/{displayName}/zebra` property changes on the device:

Name	Type	Description
.enabled	boolean	Indicates if the feature is enabled.

/monitoring/{displayName}/focusAssist

The value JSON returned via the eventResponse when the `/monitoring/{displayName}/focusAssist` property changes on the device:

Name	Type	Description
.enabled	boolean	Indicates if the feature is enabled.

/monitoring/{displayName}/frameGuide

The value JSON returned via the eventResponse when the `/monitoring/{displayName}/frameGuide` property changes on the device:

Name	Type	Description
.enabled	boolean	Indicates if the feature is enabled.

/monitoring/{displayName}/frameGrids

The value JSON returned via the eventResponse when the `/monitoring/{displayName}/frameGrids` property changes on the device:

Name	Type	Description
.enabled	boolean	Indicates if the feature is enabled.

/monitoring/{displayName}/safeArea

The value JSON returned via the eventResponse when the `/monitoring/{displayName}/safeArea` property changes on the device:

Name	Type	Description
.enabled	boolean	Indicates if the feature is enabled.

/monitoring/{displayName}/falseColor

The value JSON returned via the eventResponse when the `/monitoring/{displayName}/falseColor` property changes on the device:

Name	Type	Description
.enabled	boolean	Indicates if the feature is enabled.

/monitoring/focusAssist

The value JSON returned via the eventResponse when the `/monitoring/focusAssist` property changes on the device:

Name	Type	Description
.mode	string	Possible values are: Peak, ColoredLines.
.color	string	Possible values are: Red, Green, Blue, White, Black.
.intensity	integer	

/monitoring/frameGuideRatio

The value JSON returned via the eventResponse when the `/monitoring/frameGuideRatio` property changes on the device:

Name	Type	Description
.ratio	string	

/monitoring/frameGrids

The value JSON returned via the eventResponse when the `/monitoring/frameGrids` property changes on the device:

Name	Type	Description
.frameGrids	array	
.frameGrids[i]	string	Possible values are: Thirds, Crosshair, Dot, Horizon.

/monitoring/safeAreaPercent

The value JSON returned via the eventResponse when the `/monitoring/safeAreaPercent` property changes on the device:

Name	Type	Description
.percent	integer	Safe area coverage percentage.

/cloud/clips/activeUploading

The value JSON returned via the eventResponse when the `/cloud/clips/activeUploading` property changes on the device:

Name	Type	Description
	array	
[i]	object	
[i].path	string	REST path to the clip (deviceName/path).
[i].projectID	integer	ID of the project this clip is associated with.
[i].status	object	
[i].status.projectID	integer	ID of the project this status is for.
[i].status.outOfSpace	boolean	True if the project has run out of space in the cloud.
[i].status.growingFile	boolean	True if the clip is still being recorded/modified.
[i].status.originalUploadState	string	Upload state of the original clip. Possible values are: Unqueued, Paused, Queued, Uploading, Uploaded, Failed, Unknown.
[i].status.proxyUploadState	string	Upload state of the proxy clip. Possible values are: Unqueued, Paused, Queued, Uploading, Uploaded, Failed, Unknown.
[i].status.originalClipTotalSize	integer	Total size of the original clip in bytes.
[i].status.proxyClipTotalSize	integer	Total size of the proxy clip in bytes.
[i].status.originalClipCompletedSize	integer	Completed upload size of the original clip in bytes.
[i].status.proxyClipCompletedSize	integer	Completed upload size of the proxy clip in bytes.
[i].status.secsRemaining	integer	Estimated seconds remaining until upload is completed. Value of -1 means calculation in progress.

/cloud/projects/active

The value JSON returned via the eventResponse when the `/cloud/projects/active` property changes on the device:

Name	Type	Description
.libraryID	string	Cloud ID of the library containing this project.
.name	string	Name of the project.
.private	boolean	True if the project is private.
.shared	boolean	True if the project is shared.
.clips	array	List of clips associated with the project.
.clips[i]	string	
.status	object	
.status.numClipsRequested	integer	Number of clips requested for upload.
.status.numClipsComplete	integer	Number of clips that have completed uploading.
.status.uploadPercent	integer	Percentage of upload completion.
.status.numClipsPaused	integer	Number of clips paused in upload queue.
.status.outOfSpace	boolean	True if the project has run out of space in the cloud.
.status.secsRemaining	integer	Estimated seconds remaining until upload is completed. Value of -1 means calculation in progress.
.status.currentByteRate	integer	Current byte rate of the upload process.

/cloud/projects

The value JSON returned via the eventResponse when the `/cloud/projects` property changes on the device:

Name	Type	Description
	array	
[i]	object	
[i].libraryID	string	Cloud ID of the library containing this project.
[i].name	string	Name of the project.
[i].private	boolean	True if the project is private.
[i].shared	boolean	True if the project is shared.
[i].clips	array	List of clips associated with the project.
[i].clips[i]	string	
[i].status	object	
[i].status.numClipsRequested	integer	Number of clips requested for upload.
[i].status.numClipsComplete	integer	Number of clips that have completed uploading.
[i].status.uploadPercent	integer	Percentage of upload completion.
[i].status.numClipsPaused	integer	Number of clips paused in upload queue.
[i].status.outOfSpace	boolean	True if the project has run out of space in the cloud.
[i].status.secsRemaining	integer	Estimated seconds remaining until upload is completed. Value of -1 means calculation in progress.
[i].status.currentByteRate	integer	Current byte rate of the upload process.

/livestreams/0

The value JSON returned via the eventResponse when the `/livestreams/0` property changes on the device:

Name	Type	Description
.status	string	Possible values are: Idle, Connecting, Streaming, Flushing, Interrupted, Disconnecting.
.bitrate	integer	Current bitrate (bps).
.effectiveVideoFormat	string	Effective video format for the livestream, serialised as a string.
.duration	integer	Current stream duration in seconds. Absent if livestream is idle.
.cache	integer	Current stream cache usage percentage.

/livestreams/0/activePlatform

The value JSON returned via the eventResponse when the `/livestreams/0/activePlatform` property changes on the device:

Name	Type	Description
.platform	string	Platform name.
.server	string	The platform's server name, or "Custom" when the URL is customizable.
.key	string	Stream key. Assumed to be empty if missing.
.passphrase	string	Passphrase. Only included for SRT streams.
.quality	string	Quality level name.
.url	string	Livestream destination. Only included when URL is customizable.

/livestreams/0/available

The value JSON returned via the eventResponse when the `/livestreams/0/available` property changes on the device:

Name	Type	Description
.available	boolean	True if livestreaming is currently available.
.reasons	array	Reasons why livestreaming is unavailable (empty if available is true).
.reasons[i]	string	Possible values are: not-supported, unsupported-format, in-playback, pending-format-transition, unexpected-reason.

/livestreams/platforms

The value JSON returned via the eventResponse when the `/livestreams/platforms` property changes on the device:

Name	Type	Description
	array	
[i]	string	Platform name.

/transports/0/prerecord

The value JSON returned via the eventResponse when the `/transports/0/prerecord` property changes on the device:

Name	Type	Description
.prerecording	boolean	True when prerecording is currently active (either from auto mode or one-shot trigger).
.duration	integer	The elapsed duration of the active prerecord buffer in seconds. Returns 0 when not prerecording.

/transports/0/prerecord/auto

The value JSON returned via the eventResponse when the `/transports/0/prerecord/auto` property changes on the device:

Name	Type	Description
.autoEnabled	boolean	Enable or disable automatic prerecord mode. When enabled, prerecord automatically activates when the device is ready.

/transports/0/prerecord/maxDuration

The value JSON returned via the eventResponse when the `/transports/0/prerecord/maxDuration` property changes on the device:

Name	Type	Description
.maxDuration	integer	Maximum prerecord duration in seconds. Must be one of the values returned by /transports/0/prerecord/supportedMaxDurations.

/transports/0/proxyRecording

The value JSON returned via the eventResponse when the `/transports/0/proxyRecording` property changes on the device:

Name	Type	Description
.enabled	boolean	True when proxy recording is enabled.

/audio/channel/{channelIndex}/input

Get the audio input (source and type) for the selected channel

The value JSON returned via the eventResponse when the `/audio/channel/{channelIndex}/input` property changes on the device:

Name	Type	Description
.input	string	Audio input source and type

/audio/channel/{channelIndex}/supportedInputs

The value JSON returned via the eventResponse when the `/audio/channel/{channelIndex}/supportedInputs` property changes on the device:

Name	Type	Description
	array	
[i]	object	
[i].input	string	Input name
[i].available	boolean	Is the input available to be switched into from the current input for the selected channel

/audio/channel/{channelIndex}/level

Get the audio input level for the selected channel

The value JSON returned via the eventResponse when the `/audio/channel/{channelIndex}/level` property changes on the device:

Name	Type	Description
.gain	number	Gain value in dB
.normalised	number	Normalised level value between 0.0 and 1.0

/audio/channel/{channelIndex}/phantomPower

Get the audio input phantom power status for the selected channel

The value JSON returned via the eventResponse when the `/audio/channel/{channelIndex}/phantomPower` property changes on the device:

Name	Type	Description
.enabled	boolean	Phantom power enabled state

/audio/channel/{channelIndex}/padding

Get the audio input padding status for the selected channel

The value JSON returned via the eventResponse when the `/audio/channel/{channelIndex}/padding` property changes on the device:

Name	Type	Description
.enabled	boolean	Padding enabled state

/audio/channel/{channelIndex}/lowCutFilter

Get the audio input low cut filter status for the selected channel

The value JSON returned via the eventResponse when the `/audio/channel/{channelIndex}/lowCutFilter` property changes on the device:

Name	Type	Description
.enabled	boolean	Low cut filter enabled state

/audio/channel/{channelIndex}/available

Get the audio input's current availability for the selected channel. If unavailable, the source will be muted

The value JSON returned via the eventResponse when the `/audio/channel/{channelIndex}/available` property changes on the device:

Name	Type	Description
.available	boolean	Whether the input is currently available

/audio/channel/{channelIndex}/input/description

Description of the current input of the selected channel

The value JSON returned via the eventResponse when the `/audio/channel/{channelIndex}/input/description` property changes on the device:

Name	Type	Description
.description	object	
.description.gainRange	object	
.description.gainRange.Min	number	The minimum gain value in dB
.description.gainRange.Max	number	The maximum gain value in dB
.description.capabilities	object	
.description.capabilities.PhantomPower	boolean	Input supports setting of phantom power
.description.capabilities.LowCutFilter	boolean	Input supports setting of low cut filter
.description.capabilities.Padding	object	
.description.capabilities.Padding.available	boolean	Input supports setting of padding
.description.capabilities.Padding.forced	boolean	Padding is forced to be set for the input
.description.capabilities.Padding.value	number	An object with property names as the key and a property value as json. Check the next section for the device properties and their return values.

/colorCorrection/lift

Get color correction lift

The value JSON returned via the eventResponse when the `/colorCorrection/lift` property changes on the device:

Name	Type	Description
.red	number	Red lift component
.green	number	Green lift component
.blue	number	Blue lift component
.luma	number	Luma lift component

/colorCorrection/gamma

Get color correction gamma

The value JSON returned via the eventResponse when the `/colorCorrection/gamma` property changes on the device:

Name	Type	Description
.red	number	Red gamma component
.green	number	Green gamma component
.blue	number	Blue gamma component
.luma	number	Luma gamma component

/colorCorrection/gain

Get color correction gain

The value JSON returned via the eventResponse when the `/colorCorrection/gain` property changes on the device:

Name	Type	Description
.red	number	Red gain component
.green	number	Green gain component
.blue	number	Blue gain component
.luma	number	Luma gain component

/colorCorrection/offset

Get color correction offset

The value JSON returned via the eventResponse when the `/colorCorrection/offset` property changes on the device:

Name	Type	Description
.red	number	Red offset component
.green	number	Green offset component
.blue	number	Blue offset component
.luma	number	Luma offset component

/colorCorrection/contrast

Get color correction contrast

The value JSON returned via the eventResponse when the `/colorCorrection/contrast` property changes on the device:

Name	Type	Description
.pivot	number	Contrast pivot point
.adjust	number	Contrast adjustment

/colorCorrection/color

Get color correction color properties

The value JSON returned via the eventResponse when the `/colorCorrection/color` property changes on the device:

Name	Type	Description
.hue	number	Color hue adjustment
.saturation	number	Color saturation adjustment

/colorCorrection/lumaContribution

Get color correction luma contribution

The value JSON returned via the eventResponse when the `/colorCorrection/lumaContribution` property changes on the device:

Name	Type	Description
.lumaContribution	number	Luma contribution value

/lens/iris

Get lens' aperture

The value JSON returned via the eventResponse when the `/lens/iris` property changes on the device:

Name	Type	Description
.continuousApertureAutoExposure	boolean	Is Aperture controlled by auto exposure
.apertureStop	number	Aperture stop value
.normalised	number	Normalised value
.apertureNumber	integer	Aperture number

/lens/iris/description

Get detailed description of lens' iris capabilities

The value JSON returned via the eventResponse when the `/lens/iris/description` property changes on the device:

Name	Type	Description
.controllable	boolean	If the iris can be controlled
.apertureStop	object	
.apertureStop.min	number	Minimum aperture stop
.apertureStop.max	number	Maximum aperture stop

/lens/focus

Get lens' focus

The value JSON returned via the eventResponse when the `/lens/focus` property changes on the device:

Name	Type	Description
.normalised	number	Normalised value

/lens/focus/description

Get detailed description of lens' focus capabilities

The value JSON returned via the eventResponse when the `/lens/focus/description` property changes on the device:

Name	Type	Description
.controllable	boolean	If the focus can be controlled
.focusDistance	object	
.focusDistance.adjustable	boolean	If focus distance is adjustable
.focusDistance.min	number	Minimum focus distance
.focusDistance.max	number	Maximum focus distance

/lens/zoom

Get lens' zoom

The value JSON returned via the eventResponse when the `/lens/zoom` property changes on the device:

Name	Type	Description
.focalLength	integer	Focal length in mm
.normalised	number	Normalised value

/lens/zoom/description

Get detailed description of lens' zoom capabilities

The value JSON returned via the eventResponse when the `/lens/zoom/description` property changes on the device:

Name	Type	Description
.controllable	boolean	If the zoom can be controlled
.focalLength	object	
.focalLength.adjustable	boolean	If focal length is adjustable
.focalLength.min	integer	Minimum focal length
.focalLength.max	integer	Maximum focal length

/immersive/display/{displayName}/eye

Get the current eye view for a specific display

The value JSON returned via the eventResponse when the `/immersive/display/{displayName}/eye` property changes on the device:

Name	Type	Description
.eye	string	The eye view to display Possible values are: Left, Right, SideBySide, FollowLCD.

/presets

Get the list of the presets on the camera

The value JSON returned via the eventResponse when the `/presets` property changes on the device:

Name	Type	Description
.presets	array	List of the presets on the camera (.cset files)
.presets[i]	string	

/presets/active

Get the currently active preset on the camera

The value JSON returned via the eventResponse when the `/presets/active` property changes on the device:

Name	Type	Description
.preset	string	Name of the active preset (with .cset extension, or 'default')

/camera/colorBars

Get the status of color bars display

The value JSON returned via the eventResponse when the `/camera/colorBars` property changes on the device:

Name	Type	Description
.enabled	boolean	Indicates if the color bars are currently enabled

/camera/programFeedDisplay

Get the status of program feed display

The value JSON returned via the eventResponse when the `/camera/programFeedDisplay` property changes on the device:

Name	Type	Description
.enabled	boolean	Indicates if the program feed display is currently enabled

/camera/tallyStatus

Get the tally status of the camera

The value JSON returned via the eventResponse when the `/camera/tallyStatus` property changes on the device:

Name	Type	Description
.status	string	Current tally status of the camera Possible values are: None, Preview, Program.

/camera/power

Get the power status of the camera

The value JSON returned via the eventResponse when the `/camera/power` property changes on the device:

Name	Type	Description
.source	string	Current power source of the camera Possible values are: Battery, AC, Fiber, USB, POE.
.milliVolt	integer	Current voltage level in millivolts (rounded to nearest 100mV)
.batteries	array	
.batteries[i]	object	
.batteries[i].milliVolt	integer	Battery voltage in millivolts (rounded to nearest 100mV)
.batteries[i]. chargeRemainingPercent	integer	Remaining battery charge percentage
.batteries[i].statusFlags	array	List of battery status flags
.batteries[i].statusFlags[i]	string	Possible values are: Unknown Battery Status, Battery Is Present, Battery Is Charging, Battery Percentage Is Low, Battery Voltage Is Low, Battery Is Critically Low, Charge Remaining Percentage Is Estimated, Battery Communications Is Active, Battery Is Connected.

/camera/power/displayMode

Get the power display mode of the camera

The value JSON returned via the eventResponse when the `/camera/power/displayMode` property changes on the device:

Name	Type	Description
.mode	string	Current power display mode Possible values are: Percentage, Voltage.

/camera/timingReferenceLock

Get the timing reference lock status

The value JSON returned via the eventResponse when the `/camera/timingReferenceLock` property changes on the device:

Name	Type	Description
.locked	boolean	Indicates if timing reference is locked

/camera/motionSensor/euler

Get motion sensor Euler angles (roll, pitch, yaw) in radians. Only available on cameras with motion sensors.

The value JSON returned via the eventResponse when the `/camera/motionSensor/euler` property changes on the device:

Name	Type	Description
.roll	number	Roll angle in radians (rotation about x-axis)
.pitch	number	Pitch angle in radians (rotation about y-axis)
.yaw	number	Yaw angle in radians (rotation about z-axis). Always 0 on cameras without magnetometer.

/camera/motionSensor/horizon

Get relative horizon position normalized for display. Values are 0.0-1.0 where 0.5 is centered, representing ±40° range. Only available on cameras with motion sensors.

The value JSON returned via the eventResponse when the `/camera/motionSensor/horizon` property changes on the device:

Name	Type	Description
.roll	number	Relative roll position (0.0 to 1.0, where 0.5 is centered)
.pitch	number	Relative pitch position (0.0 to 1.0, where 0.5 is centered)

/video/iso

Get current ISO

The value JSON returned via the eventResponse when the `/video/iso` property changes on the device:

Name	Type	Description
.iso	integer	Current ISO value

/video/supportedISOs

Get the list of supported ISO settings

The value JSON returned via the eventResponse when the `/video/supportedISOs` property changes on the device:

Name	Type	Description
.supportedISOs	array	Array of supported ISO values
.supportedISOs[i]	integer	

/video/gain

Get current gain value in decibels

The value JSON returned via the eventResponse when the `/video/gain` property changes on the device:

Name	Type	Description
.gain	integer	Current gain value in decibels

/video/supportedGains

Get the list of supported gain settings in decibels

The value JSON returned via the eventResponse when the `/video/supportedGains` property changes on the device:

Name	Type	Description
.supportedGains	array	Array of supported gain values in decibels
.supportedGains[i]	integer	

/video/whiteBalance

Get current white balance

The value JSON returned via the eventResponse when the `/video/whiteBalance` property changes on the device:

Name	Type	Description
.whiteBalance	integer	Current white balance

/video/whiteBalance/description

Get white balance range

The value JSON returned via the eventResponse when the `/video/whiteBalance/description` property changes on the device:

Name	Type	Description
.whiteBalance	object	
.whiteBalance.min	integer	Minimum color temperature
.whiteBalance.max	integer	Maximum color temperature

/video/whiteBalanceTint

Get white balance tint

The value JSON returned via the eventResponse when the `/video/whiteBalanceTint` property changes on the device:

Name	Type	Description
.whiteBalanceTint	integer	Current white balance tint

/video/whiteBalanceTint/description

Get white balance tint range

The value JSON returned via the eventResponse when the `/video/whiteBalanceTint/description` property changes on the device:

Name	Type	Description
.whiteBalanceTint	object	
.whiteBalanceTint.min	integer	Minimum white balance tint
.whiteBalanceTint.max	integer	Maximum white balance tint

/video/ndFilter

Get ND filter stop

The value JSON returned via the eventResponse when the `/video/ndFilter` property changes on the device:

Name	Type	Description
.stop	number	Current filter power (fStop)

/video/supportedNDFilters

Get the list of available ND filter stops

The value JSON returned via the eventResponse when the `/video/supportedNDFilters` property changes on the device:

Name	Type	Description
.supportedStops	array	Array of available ND filter stops
.supportedStops[i]	number	

/video/ndFilter/displayMode

Get ND filter display mode on the camera

The value JSON returned via the eventResponse when the `/video/ndFilter/displayMode` property changes on the device:

Name	Type	Description
.displayMode	string	ND filter display mode Possible values are: Stop, Number, Fraction.

/video/supportedNDFilterDisplayModes

Get the list of supported ND filter display modes

The value JSON returned via the eventResponse when the `/video/supportedNDFilterDisplayModes` property changes on the device:

Name	Type	Description
.supportedDisplayModes	array	Array of supported display modes
.supportedDisplayModes[i]	string	Possible values are: Stop, Number, Fraction.

/video/ndFilterSelectable

Check if ND filter adjustments are selectable via a slider

The value JSON returned via the eventResponse when the `/video/ndFilterSelectable` property changes on the device:

Name	Type	Description
.selectable	boolean	True if ND filter adjustments are selectable via a slider

/video/shutter

Get current shutter. Will return either shutter speed or shutter angle depending on shutter measurement in device settings

The value JSON returned via the eventResponse when the `/video/shutter` property changes on the device:

Name	Type	Description
.continuousShutterAutoExposure	boolean	Is shutter controlled by auto exposure
.shutterSpeed	integer	Shutter speed value in fractions of a second (minimum is sensor frame rate)
.shutterAngle	integer	Shutter angle value multiplied by 100 (e.g., 180° is represented as 18000)

/video/shutter/measurement

Get the current shutter measurement mode

The value JSON returned via the eventResponse when the `/video/shutter/measurement` property changes on the device:

Name	Type	Description
.measurement	string	Current shutter measurement mode Possible values are: ShutterAngle, ShutterSpeed.

/video/supportedShutters

Get supported shutter settings based on current camera configuration

The value JSON returned via the eventResponse when the `/video/supportedShutters` property changes on the device:

Name	Type	Description
.shutterAngles	array	Array of supported shutter angles
.shutterAngles[i]	number	
.shutterSpeeds	array	Array of flicker-free shutter speeds
.shutterSpeeds[i]	integer	

/video/flickerFreeShutters

Get flicker-free shutter settings based on current camera configuration

The value JSON returned via the eventResponse when the `/video/flickerFreeShutters` property changes on the device:

Name	Type	Description
.shutterAngles	array	Array of flicker-free shutter angles
.shutterAngles[i]	number	
.shutterSpeeds	array	Array of flicker-free shutter speeds
.shutterSpeeds[i]	integer	

/video/autoExposure

Get current auto exposure mode

The value JSON returned via the eventResponse when the `/video/autoExposure` property changes on the device:

Name	Type	Description
.mode	string	Auto exposure mode Possible values are: Off, Continuous, OneShot.
.type	string	Comma-separated list of device types in the auto exposure stack

/video/detailSharpening

Get the current state of detail sharpening

The value JSON returned via the eventResponse when the `/video/detailSharpening` property changes on the device:

Name	Type	Description
.enabled	boolean	Whether detail sharpening is enabled

/video/detailSharpeningLevel

Get the current detail sharpening level

The value JSON returned via the eventResponse when the `/video/detailSharpeningLevel` property changes on the device:

Name	Type	Description
.level	string	Current detail sharpening level of supported shutter speeds Possible values are: Low, Medium, High.

/transports/0/clipsCreated

Notification when clips are created after recording stops

The value JSON returned via the eventResponse when the `/transports/0/clipsCreated` property changes on the device:

Name	Type	Description
.clips	array	Array of file paths for the created clips
.clips[i]	string	

/transports/0/stillCaptured

Notification when a still image is captured

The value JSON returned via the eventResponse when the `/transports/0/stillCaptured` property changes on the device:

Name	Type	Description
.path	string	File path of the captured still image

Blackmagic Bluetooth Camera Control

Blackmagic cameras with Bluetooth LE implement a variety of features and commands that allow users to control their cameras wirelessly. Developers have full access to these features for their custom applications.

The following services and characteristics describe the full range of communication options that are available to the developer.

Service: Device Information Service

UUID: 180A

Characteristics

Camera Manufacturer
UUID: 2A29

Read the name of the manufacturer (always “Blackmagic Design”).

Camera Model
UUID: 2A24

Read the name of the camera model (“URSA Broadcast G2”).

Service: Blackmagic Camera Service

UUID: 291D567A-6D75-11E6-8B77-86F30CA893D3

Characteristics

Outgoing Camera Control (encrypted)
UUID: 5DD3465F-1AEE-4299-8493-D2ECA2F8E1BB

Send Camera Control messages
These messages are identical to those described in the Blackmagic SDI Camera Control Protocol section below. Please read that section for a list of supported messages and required formatting information.

For an example of how packets are structured, please see the ‘example protocol packets’ section in this document.

Incoming Camera Control (encrypted)
UUID: B864E140-76A0-416A-BF30-5876504537D9

Request notifications for this characteristic to receive Camera Control messages from the camera.

These messages are identical to those described in the Blackmagic SDI Camera Control Protocol section below. Please read that section for a list of supported messages and required formatting information.

Timecode (encrypted)
UUID: 6D8F2110-86F1-41BF-9AFB-451D87E976C8

Request notifications for this characteristic to receive timecode updates.

Timecode (HH:MM:SS:mm) is represented by a 32-bit BCD number:
(eg. 09:12:53:10 = 0x09125310)

Camera Status (encrypted)

UUID: 7FE8691D-95DC-4FC5-8ABD-CA74339B51B9

Request notifications for this characteristic to receive camera status updates.

The camera status is represented by flags contained in an 8-bit integer:

None	= 0x00
Camera Power On	= 0x01
Connected	= 0x02
Paired	= 0x04
Versions Verified	= 0x08
Initial Payload Received	= 0x10
Camera Ready	= 0x20

Send a value of 0x00 to power a connected camera off.

Send a value of 0x01 to power a connected camera on.

Device Name

UUID: FFAC0C52-C9FB-41A0-B063-CC76282EB89C

Send a device name to the camera (max. 32 characters).

The camera will display this name in the Bluetooth Setup Menu.

Protocol Version

UUID: 8F1FD018-B508-456F-8F82-3D392BEE2706

Read this value to determine the camera's supported CCU protocol version.

NOTE Encrypted characteristics can only be used once a device has successfully bonded or paired with the Blackmagic Camera. Once a connection has been established, any attempt to write to an encrypted characteristic will initiate bonding. For example, writing a 'Camera Power On' (0x01) message to the Camera Status characteristic.

Once bonding is initiated, the camera will display a 6-digit pin in the Bluetooth Setup Menu. Enter this pin on your device to establish an encrypted connection. The device will now be able to read, write and receive notifications from encrypted characteristics.

Blackmagic SDI and Bluetooth Camera Control Protocol

Version 1.6.2

If you are a software developer you can use the Blackmagic SDI and Bluetooth Camera Control Protocol to construct devices that integrate with our products. Here at Blackmagic Design, our approach is to open up our protocols and we eagerly look forward to seeing what you come up with!

Overview

This document describes an extensible protocol for sending a unidirectional stream of small control messages embedded in the non-active picture region of a digital video stream. The video stream containing the protocol stream may be broadcast to a number of devices. Device addressing is used to allow the sender to specify which device each message is directed to.

Assumptions

Alignment and padding constraints are explicitly described in the protocol document. Bit fields are packed from LSB first. Message groups, individual messages and command headers are defined as, and can be assumed to be, 32 bit aligned.

Blanking Encoding

A message group is encoded into a SMPTE 291M packet with DID/SDID x51/x53 in the active region of VANC line 16.

Message Grouping

Up to 32 messages may be concatenated and transmitted in one blanking packet up to a maximum of 255 bytes payload. Under most circumstances, this should allow all messages to be sent with a maximum of one frame latency.

If the transmitting device queues more bytes of message packets than can be sent in a single frame, it should use heuristics to determine which packets to prioritize and send immediately. Lower priority messages can be delayed to later frames, or dropped entirely as appropriate.

Abstract Message Packet Format

Every message packet consists of a three byte header followed by an optional variable length data block. The maximum packet size is 64 bytes.

Destination device (uint8)	Device addresses are represented as an 8 bit unsigned integer. Individual devices are numbered 0 through 254 with the value 255 reserved to indicate a broadcast message to all devices.
Command length (uint8)	The command length is an 8 bit unsigned integer which specifies the length of the included command data. The length does NOT include the length of the header or any trailing padding bytes.
Command id (uint8)	The command id is an 8 bit unsigned integer which indicates the message type being sent. Receiving devices should ignore any commands that they do not understand. Commands 0 through 127 are reserved for commands that apply to multiple types of devices. Commands 128 through 255 are device specific.
Reserved (uint8)	This byte is reserved for alignment and expansion purposes. It should be set to zero.

Command data (uint8[])	The command data may contain between 0 and 60 bytes of data. The format of the data section is defined by the command itself.
Padding (uint8[])	Messages must be padded up to a 32 bit boundary with 0x0 bytes. Any padding bytes are NOT included in the command length.

Receiving devices should use the destination device address and or the command identifier to determine which messages to process. The receiver should use the command length to skip irrelevant or unknown commands and should be careful to skip the implicit padding as well.

Defined Commands

Command 0 : change configuration

Category (uint8)	The category number specifies one of up to 256 configuration categories available on the device.
Parameter (uint8)	The parameter number specifies one of 256 potential configuration parameters available on the device. Parameters 0 through 127 are device specific parameters. Parameters 128 though 255 are reserved for parameters that apply to multiple types of devices.
Data type (uint8)	The data type specifies the type of the remaining data. The packet length is used to determine the number of elements in the message. Each message must contain an integral number of data elements.

Currently defined values are:

0: void/boolean	A void value is represented as a boolean array of length zero. The data field is a 8 bit value with 0 meaning false and all other values meaning true.
1: signed byte	Data elements are signed bytes
2: signed 16 bit integer	Data elements are signed 16 bit values
3: signed 32 bit integer	Data elements are signed 32 bit values
4: signed 64 bit integer	Data elements are signed 64 bit values
5: UTF-8 string	Data elements represent a UTF-8 string with no terminating character.

Data types 6 through 127 are reserved.

128: signed 5.11 fixed point	Data elements are signed 16 bit integers representing a real number with 5 bits for the integer component and 11 bits for the fractional component. The fixed point representation is equal to the real value multiplied by 2^11. The representable range is from -16.0 to 15.9995 (15 + 2047/2048).

Data types 129 through 255 are available for device specific purposes.

Operation type (uint8)	The operation type specifies what action to perform on the specified parameter. Currently defined values are:

0: assign value	The supplied values are assigned to the specified parameter. Each element will be clamped according to its valid range. A void parameter may only be 'assigned' an empty list of boolean type. This operation will trigger the action associated with that parameter. A boolean value may be assigned the value zero for false, and any other value for true.
1: offset/toggle value	Each value specifies signed offsets of the same type to be added to the current parameter values. The resulting parameter value will be clamped according to their valid range. It is not valid to apply an offset to a void value. Applying any offset other than zero to a boolean value will invert that value.
Operation types 2 through 127 are reserved.	
Operation types 128 through 255 are available for device specific purposes.	
Data (void)	The data field is 0 or more bytes as determined by the data type and number of elements.

The category, parameter, data type and operation type partition a 24 bit operation space.

Group	ID	Parameter	Type	Index	Minimum	Maximum	Interpretation
Lens	0.0	Focus	fixed16	–	0.0	1.0	0.0 = near, 1.0 = far
	0.1	Instantaneous autofocus	void	–	–	–	trigger instantaneous autofocus
	0.2	Aperture (f-stop)	fixed16	–	-1.0	16.0	Aperture Value (where fnumber = sqrt(2^AV))
	0.3	Aperture (normalised)	fixed16	–	0.0	1.0	0.0 = smallest, 1.0 = largest
	0.4	Aperture (ordinal)	int16	–	0	n	Steps through available aperture values from minimum (0) to maximum (n)
	0.5	Instantaneous auto aperture	void	–	–	–	trigger instantaneous auto aperture
	0.6	Optical image stabilisation	boolean	–	–	–	true = enabled, false = disabled
	0.7	Set absolute zoom (mm)	int16	–	0	max	Move to specified focal length in mm, from minimum (0) to maximum (max)
	0.8	Set absolute zoom (normalised)	fixed16	–	0.0	1.0	Move to specified focal length: 0.0 = wide, 1.0 = tele
	0.9	Set continuous zoom (speed)	fixed16	–	-1.0	+1.0	Start/stop zooming at specified rate: -1.0 = zoom wider fast, 0.0 = stop, +1 = zoom tele fast

Group	ID	Parameter	Type	Index	Minimum	Maximum	Interpretation
Video	1.0	Video mode	int8	[0] = frame rate	–	–	fps as integer (eg 24, 25, 30, 50, 60)
				[1] = M-rate	–	–	0 = regular, 1 = M-rate
				[2] = dimensions	–	–	0 = NTSC, 1 = PAL, 2 = 720, 3 = 1080, 4 = 2kDCI, 5 = 2k16:9, 6 = UHD, 7 = 3k Anamorphic, 8 = 4k DCI, 9 = 4k 16:9, 10 = 4.6k 2.4:1, 11 = 4.6k
				[3] = interlaced	–	–	0 = progressive, 1 = interlaced
				[4] = Color space	–	–	0 = YUV
	1.1	Gain (up to Camera 4.9)	int8		1	128	1x, 2x, 4x, 8x, 16x, 32x, 64x, 128x gain
	1.2	Manual White Balance	int16	[0] = color temp	2500	10000	Color temperature in K
			int16	[1] = tint	-50	50	tint
	1.3	Set auto WB	void	–	–	–	Calculate and set auto white balance
	1.4	Restore auto WB	void	–	–	–	Use latest auto white balance setting
	1.5	Exposure (us)	int32		1	42000	time in us
	1.6	Exposure (ordinal)	int16	–	0	n	Steps through available exposure values from minimum (0) to maximum (n)
	1.7	Dynamic Range Mode	int8 enum	–	0	2	0 = film, 1 = video, 2 = extended video
	1.8	Video sharpening level	int8 enum	–	0	3	0 = off, 1 = low, 2 = medium, 3 = high
	1.9	Recording format	int16	[0] = file frame rate	–	–	fps as integer (eg 24, 25, 30, 50, 60, 120)
				[1] = sensor frame rate	–	–	fps as integer, valid when sensor-off-speed set (eg 24, 25, 30, 33, 48, 50, 60, 120), no change will be performed if this value is set to 0
				[2] = frame width	–	–	in pixels
				[3] = frame height	–	–	in pixels
				[4] = flags	–	–	[0] = file-M-rate
					–	–	[1] = sensor-M-rate, valid when sensor-off-speed-set
					–	–	[2] = sensor-off-speed
					–	–	[3] = interlaced
					–	–	[4] = windowed mode
	1.10	Set auto exposure mode	int8	–	0	4	0 = Manual Trigger, 1 = Iris, 2 = Shutter, 3 = Iris + Shutter, 4 = Shutter + Iris
	1.11	Shutter angle	int32	–	100	36000	Shutter angle in degrees, multiplied by 100
	1.12	Shutter speed	int32	–	Current sensor frame rate	5000	Shutter speed value as a fraction of 1, so 50 for 1/50th of a second
	1.13	Gain	int8	–	-128	127	Gain in decibel (dB)
	1.14	ISO	int32	–	0	2147483647	ISO value
	1.15	Display LUT	int8	[0] = selected LUT	–	–	0 = None, 1 = Custom, 2 = film to video, 3 = film to extended video
				[1] = enabled or not	–	–	0 = Not enabled, 1 = Enabled

Group	ID	Parameter	Type	Index	Minimum	Maximum	Interpretation
	1.16	ND Filter Stop	fixed16	[0] = stop	0.0	15.0	filter power, as f-stop
				[1] = display mode	–	–	0 = stop 1 = density 2 = transmittance
Audio	2.0	Mic level	fixed16	–	0.0	1.0	0.0 = minimum, 1.0 = maximum
	2.1	Headphone level	fixed16	–	0.1	1.0	0.0 = minimum, 1.0 = maximum
	2.2	Headphone program mix	fixed16	–	0.1	1.0	0.0 = minimum, 1.0 = maximum
	2.3	Speaker level	fixed16	–	0.1	1.0	0.0 = minimum, 1.0 = maximum
	2.4	Input type	int8	–	0	3	0 = internal mic, 1 = line level input, 2 = low mic level input, 3 = high mic level input
	2.5	Input levels	fixed16	[0] ch0	0.0	1.0	0.0 = minimum, 1.0 = maximum
				[1] ch1	0.0	1.0	0.0 = minimum, 1.0 = maximum
	2.6	Phantom power	boolean	–	–	–	true = powered, false = not powered
Output	3.0	Overlay enables	uint16 bit field	[0] = bit field	–	–	bit flags: [0] = display status, [1] = display frame guides [2] = clean feed Some cameras don't allow separate control of frame guides and status overlays.
			uint16 bit field	[1] = target displays bit field	–	–	bit flags: [0] = LCD [1] = HDMI [2] = EVF [3] = Main SDI [4] = Front SDI
	3.1	Frame guides style (Camera 3.x)	int8	–	0	8	0 = HDTV, 1 = 4:3, 2 = 2.4:1, 3 = 2.39:1, 4 = 2.35:1, 5 = 1.85:1, 6 = thirds
	3.2	Frame guides opacity (Camera 3.x)	fixed16	–	0.1	1.0	0.0 = transparent, 1.0 = opaque
	3.3	Overlays (replaces .1 and .2 above from Cameras 4.0)	int8	[0] = frame guides style	–	–	0 = off, 1 = 2.4:1, 2 = 2.39:1, 3 = 2.35:1, 4 = 1.85:1, 5 = 16:9, 6 = 14:9, 7 = 4:3, 8 = 2:1, 9 = 4:5, 10 = 1:1
				[1] = frame guide opacity	0	100	0 = transparent, 100 = opaque
				[2] = safe area percentage	0	100	percentage of full frame used by safe area guide (0 means off)
				[3] = grid style	–	–	bit flags: [0] = display thirds, [1] = display cross hairs, [2] = display center dot, [3] = display horizon

Group	ID	Parameter	Type	Index	Minimum	Maximum	Interpretation
Display	4.0	Brightness	fixed16	–	0.0	1.0	0.0 = minimum, 1.0 = maximum
	4.1	Exposure and focus tools	uint16 bit field	[0] = bit field	–	–	bit flags: [0] = Zebra [1] = Focus Assist [2] = False Color
			uint16 bit field	[1] = target displays bit field	–	–	bit flags: [0] = LCD [1] = HDMI [2] = EVF [3] = Main SDI [4] = Front SDI
	4.2	Zebra level	fixed16	–	0.0	1.0	0.0 = minimum, 1.0 = maximum
	4.3	Peaking level	fixed16	–	0.0	1.0	0.0 = minimum, 1.0 = maximum
	4.4	Color bar enable	int8	–	0	30	0 = disable bars, 1-30 = enable bars with timeout (seconds)
	4.5	Focus Assist	int8	[0] = focus assist method	–	–	0 = Peak, 1 = Colored lines
				[1] = focus line color	–	–	0 = Red, 1 = Green, 2 = Blue, 3 = White, 4 = Black
	4.6	Program return feed enable	int8	–	0	30	0 = disable, 1-30 = enable with timeout (seconds)
	4.7	Timecode Source	signed byte	[0] = source	–	–	0 = Clip, 1 = Timecode
Tally	5.0	Tally brightness	fixed16	–	0.0	1.0	Sets the tally front and tally rear brightness to the same level. 0.0 = minimum, 1.0 = maximum
	5.1	Front tally brightness	fixed16	–	0.0	1.0	Sets the tally front brightness. 0.0 = minimum, 1.0 = maximum
	5.2	Rear tally brightness	fixed16	–	0.0	1.0	Sets the tally rear brightness. 0.0 = minimum, 1.0 = maximum Tally rear brightness cannot be turned off
Reference	6.0	Source	int8 enum	–	0	2	0 = internal, 1 = program, 2 = external
	6.1	Offset	int32	–	–	–	+/- offset in pixels
Confi-guration	7.0	Real Time Clock	int32	[0] time	–	–	BCD - HHMMSSFF (UCT)
				[1] date	–	–	BCD - YYYYMMDD
	7.1	System language	string	[0-1]	–	–	ISO-639-1 two character language code
	7.2	Timezone	int32	–	–	–	Minutes offset from UTC
	7.3	Location	int64	[0] latitude	–	–	BCD - s0DDdddddddddddd where s is the sign: 0 = north (+), 1 = south (-); DD degrees, ddddddddddddd decimal degrees
				[1] longitude	–	–	BCD - sDDDddddddddddddd where s is the sign: 0 = west (-), 1 = east (+); DDD degrees, ddddddddddddd decimal degrees

Group	ID	Parameter	Type	Index	Minimum	Maximum	Interpretation
Color Correction	8.0	Lift Adjust	fixed16	[0] red	-2.0	2.0	default 0.0
				[1] green	-2.0	2.0	default 0.0
				[2] blue	-2.0	2.0	default 0.0
				[3] luma	-2.0	2.0	default 0.0
	8.1	Gamma Adjust	fixed16	[0] red	-4.0	4.0	default 0.0
				[1] green	-4.0	4.0	default 0.0
				[2] blue	-4.0	4.0	default 0.0
				[3] luma	-4.0	4.0	default 0.0
	8.2	Gain Adjust	fixed16	[0] red	0.0	16.0	default 1.0
				[1] green	0.0	16.0	default 1.0
				[2] blue	0.0	16.0	default 1.0
				[3] luma	0.0	16.0	default 1.0
	8.3	Offset Adjust	fixed16	[0] red	-8.0	8.0	default 0.0
				[1] green	-8.0	8.0	default 0.0
				[2] blue	-8.0	8.0	default 0.0
				[3] luma	-8.0	8.0	default 0.0
	8.4	Contrast Adjust	fixed16	[0] pivot	0.0	1.0	default 0.5
				[1] adj	0.0	2.0	default 1.0
	8.5	Luma mix	fixed16	–	0.0	1.0	default 1.0
	8.6	Color Adjust	fixed16	[0] hue	-1.0	1.0	default 0.0
				[1] sat	0.0	2.0	default 1.0
	8.7	Correction Reset Default	void	–	–	–	reset to defaults

Group	ID	Parameter	Type	Index	Minimum	Maximum	Interpretation
Media	10.0	Codec	int8 enum	[0] = basic codec	–	–	0 = CinemaDNG, 1 = DNxHD, 2 = ProRes, 3 = Blackmagic RAW
				[1] = code variant	–	–	CinemaDNG: 0 = uncompressed, 1 = lossy 3:1, 2 = lossy 4:1
					–	–	ProRes: 0 = HQ, 1 = 422, 2 = LT, 3 = Proxy, 4 = 444, 5 = 444XQ
					–	–	Blackmagic RAW: 0 = Q0, 7 = Q1, 8 = Q3, 1 = Q5, 2 = 3:1, 3 = 5:1, 4 = 8:1, 5 = 12:1
	10.1	Transport mode	int8	[0] = mode	–	–	0 = Preview, 1 = Play, 2 = Record
				[1] = speed	–	–	-ve = multiple speeds backwards, 0 = pause, +ve = multiple speeds forwards
				[2] = flags	–	–	1<<0 = loop, 1<<1 = play all, 1<<5 = disk1 active, 1<<6 = disk2 active, 1<<7 = time-lapse recording
				[3] = slot 1 storage medium	–	–	0 = CFast card, 1 = SD, 2 = SSD Recorder
				[4] = slot 2 storage medium	–	–	0 = CFast card, 1 = SD, 2 = SSD Recorder
	10.2	Playback Control	int8 enum	[0] = clip	–	–	0 = Previous, 1 = Next
	10.5	Stream	bool	[0] = enabled	–	–	true = enabled, false = disabled
	10.6	Stream Information	void bool	[0] = enabled	–	–	true = enabled, false = disabled
	10.7	Stream Display 3D LUT	void bool	[0] = enabled	–	–	true = enabled, false = disabled
PTZ Control	11.0	Pan/Tilt Velocity	fixed 16	[0] = pan velocity	-1.0	1.0	-1.0 = full speed left, 1.0 = full speed right
				[1] = tilt velocity	-1.0	1.0	-1.0 = full speed down, 1.0 = full speed up
	11.1	Memory Preset	int8 enum	[0] = preset command	–	–	0 = reset, 1 = store location, 2 = recall location
			int8	[1] = preset slot	0	5	–

Example Protocol Packets

Operation	Packet Length	Byte															
		0	1	2	3	4	5	6	7	8	9	10	11	12	13	14	15
		header				command			data								
		destination	length	command	reserved	category	parameter	type	operation								
trigger instantaneous auto focus on camera 4	8	4	4	0	0	0	1	0	0								
turn on OIS on all cameras	12	255	5	0	0	0	6	0	0	1	0	0	0				
set exposure to 10 ms on camera 4 (10 ms = 10000 us = 0x00002710)	12	4	8	0	0	1	5	3	0	0x10	0x27	0x00	0x00				
add 15% to zebra level (15 % = 0.15 f = 0x0133 fp)	12	4	6	0	0	4	2	128	1	0x33	0x01	0	0				
select 1080p 23.98 mode on all cameras	16	255	9	0	0	1	0	1	0	24	1	3	0	0	0	0	0
subtract 0.3 from gamma adjust for green & blue (-0.3 ~= 0xfd9a fp)	16	4	12	0	0	8	1	128	1	0	0	0x9a	0xfd	0x9a	0xfd	0	0
all operations combined	76	4	4	0	0	0	1	0	0	255	5	0	0	0	6	0	0
		1	0	0	0	4	8	0	0	1	5	3	0	0x10	0x27	0x00	0x00
		4	6	0	0	4	2	128	1	0x33	0x01	0	0	255	9	0	0
		1	0	1	0	24	1	3	0	0	0	0	0	4	12	0	0
		8	1	128	1	0	0	0x9a	0xfd	0x9a	0xfd	0	0				

Blackmagic Tally Control Protocol

Version 1.0 (30/04/14)

This section is for third party developers or anybody who may wish to add support for the Blackmagic Tally Control Protocol to their products or system. It describes the protocol for sending tally information embedded in the non-active picture region of a digital video stream.

Data Flow

A master device such as a broadcast switcher embeds tally information into its program feed which is broadcast to a number of slave devices such as cameras or camera controllers. The output from the slave devices is typically fed back to the master device, but may also be sent to a video monitor.

The primary flow of tally information is from the master device to the slaves. Each slave device may use its device id to extract and display the relevant tally information.

Slave devices pass through the tally packet on their output and update the monitor tally status, so that monitor devices connected to that individual output may display tally status without knowledge of the device id they are monitoring.

Assumptions

Any data alignment/padding is explicit in the protocol. Bit fields are packed from LSB first.

Blanking Encoding

One tally control packet may be sent per video frame. Packets are encoded as a SMPTE 291M packet with DID/SDID x51/x52 in the active region of VANC line 15. A tally control packet may contain up to 256 bytes of tally information.

Packet Format

Each tally status consists of 4 bits of information:

```
uint4
 bit 0:    program tally status (0=off, 1=on)
 bit 1:    preview tally status (0=off, 1=on)
 bit 2-3:  reserved (0x0)
```

The first byte of the tally packet contains the monitor device tally status and a version number.

Subsequent bytes of the tally packet contain tally status for pairs of slave devices. The master device sends tally status for the number of devices configured/supported, up to a maximum of 510.

```
struct tally
    uint8
     bit 0:    monitor device program tally status (0=off, 1=on)
     bit 1:    monitor device preview tally status (0=off, 1=on)
     bit 2-3:  reserved (0b00)
     bit 4-7:  protocol version (0b0000)
    uint8[0]
     bit 0:    slave device 1 program tally status (0=off, 1=on)
     bit 1:    slave device 1 device preview tally status (0=off, 1=on)
     bit 2-3:  reserved (0b00)
     bit 4:    slave device 2 program tally status (0=off, 1=on)
     bit 5:    slave device 2 preview tally status (0=off, 1=on)
     bit 6-7:  reserved (0b00)
```

uint8[1]

bit 0: slave device 3 program tally status (0=off, 1=on)
bit 1: slave device 3 device preview tally status (0=off, 1=on)
bit 2-3: reserved (0b00)
bit 4: slave device 4 program tally status (0=off, 1=on)
bit 5: slave device 4 preview tally status (0=off, 1=on)
bit 6-7: reserved (0b00)

. . .

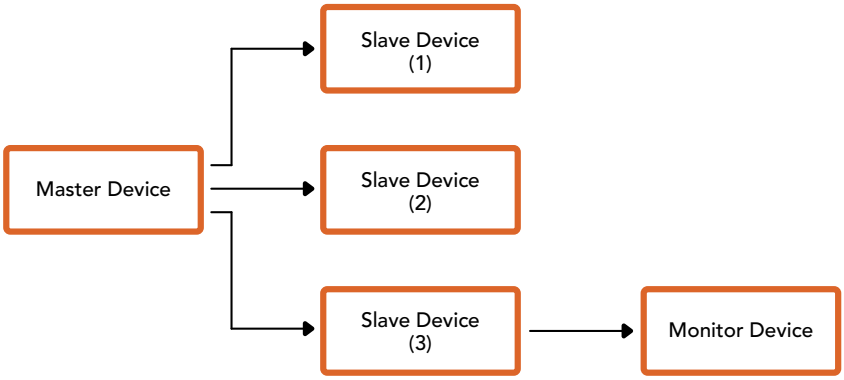

Byte	7 MSB	6	5	4	3	2	1	0 LSB
0	Version (0b0)	Version (0b0)	Version (0b0)	Version (0b0)	Reserved (0b0)	Reserved (0b0)	Monitor Preview	Monitor Program
1	Reserved (0b0)	Reserved (0b0)	Slave 1 Preview	Slave 1 Program	Reserved (0b0)	Reserved (0b0)	Slave 0 Preview	Slave 0 Program
2	Reserved (0b0)	Reserved (0b0)	Slave 3 Preview	Slave 3 Program	Reserved (0b0)	Reserved (0b0)	Slave 2 Preview	Slave 2 Program
3	...							

Help

The fastest way to obtain help is to go to the Blackmagic Design online support pages and check the latest support material available for your camera.

Blackmagic Design Online Support Pages

The latest manual, software and support notes can be found at the Blackmagic Design support center at www.blackmagicdesign.com/support.

Contacting Blackmagic Design Support

If you can't find the help you need in our support material, please use the "Send us an email" button on the support page to email a support request. Alternatively, click on the "Find your local support team" button on the support page and call your nearest Blackmagic Design support office.

Checking the Software Version Currently Installed

To check which version of Blackmagic Camera Utility software is installed on your computer, open the About Blackmagic Camera Utility window.

- On Mac, open Blackmagic Camera Utility from the Applications folder. Select About Blackmagic Camera Utility from the application menu to reveal the version number.
- On Windows, open Blackmagic Camera Utility from your Start menu or Start Screen. Click on the Help menu and select About Blackmagic Camera Utility to reveal the version number.

How to Get the Latest Software Updates

After checking the version of Blackmagic Camera Utility software installed on your computer, please visit the Blackmagic Design support center at www.blackmagicdesign.com/support to check for the latest updates. While it is usually a good idea to run the latest updates, it is wise to avoid updating any software if you are in the middle of an important project.

Regulatory Notices

Disposal of waste of electrical and electronic equipment within the European union.

The symbol on the product indicates that this equipment must not be disposed of with other waste materials. In order to dispose of your waste equipment, it must be handed over to a designated collection point for recycling. The separate collection and recycling of your waste equipment at the time of disposal will help conserve natural resources and ensure that it is recycled in a manner that protects human health and the environment. For more information about where you can drop off your waste equipment for recycling, please contact your local city recycling office or the dealer from whom you purchased the product.

This equipment has been tested and found to comply with the limits for a Class A digital device, pursuant to Part 15 of the FCC rules. These limits are designed to provide reasonable protection against harmful interference when the equipment is operated in a commercial environment. This equipment generates, uses, and can radiate radio frequency energy and, if not installed and used in accordance with the instructions, may cause harmful interference to radio communications. Operation of this product in a residential area is likely to cause harmful interference, in which case the user will be required to correct the interference at personal expense.

Operation is subject to the following two conditions:

1. This device may not cause harmful interference.
2. This device must accept any interference received, including interference that may cause undesired operation.

R-R-BMD-20210915001
R-R-BMD-20200421002
R-R-BMD-20200916001
R-R-BMD-20200916002
R-REM-BMD-201803004
R-REM-BMD-201803003
MSIP-REM-BMD-201612001

ICES-3 (A)
NMB-3 (A)

ISED Canada Statement

This device complies with Canadian standards for Class A digital apparatus.

Any modifications or use of this product outside its intended use could void compliance to these standards.

This equipment has been tested for compliance with the intended use in a commercial environment.

Bluetooth®

The URSA Broadcast G2 is a Bluetooth wireless technology enabled product.

Contains Transmitter Module FCC ID: QOQBGM113

This equipment complies with FCC radiation exposure limits set forth for an uncontrolled environment.

Contains Transmitter Module IC: 5123A-BGM113

This device complies with Industry Canada's license-exempt RSS standards and exception from routine SAR evaluation limits given in RSS-102 Issue 5.

Certified for Japan, certificate number: 209-J00204. This equipment contains specified radio equipment that has been certified to the Technical Regulation Conformity Certification under the Radio law.

This module has certification in South Korea, KC certification number: MSIP-CRM-BGT-BGM113

Hereby, Blackmagic Design declares that the URSA Broadcast G2 using wideband transmission systems in 2.4 GHz ISM band is in compliance with Directive 2014/53/EU

The full text of the EU declaration of conformity is available from compliance@blackmagicdesign.com

Safety Information

The supplied AC to 12V DC power supply for Blackmagic URSA Broadcast G2 and the IEC power cable for Blackmagic Studio Fiber Converter, must be connected to a mains socket outlet with a protective earth connection.

Blackmagic URSA Broadcast G2 and Camera Fiber Converter are suitable for use in tropical locations with an ambient temperature of up to 40°C. Blackmagic Studio Fiber Converter is suitable for use in tropical locations with an ambient temperature of up to 50°C

Ensure that adequate ventilation is provided around the Blackmagic Studio Fiber Converter and Camera Fiber Converter so that ventilation is not restricted. When rack mounting the Studio Fiber Converter, ensure that the ventilation is not restricted by adjacent equipment.

No operator serviceable parts inside Blackmagic URSA Broadcast G2, Camera Fiber Converter or Studio Fiber Converter. Refer servicing to your local Blackmagic Design service center.

State of California statement

This product can expose you to chemicals such as trace amounts of polybrominated biphenyls within plastic parts, which is known to the state of California to cause cancer and birth defects or other reproductive harm.

For more information go to www.P65Warnings.ca.gov.

Blackmagic URSA Broadcast G2

During sunny conditions, consider shading of the camera to prevent exposure of the camera or Lithium battery to extended periods of sunlight. Keep Lithium batteries away from all sources of heat.

The 12V DC output connector is suitable to provide power to the Blackmagic URSA Viewfinder or Blackmagic URSA Studio Viewfinder. When connecting other accessories to this connector, ensure that the power consumption is less than 18W.

Blackmagic Studio Fiber Converter

To reduce the risk of electric shock, do not expose this equipment to dripping or splashing. Use only at altitudes not more than 2000m above sea level.

Blackmagic Camera Fiber Converter

Only use the converter when connected to the Blackmagic Studio Fiber Converter. Under normal use, the converter is designed to receive hazardous voltages from the Blackmagic Studio Fiber Converter.

Warranty

Limited Warranty

Blackmagic Design warrants that this product will be free from defects in materials and workmanship for a period of 12 months from the date of purchase. If a product proves to be defective during this warranty period, Blackmagic Design, at its option, either will repair the defective product without charge for parts and labor, or will provide a replacement in exchange for the defective product.

In order to obtain service under this warranty, you the Customer, must notify Blackmagic Design of the defect before the expiration of the warranty period and make suitable arrangements for the performance of service. The Customer shall be responsible for packaging and shipping the defective product to a designated service center nominated by Blackmagic Design, with shipping charges pre paid. Customer shall be responsible for paying all shipping charges, insurance, duties, taxes, and any other charges for products returned to us for any reason.

This warranty shall not apply to any defect, failure or damage caused by improper use or improper or inadequate maintenance and care. Blackmagic Design shall not be obliged under this warranty: a) to repair damage resulting from attempts by personnel other than Blackmagic Design representatives to install, repair or service the product, b) to repair damage resulting from improper use or connection to incompatible equipment, c) to repair any damage or malfunction caused by the use of non Blackmagic Design parts or supplies, or d) to service a product that has been modified or integrated with other products when the effect of such a modification or integration increases the time or difficulty of servicing the product.

Exposing URSA Viewfinder to direct sunlight could damage the viewfinder display as the viewfinder optics act as a magnifying glass. Image retention or burn-in could happen on OLED panels when static or high contrast images, such as frame guides, are displayed on the panels for extended periods. To avoid this, ensure the IR sensor for face detection is not covered deliberately and disconnect the viewfinder when not in use for prolonged periods. Image retention is not covered by this product warranty.

THIS WARRANTY IS GIVEN BY BLACKMAGIC DESIGN IN LIEU OF ANY OTHER WARRANTIES, EXPRESS OR IMPLIED. BLACKMAGIC DESIGN AND ITS VENDORS DISCLAIM ANY IMPLIED WARRANTIES OF MERCHANTABILITY OR FITNESS FOR A PARTICULAR PURPOSE. BLACKMAGIC DESIGN'S RESPONSIBILITY TO REPAIR OR REPLACE DEFECTIVE PRODUCTS DURING THE WARRANTY PERIOD IS THE WHOLE AND EXCLUSIVE REMEDY PROVIDED TO THE CUSTOMER. BLACKMAGIC DESIGN WILL NOT BE LIABLE FOR ANY INDIRECT, SPECIAL, INCIDENTAL OR CONSEQUENTIAL DAMAGES IRRESPECTIVE OF WHETHER BLACKMAGIC DESIGN OR THE VENDOR HAS ADVANCE NOTICE OF THE POSSIBILITY OF SUCH DAMAGES. BLACKMAGIC DESIGN IS NOT LIABLE FOR ANY ILLEGAL USE OF EQUIPMENT BY CUSTOMER. BLACKMAGIC IS NOT LIABLE FOR ANY DAMAGES RESULTING FROM USE OF THIS PRODUCT. USER OPERATES THIS PRODUCT AT OWN RISK.

© Copyright 2025 Blackmagic Design. All rights reserved. 'Blackmagic Design', 'URSA', 'DeckLink', 'HDLink', 'Workgroup Videohub', 'Multibridge Pro', 'Multibridge Extreme', 'Intensity' and 'Leading the creative video revolution' are registered trademarks in the US and other countries. All other company and product names may be trademarks of the respective companies with which they are associated.